Introduction LHC Machine Protection

Rüdiger Schmidt

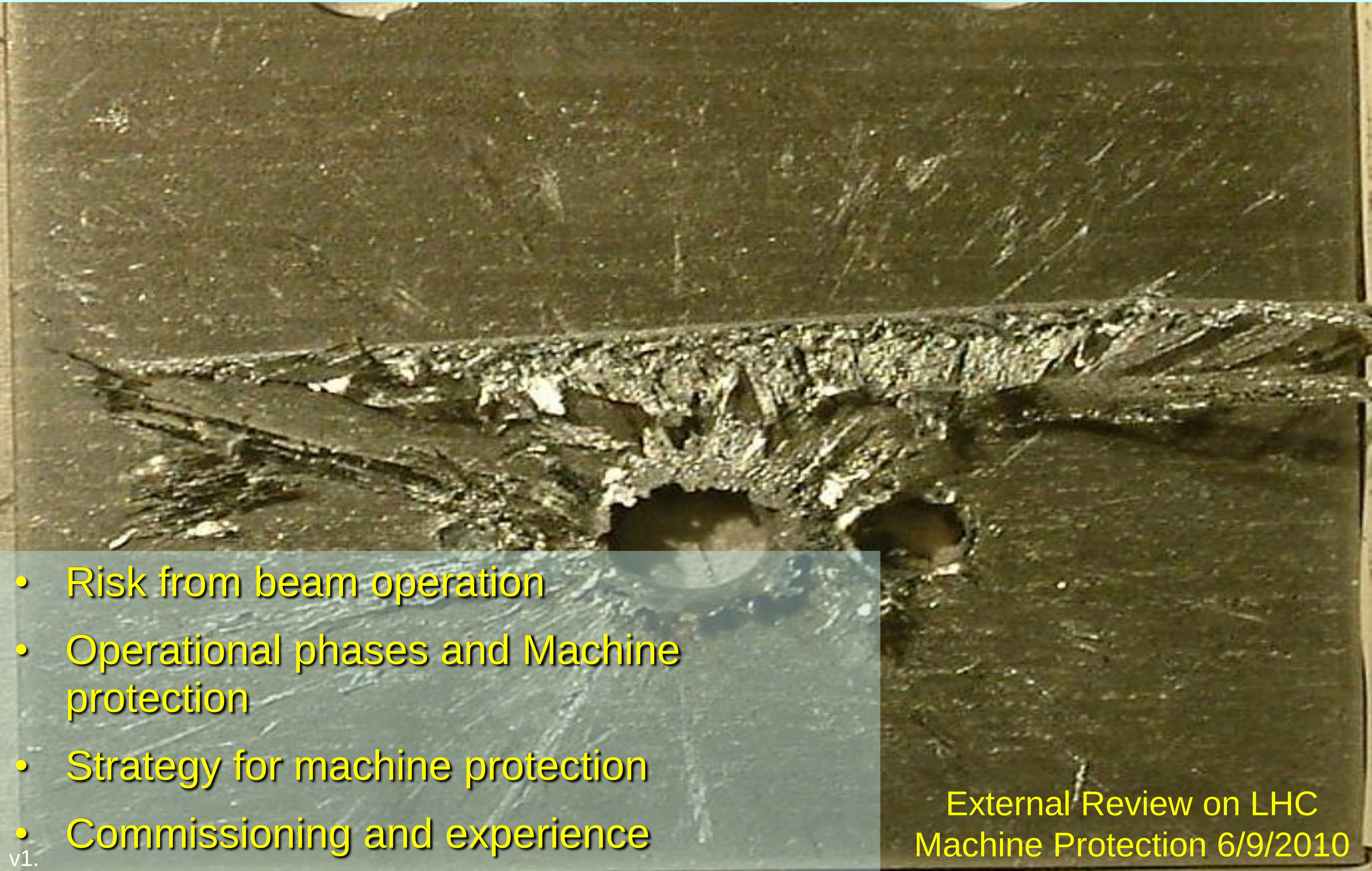

- Risk from beam operation
- Operational phases and Machine protection
- Strategy for machine protection
- Commissioning and experience

External Review on LHC Machine Protection 6/9/2010

v1.

Beam damage test in SPS

Accidental release of 600 MJoule stored in the LHC dipole magnets (one out of eight sectors, interconnect)

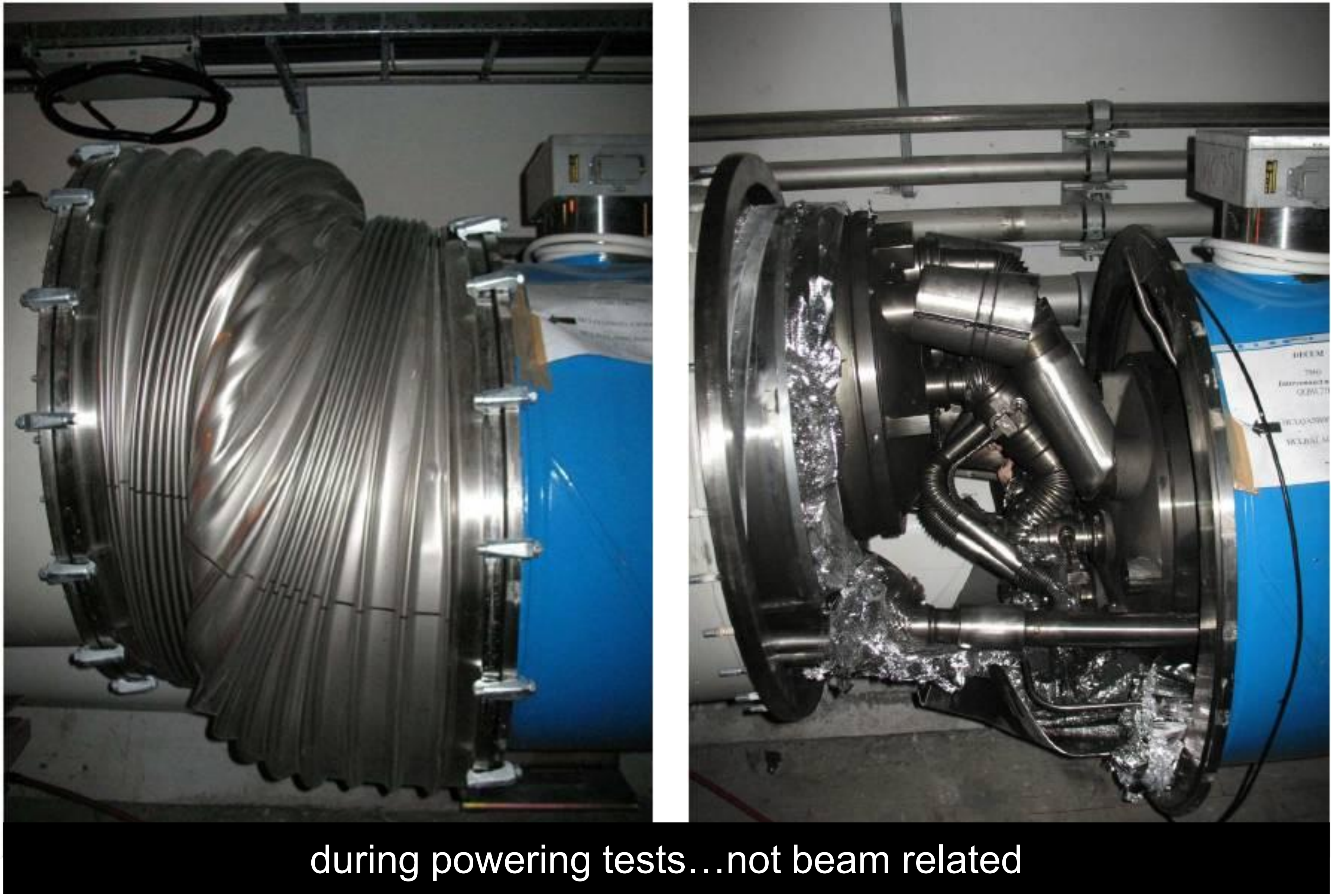

during powering tests…not beam related

Energy stored in one LHC beam and risks

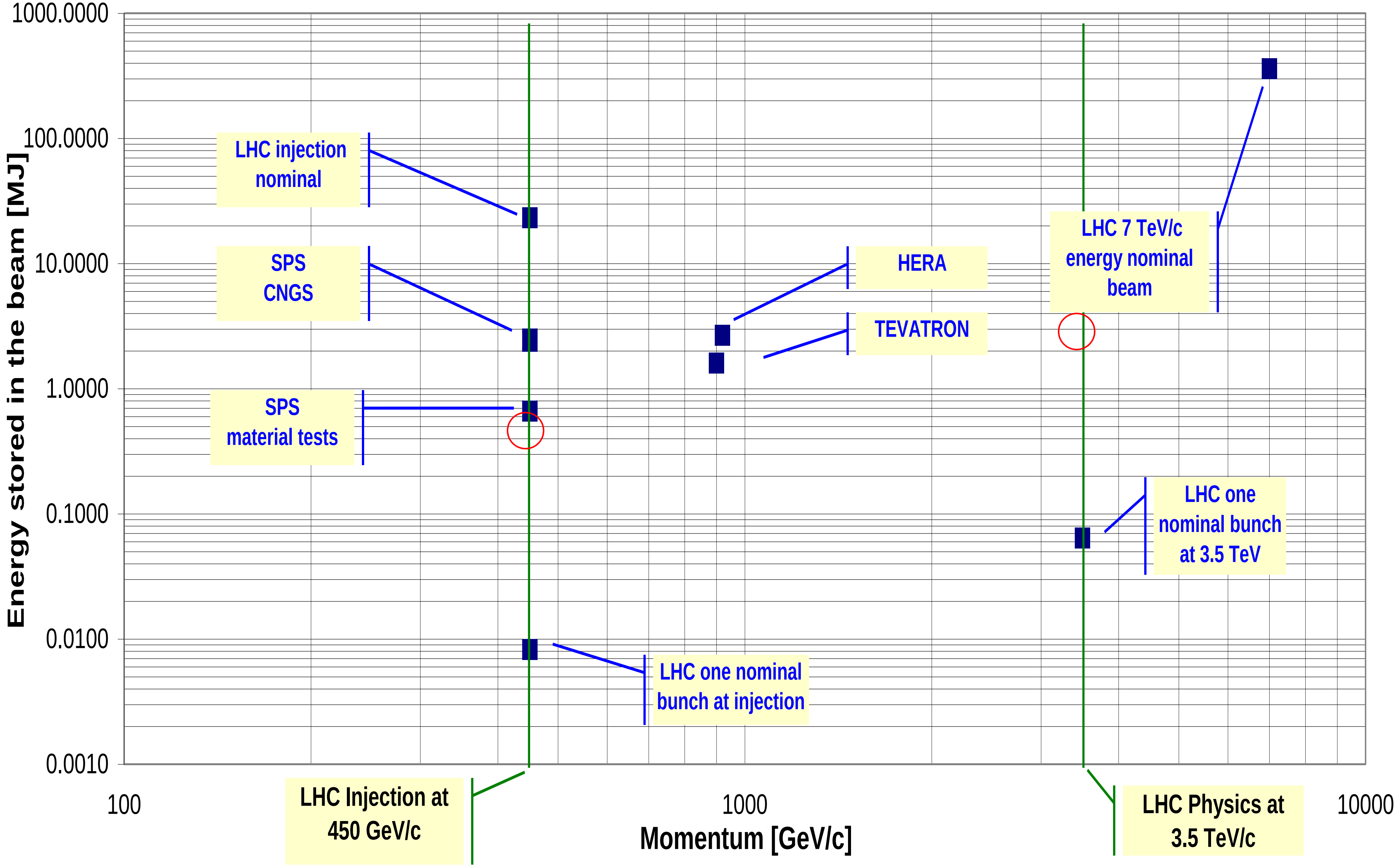

History and organisation

- System for protection were already planned from the start of the LHC project
  - Beam Dumping System, Beam Loss Monitors and Collimation System
- ~2000, the integration of the systems into one Machine Protection System was suggested: start of the Machine Protection WG
  - with the participation of experts from the main protection systems, plus operation, plus representatives from many other groups
- It became clear that an interlocks system is required, to link several different systems
  - architecture of Beam Interlocks and Powering Interlocks was defined
- MPP (Machine Protection Panel) discusses all aspects of machine protection between different teams
- MPPr (MPP restricted), with experts from main protection systems and operation propose commissioning strategy and report to LMC (LHC Machine Committee)

Safety and protection for accelerators

Accelerators, as all other technical systems, must respect some general principles with respect to safety

- Protect the people (e.g. follows legal requirements)
- Protect the environment (e.g. follows legal requirements)
- Protect the equipment

Machine Protection in this review: protect equipment (including the LHC experiments) from damage, activation, downtime caused by the beam – by accidental beam losses

Machine Protection independent of beam (superconducting magnets, normal conducting magnets, power cables, other high power equipment, RF, etc.)

Principles for machine protection

- Protect the machine
  - highest priority is to avoid equipment damage
  - second priority is to avoid quenching of magnets: with superconducting magnets it requires few mJoule to quench, beam losses in the cold part must be minimised
- Protect the beam: trade-off between protection and operation
  - complex protection systems reduces the availability of the machine
  - minimise number of “false” triggers due to a failure in the protection systems (e.g. false beam dumps)
- Provide the evidence
  - if the protection systems stops operation (e.g. beam dumps or inhibits injection), provide clear diagnostics
  - if something goes wrong (near miss or even damage), it should be possible to understand the reason why
  - demonstrate that the Machine Protection Systems work correctly

Accidental beam losses: Risks and protection

- Protection is required since there is some risk
- Risk = probability of an accident (in number of accidents per year)
  • consequences (in Euro, downtime, radiation dose to people)
- Probability of accidental beam loss
  - What are the failure modes leading to beam loss into equipment?
    …there is an practical infinite number of mechanisms to lose beam
  - What is the probability for the most likely failures?
- Consequences of accidental beam loss
  - Damage to equipment
  - Downtime of the accelerator for repair (spare parts available?)
  - Quench of magnets
  - Activation of material, might lead to downtime since access to equipment is delayed
- The higher the risk, the more protection becomes important

Consequences of accidental beam loss

- Accident as in sector 34 in 2008: downtime of one year
- Damage to an LHC experiment: downtime of many months
- Replacement of one superconducting magnet: downtime of about 2 months (warming up, cooling down)
- Replacement of a collimator: downtime of a few days to maximum 2 weeks (including bake out if needed)
- Replacement of another element in th warm part of LHC: downtime of a few days to maximum 2 weeks (including bake out if needed)
- Quench of a magnet (or a few magnets): downtime of a few hours

- Beam accidents could lead to damage of superconducting magnets, and to a release of the energy stored in the magnets (coupled systems)

Beam losses and consequences

- Particle losses lead to particle cascades in materials
- The energy deposition leads to a temperature increase
- Material can vaporise, melt, deform or change its mechanical properties
- Risk to damage sensitive equipment for beam with an energy of some 10 kJ, beam with an energy of some MJoule damages any structure (depends on beam size)
- Superconducting magnets could quench (beam loss into magnet with an energy of ~mJ to J)
- Energy deposition and temperature increase: programs such as FLUKA, MARS or GEANT are being used for the calculation of energy deposition and damage

Damage of a pencil 7 TeV proton beam

copper

Maximum energy deposition in the proton cascade (one proton): $E_{max\_Cu} := 1.5 \cdot 10^{-5} \frac{J}{kg}$

Specific heat of copper is $c_{Cu\_spec} = 384.5600 \frac{1}{kg} \frac{J}{K}$

To heat 1 kg copper by, say, by $\Delta T := 500K$, one needs: $c_{Cu\_spec} \cdot \Delta T \cdot 1kg = 1.92 \times 10^{5} J$

Number of protons to deposit this energy is: $\frac{c_{Cu\_spec} \cdot \Delta T}{E_{max\_Cu}} = \boxed{1.28 \times 10^{10}}$

copper, 12kJ

graphite

Maximum energy deposition in the proton cascade (one proton) : $E_{max\_C} := 2.0 \cdot 10^{-6} \frac{J}{kg}$

Specific heat of graphite is $c_{C\_spec} = 710.6000 \frac{1}{kg} \frac{J}{K}$

To heat 1 kg graphite by, say, by $\Delta T := 1500K$, one needs: $c_{C\_spec} \cdot \Delta T \cdot 1kg = 1.07 \times 10^{6} J$

Number of protons to deposit this energy is: $\frac{c_{C\_spec} \cdot \Delta T}{E_{max\_C}} = \boxed{5.33 \times 10^{11}}$

graphite, 600kJ

SPS experiment: Beam damage with 450 GeV proton beam

Controlled SPS experiment

- $8\cdot10^{12}$ protons clear damage
- beam size $\sigma_{x/y}$ = 1.1mm/0.6mm

above damage limit for copper

stainless steel no damage

- $2\cdot10^{12}$ protons

below damage limit for copper

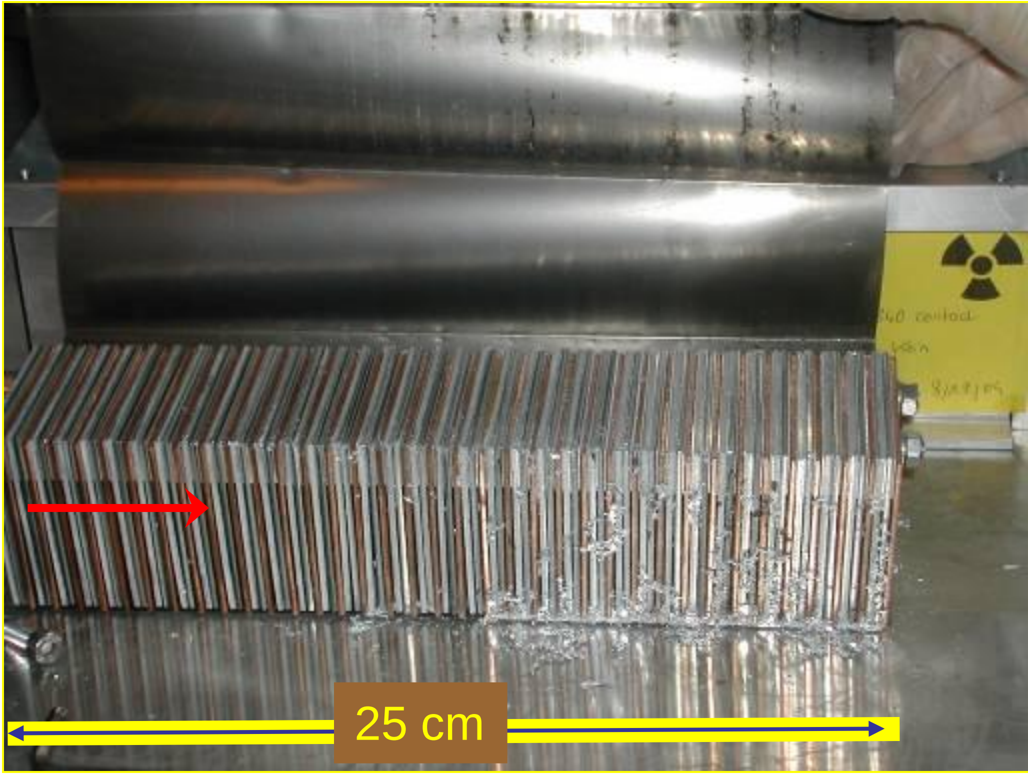

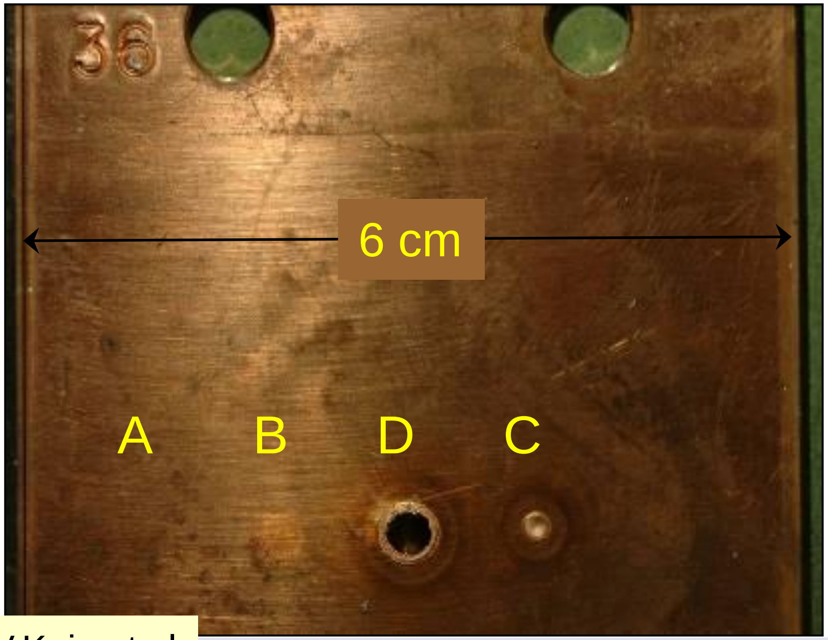

- 0.1 % of the full LHC 7 TeV beams
- Three times below the energy stored in a nominal bunch train (288 bunches) injected into LHC
- 48 bunches from SPS to LHC in 2010/2011

V.Kain et al

LHC: set-up and probe beam flags

From the SPS damage tests and operational experience

- At injection energy of 450 GeV: a loss of 10^{12} protons will not cause (major) damage, such as damaging the vacuum pipe
- The limit decreases with energy, proportional to $(E[GeV]/450)^{1.7}$, at 3.5 TeV the limit is about $3\cdot10^{10}$ protons

- Injection into an EMPTY machine with beam of much less intensity of $1.2\cdot10^{10}$ (PROBE_BEAM_FLAG, max. possible value $1.0\cdot10^{11}$)
- IF no beam in LHC AND PROBE_BEAM_FLAG = FALSE: no injection

- If beam intensity is below 10^{12} protons (injection): SETUP_BEAM_FLAG is TRUE – done in hardware
- For commissioning, some of the interlocks can be masked if SETUP_BEAM_FLAG = TRUE

Probe and Setup Beam Flags at injection

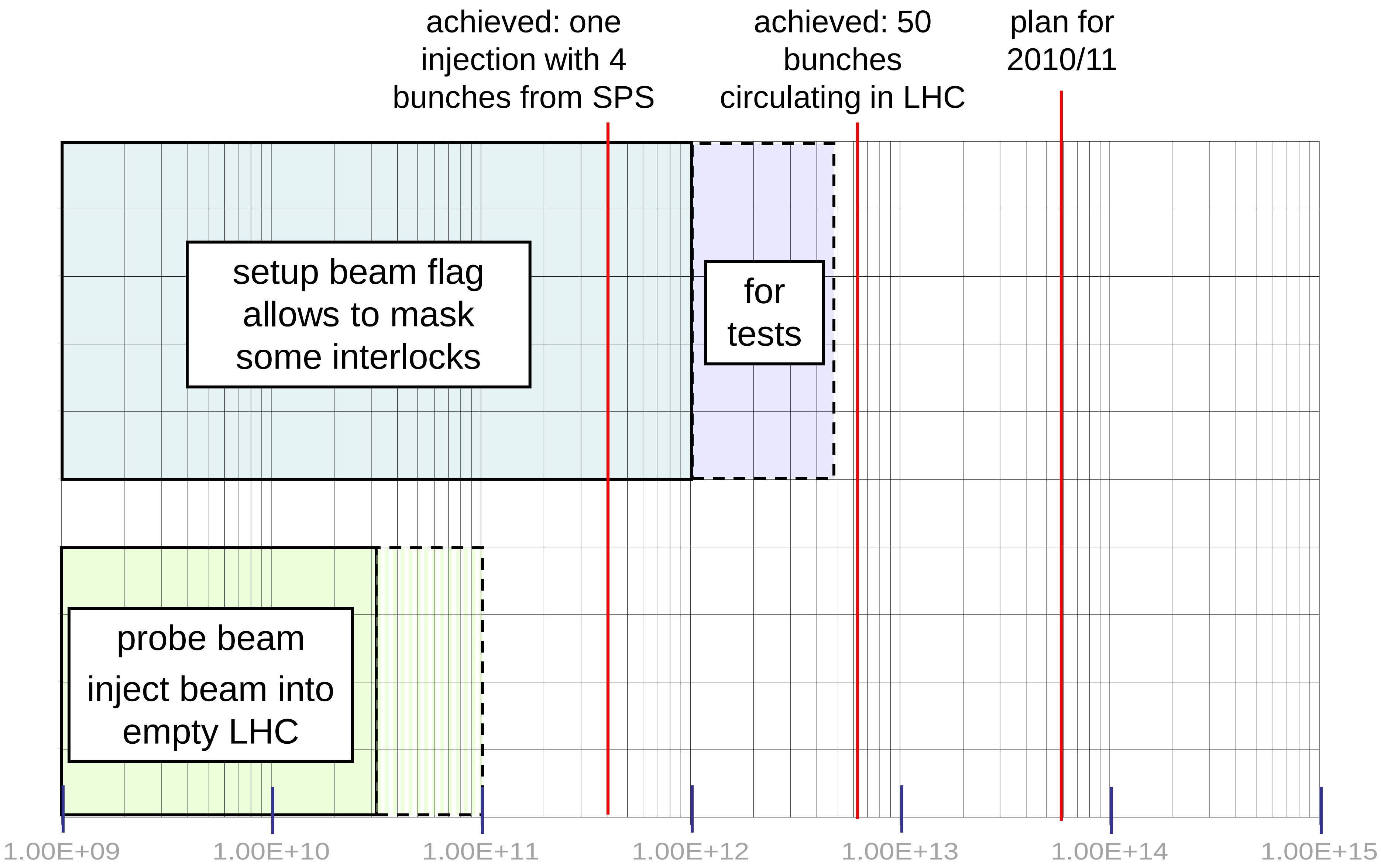

achieved: one injection with 4 bunches from SPS

achieved: 50 bunches circulating in LHC

plan for 2010/11

setup beam flag allows to mask some interlocks

for tests

probe beam

inject beam into empty LHC

What can go wrong?

Classification of failures

When can it go wrong?

Operational phases

Classification of failures

- Type of the failure
  - hardware failure (power converter trip, magnet quench, AC distribution failure such as thunderstorm, valve or beam monitor in vacuum chamber, vacuum leak, RF trip, kicker magnet misfires, ….)
  - controls failure (wrong data, wrong magnet current function, trigger problem, timing system, feedback failure, ..)
  - operational failure (chromaticity / tune / orbit wrong values, …)
  - beam instability (due to too high beam / bunch current)
  - material in the beam pipe (UFO, …)
- Parameters for the failure
  - damage potential
  - probability for the failure
  - time constant for beam loss

  } risk can be derived
- Be aware of combined failures

Time constant for beam losses

Single turn (single-passage) beam loss (ns - μs)

- failures of kicker magnets (injection, extraction, special kicker magnets, for example for diagnostics)
- transfer lines between SPS and LHC
- transfer lines from LHC to beam dumping block

Passive protection: relies on beam absorbers

Very fast beam loss (ms)

- multi turn beam losses
- due to a large number of possible failures, mostly in the magnet powering system, with a typical time constant of some 10 turns to many seconds

Fast beam loss (some 10 ms to seconds)

Slow beam loss (many seconds)

Active protection: detect and dump

LHC operational cycle and machine protection

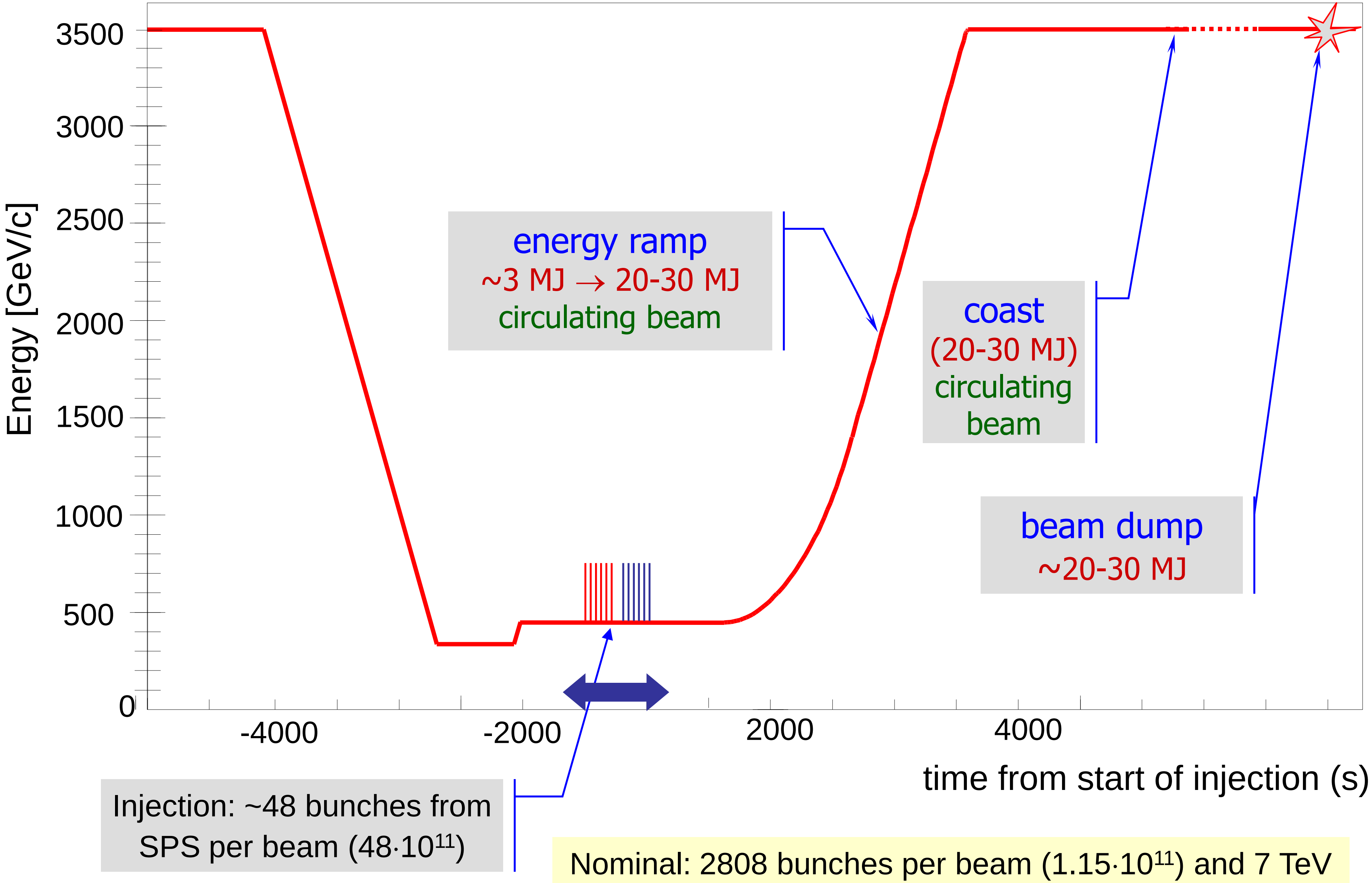

energy ramp
~3 MJ → 20-30 MJ
circulating beam

coast
(20-30 MJ)
circulating
beam

beam dump
~20-30 MJ

Injection: ~48 bunches from
SPS per beam ($48 \cdot 10^{11}$)

Nominal: 2808 bunches per beam ($1.15 \cdot 10^{11}$) and 7 TeV

Injection: Without quenching magnets or causing damage
No kick by injection kicker of circulating beam (correct synchronisation)
Injection protection absorber in place in case of kicker failure

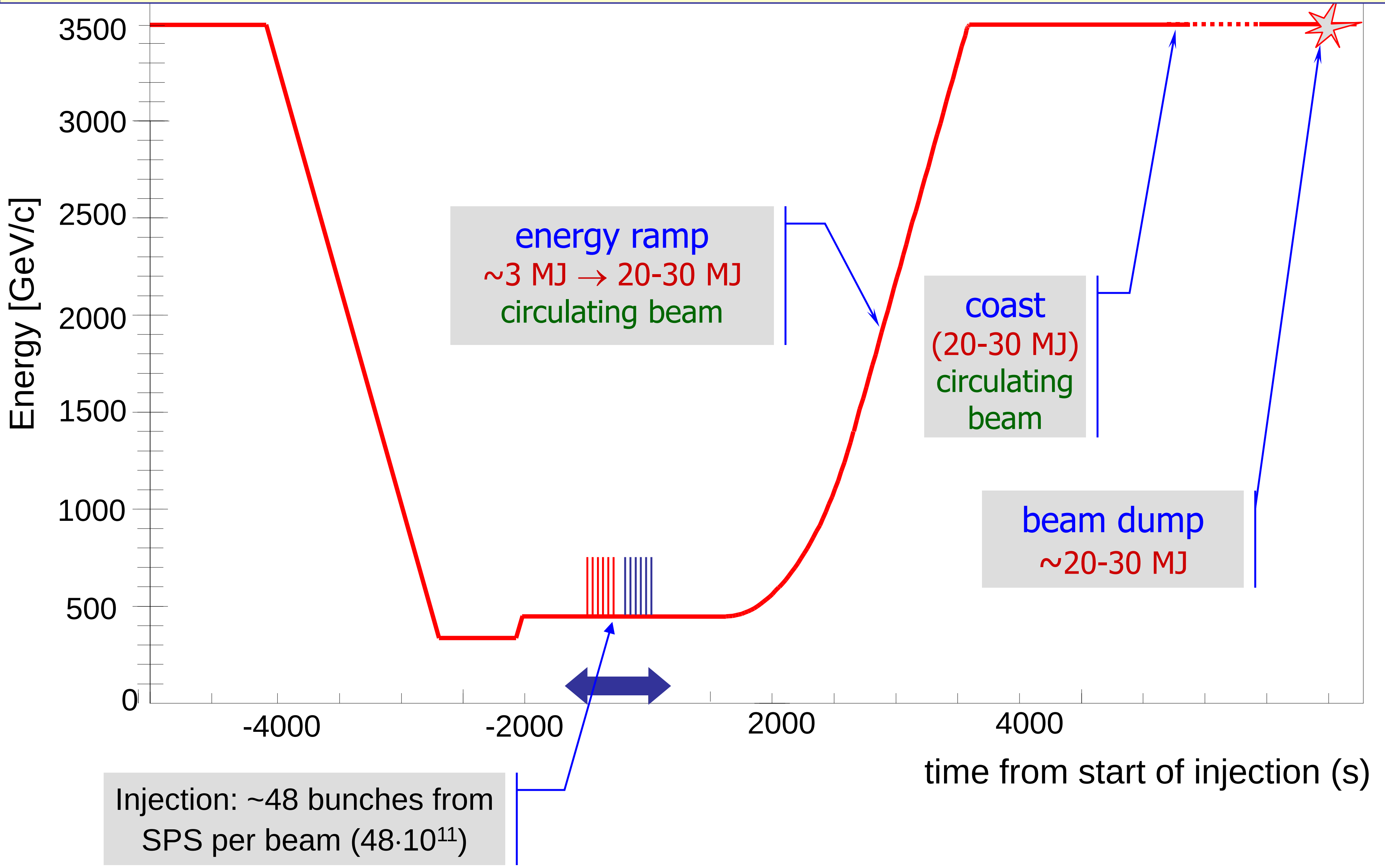

energy ramp
~3 MJ → 20-30 MJ
circulating beam

coast
(20-30 MJ)
circulating
beam

beam dump
~20-30 MJ

Injection: ~48 bunches from SPS per beam ($48\cdot10^{11}$)

Circulating beam: In case of failure, detect failure and extract beam into dump block for some failures within a few turns

No accidental firing of a kicker magnet

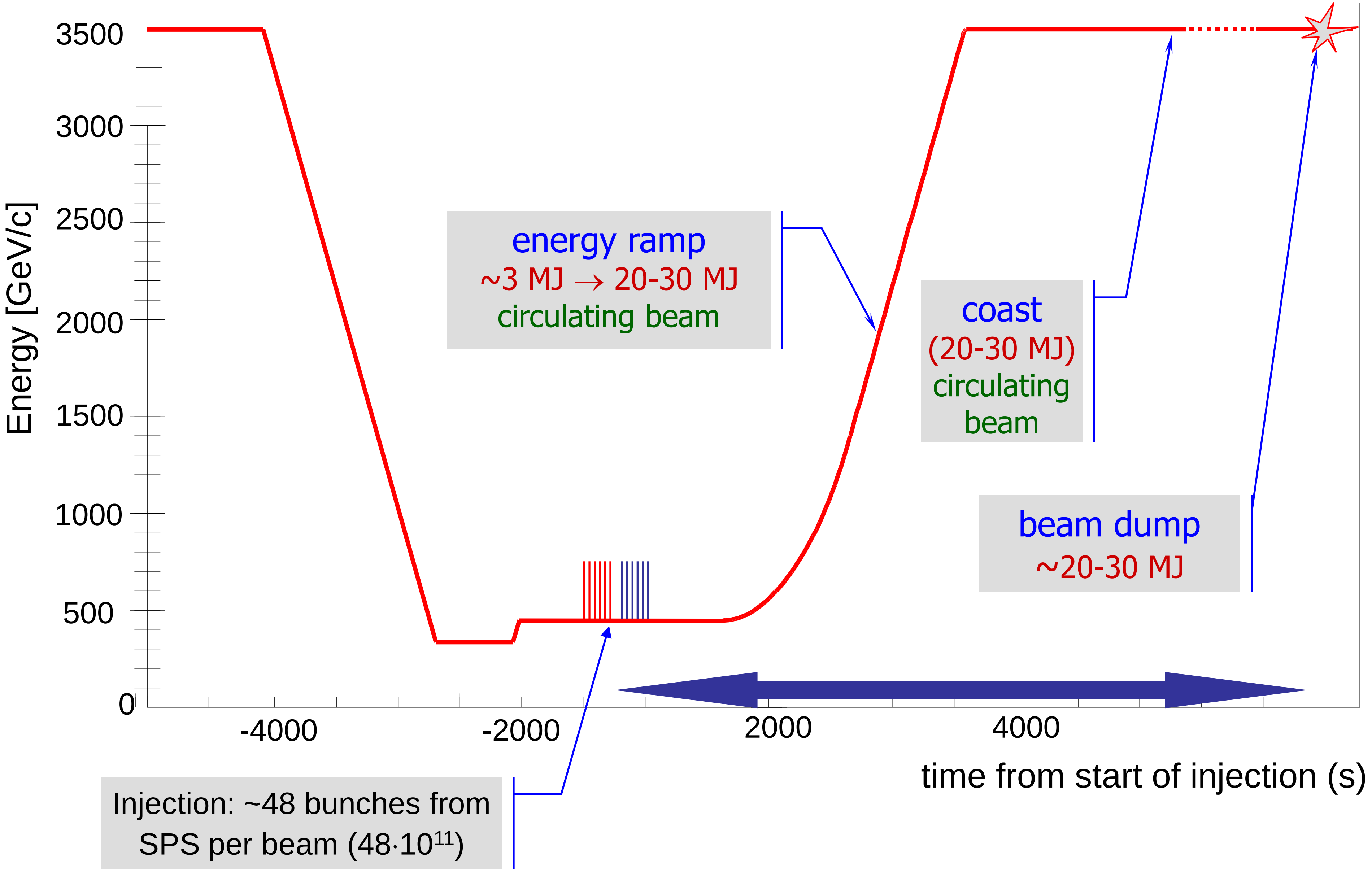

energy ramp
~3 MJ → 20-30 MJ
circulating beam

coast
(20-30 MJ)
circulating beam

beam dump
~20-30 MJ

Injection: ~48 bunches from SPS per beam ($48 \cdot 10^{11}$)

Extraction: Beams must ALWAYS be extracted into beam dump block
Kicker must be synchronised with the 3 μs long beam abort gap
No particles in the abort gap

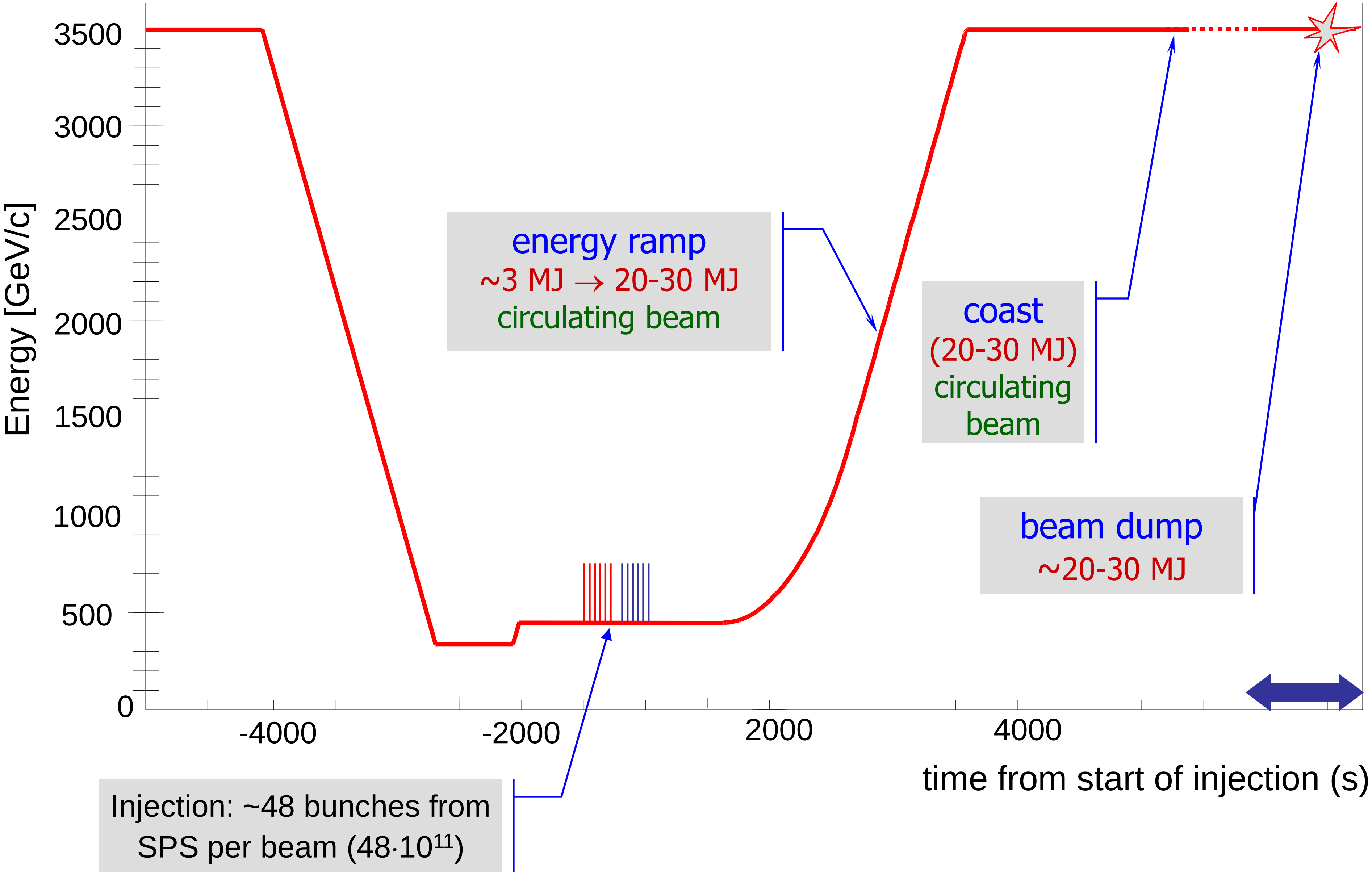

energy ramp
~3 MJ → 20-30 MJ
circulating beam

coast
(20-30 MJ)
circulating
beam

beam dump
~20-30 MJ

Injection: ~48 bunches from SPS per beam ($48 \cdot 10^{11}$)

Machine Protection during all phases of operation

- The LHC is the first accelerator with the intensity of the injected beam already far above threshold for damage, protection during the injection process is mandatory

- At 3.5 TeV, fast beam loss with an intensity of less than one single “nominal bunch” could damage equipment

- The only component that can stand a loss of the full beam is the beam dump block - all other components would be damaged
- The LHC beams must ALWAYS be extracted into the beam dump blocks
  - at the end of a fill
  - in case of failure

LHC: Strategy for machine protection

Definition of aperture by collimators.	**Beam Cleaning System**
Early detection of failures for equipment acting on beams generates dump request, possibly before the beam is affected.	**Powering Interlocks** **Fast Magnet Current change Monitor**
Active monitoring of the beams detects abnormal beam conditions and generates beam dump requests down to a single machine turn.	**Beam Loss Monitors** Other Beam Monitors
Reliable operation of beam dumping system for dump requests or internal faults, safely extract the beams onto the external dump blocks.	**Beam Dumping System**
Reliable transmission of beam dump requests to beam dumping system. Active signal required for operation, absence of signal is considered as beam dump request and injection inhibit.	**Beam Interlock System**
Passive protection by beam absorbers and collimators for specific failure cases.	**Collimator and Beam Absorbers**

Examples

- Transfer and injection
- Failure of normal conducting magnet and fast beam loss
- Beam dump

SPS, transfer line, LHC injection and CNGS

Beam is accelerated in the SPS to 450 GeV

Beam with a stored energy of 0.5 MJ be transferred from SPS to LHC, at about damage limit

For CNGS operation, the intensity is similar to LHC injection

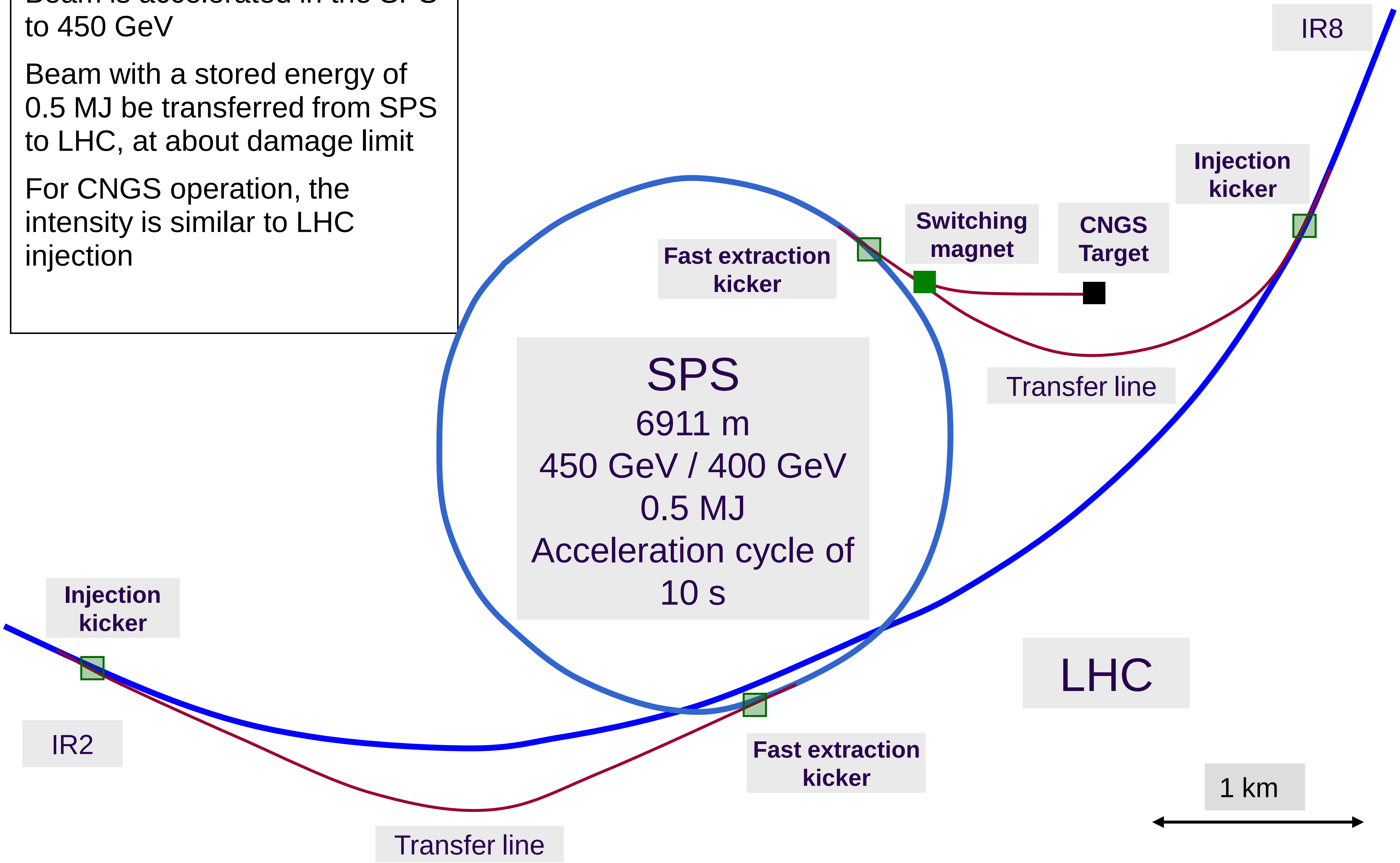

SPS
6911 m
450 GeV / 400 GeV
0.5 MJ
Acceleration cycle of 10 s

Failure of a kicker magnet

Extraction kicker magnet:

- wrong pulse strength
- wrong timing

Injection kicker magnet:

- wrong pulse strength
- wrong timing

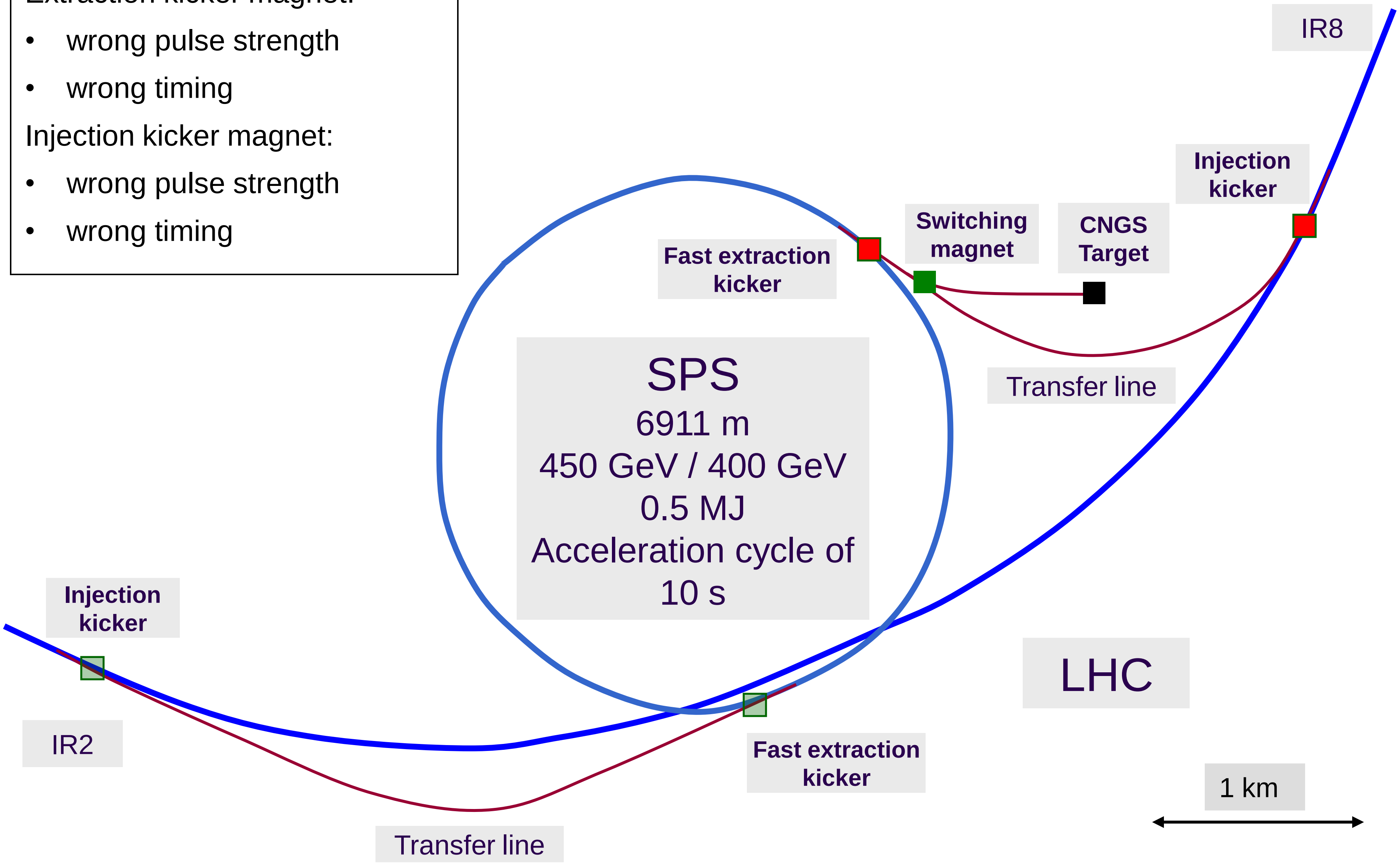

Failure in the transfer line (magnet, other element)

Wrong setting of magnets

Object in the transfer line blocks beam passage

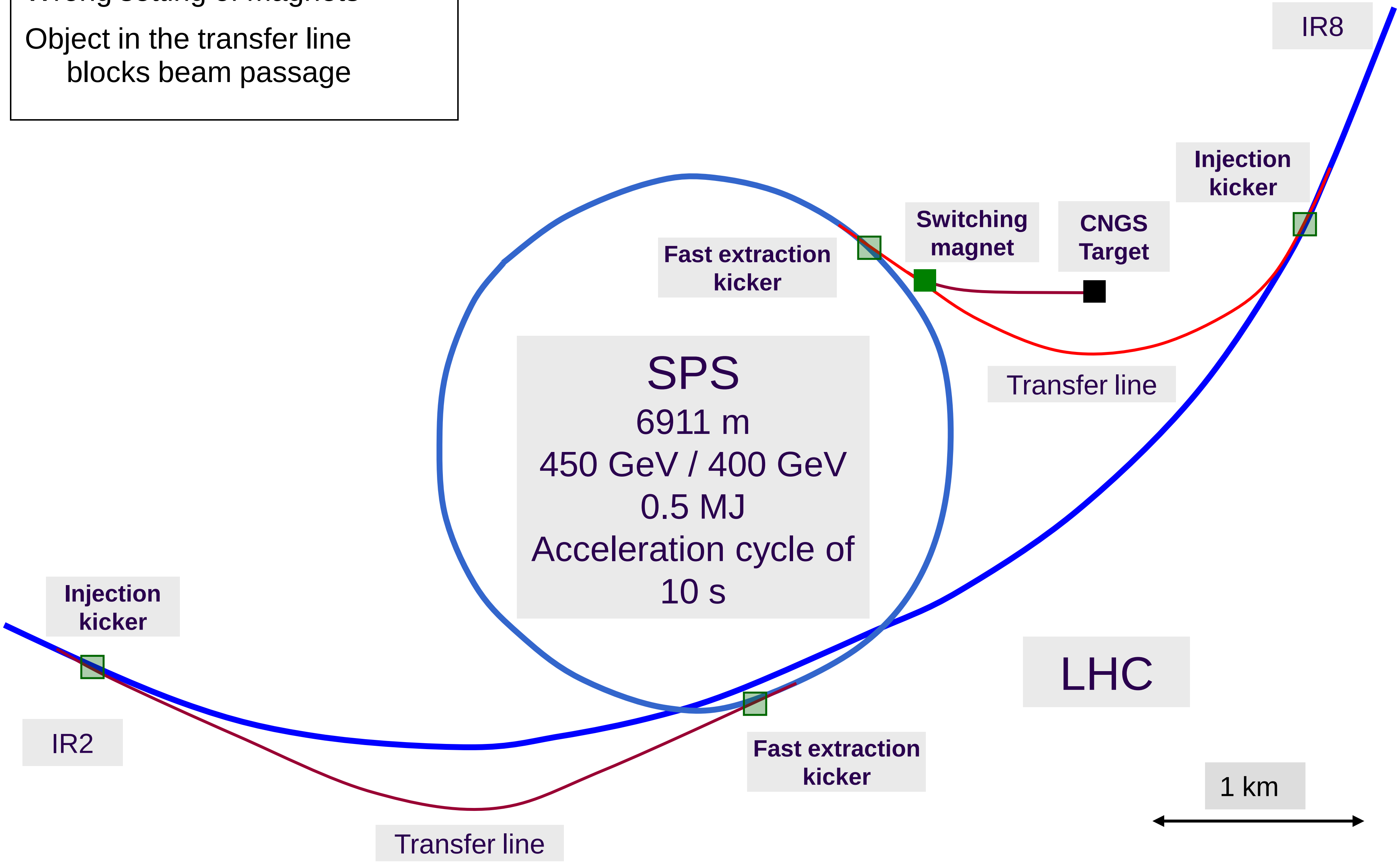

IR8

Injection kicker

Switching magnet

CNGS Target

Fast extraction kicker

SPS

6911 m

450 GeV / 400 GeV

0.5 MJ

Acceleration cycle of 10 s

Transfer line

Injection kicker

IR2

LHC

Fast extraction kicker

1 km

Transfer line

Protection for beam transfer from SPS to LHC

- After extraction the trajectory is determined by the magnet fields: safe beam transfer and injection relies on correct settings
  - orbit in SPS during extraction with tight tolerances verified with BPMs
  - correct magnet currents (slow pulsing magnets, fast pulsing magnets)
  - position of vacuum valves, beam screens,… must all be OUT
  - energy of SPS, transfer line and LHC must match
  - LHC must be ready to accept beam
  - collimators and absorbers must be in the correct position
- Verifying correct settings just before extraction and injection

A signal "**extraction permit**" is **required to extract beam from SPS** and another signal "**injection permit**" to **inject beam into LHC**

- The kicker must fire at the correct time with the correct strength
- Position of collimators and beam absorbers in SPS, transfer line and LHC injection region to protect from misfiring

Example single turn failure: Protection at injection

Detailed presentation
by V.Kain

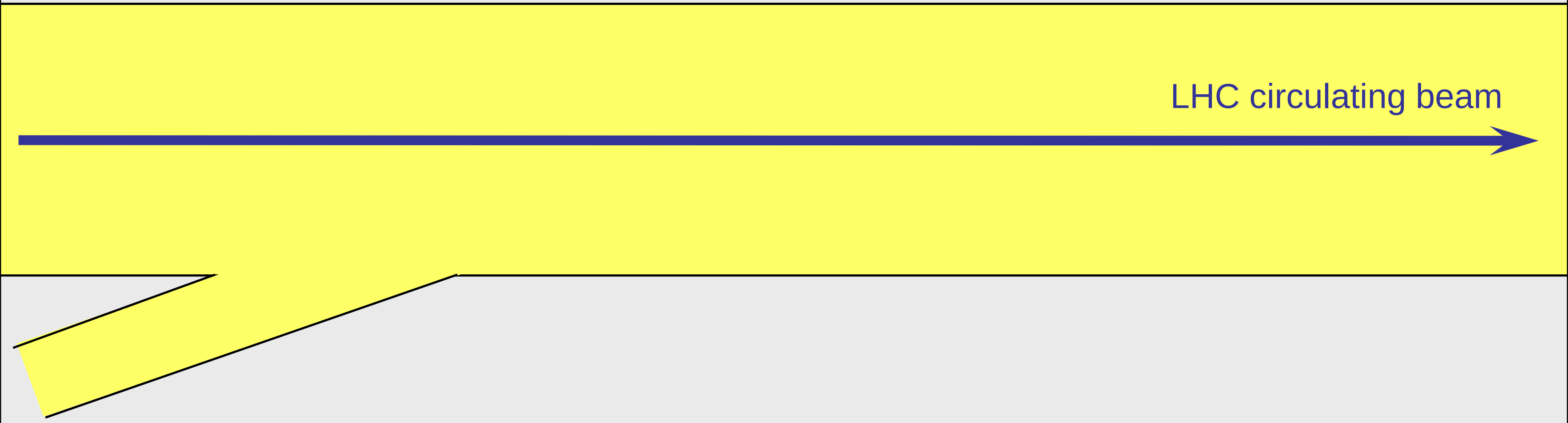

Circulating beam in LHC

Protection at injection

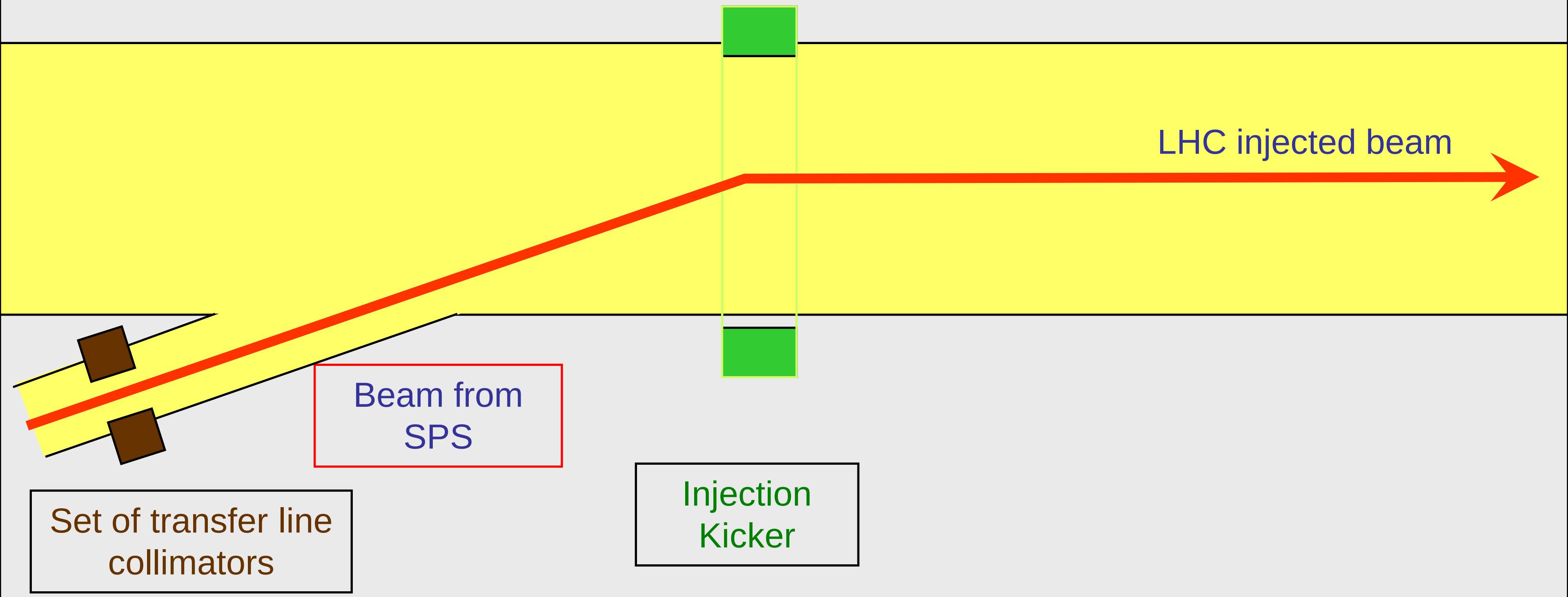

Beam injected from SPS and transfer line

Protection at injection

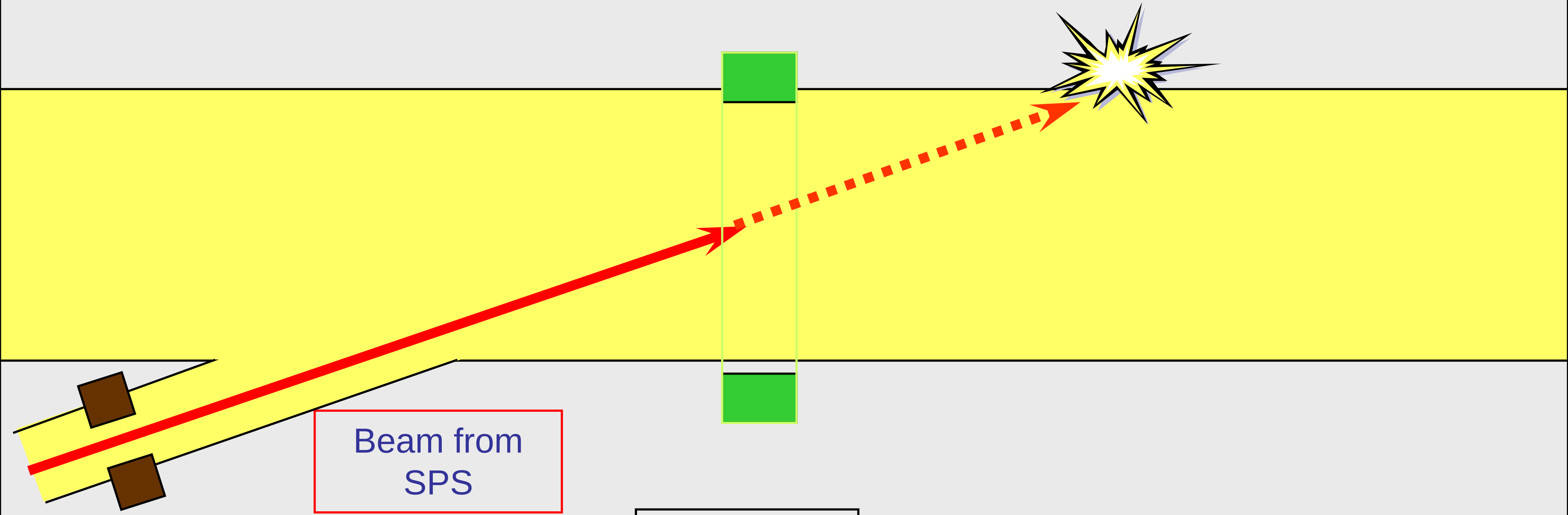

Beam from SPS

Set of transfer line collimators

Injection Kicker

Kicker misfiring (no kick)

Protection at injection

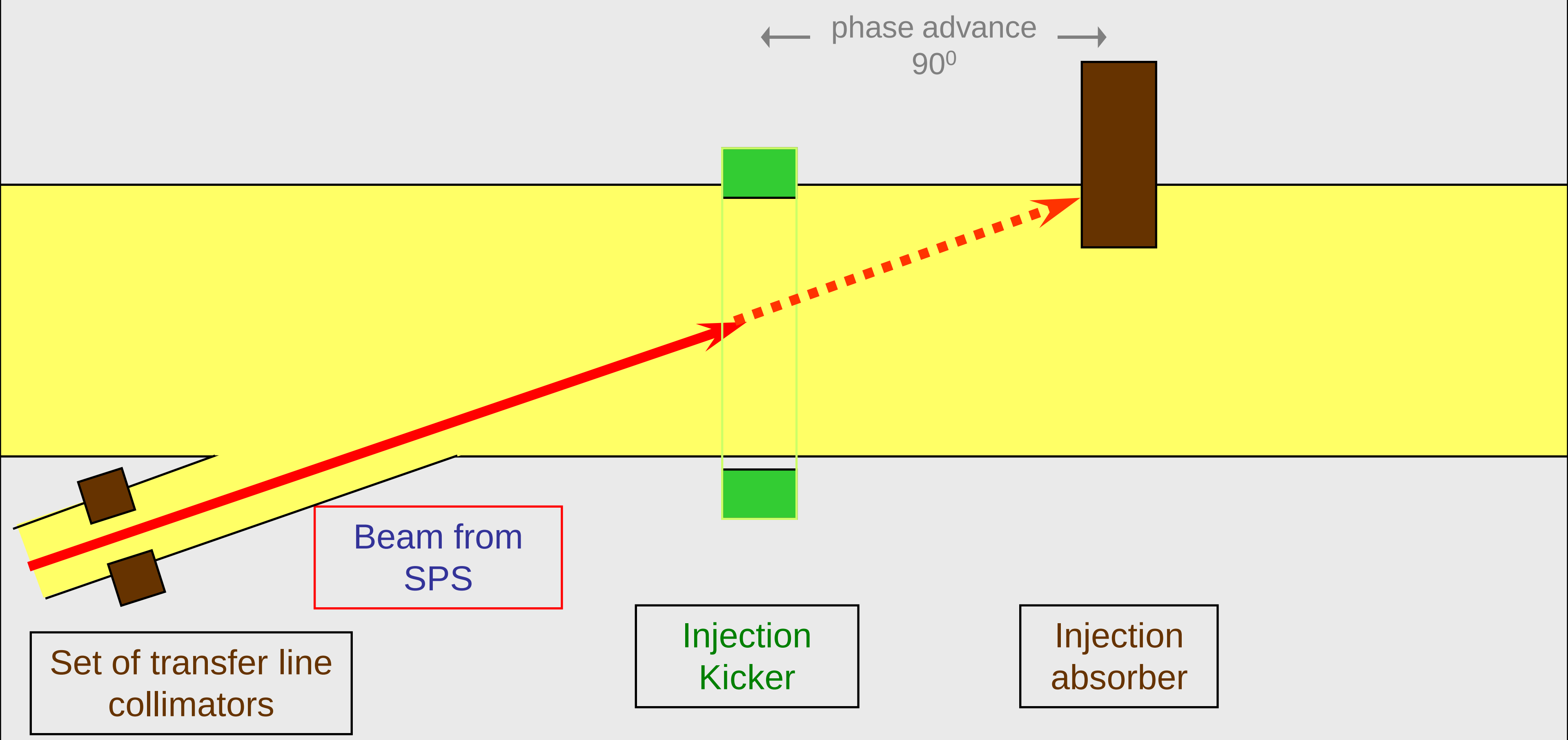

phase advance 90^0

Beam from SPS

Set of transfer line collimators

Injection Kicker

Injection absorber

Beam absorbers take beam in case of kicker misfiring

Transfer line collimators ensure that incoming beam trajectory is ok

Protection at injection

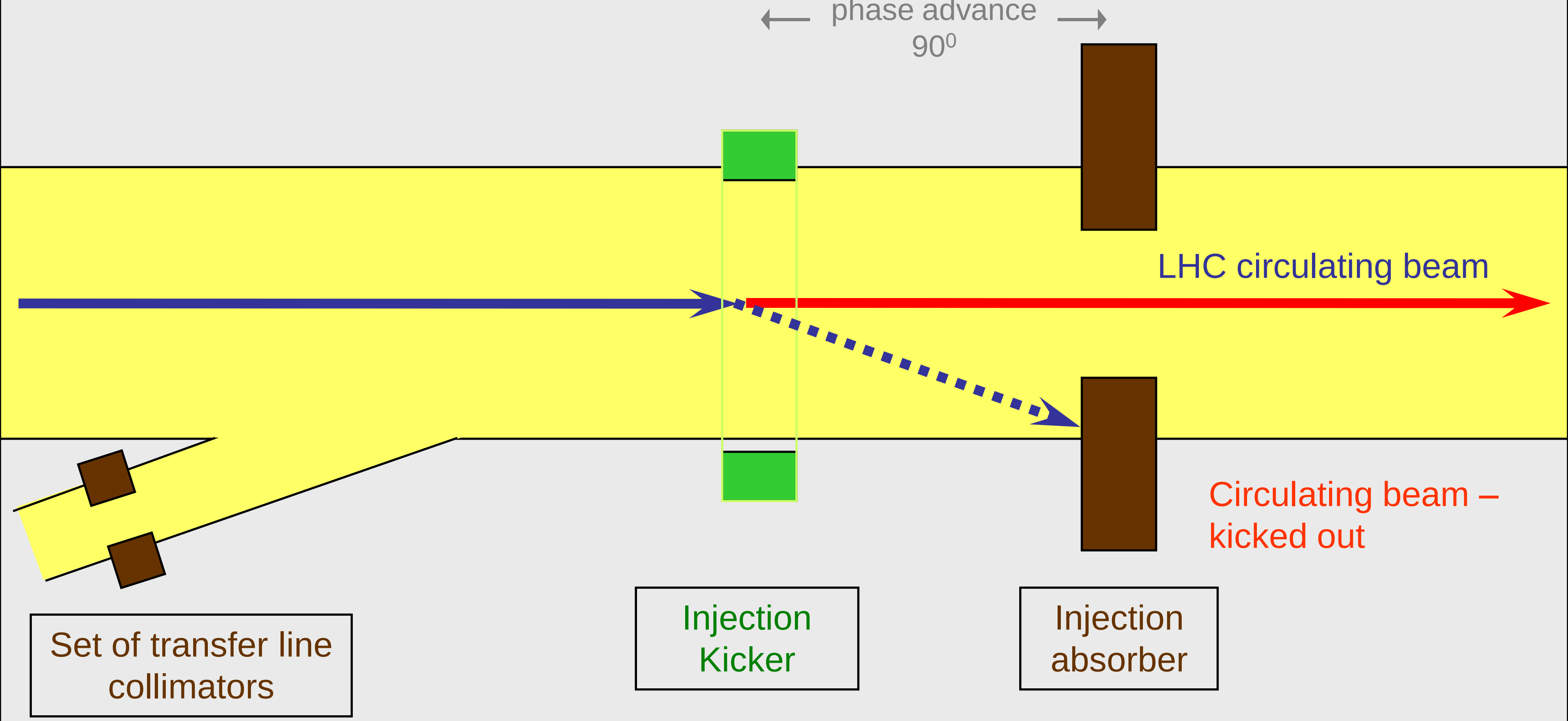

phase advance 90^0

LHC circulating beam

Circulating beam –
kicked out

Set of transfer line
collimators

Injection
Kicker

Injection
absorber

Beam absorbers take beam in case of kicker misfiring on circulating beam

Circulating beam fastest failure: trip of normal conducting magnet

Orbit change: after about 13 turns (1.1 ms) $3 \cdot 10^9$ protons touch collimator, about 6 turns later 10^{11} protons touch collimator

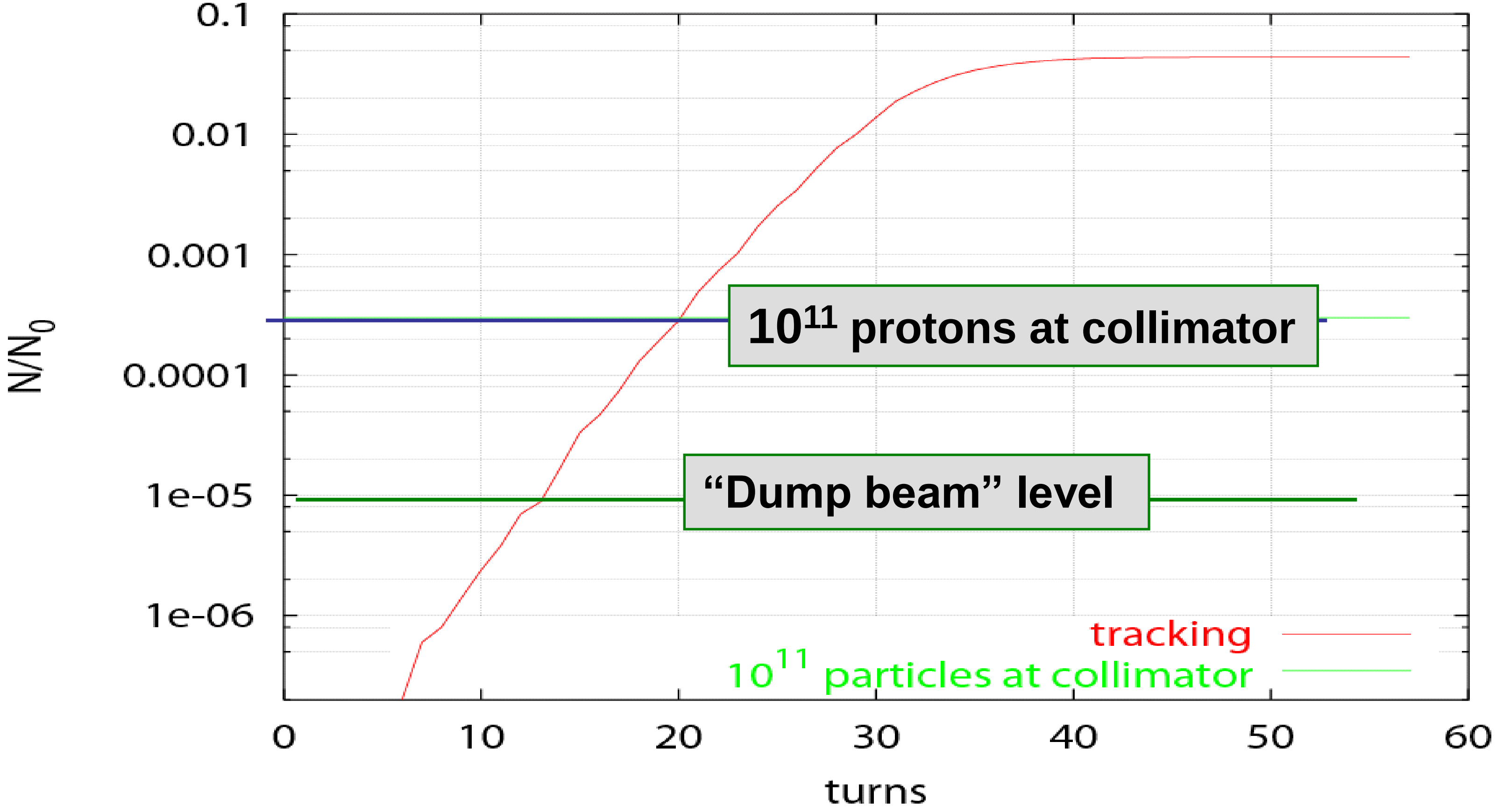

10^{11} protons at collimator

“Dump beam” level

V.Kain / O.Bruning

LHC Layout

eight arcs (sectors)

eight long straight section (about 700 m long)

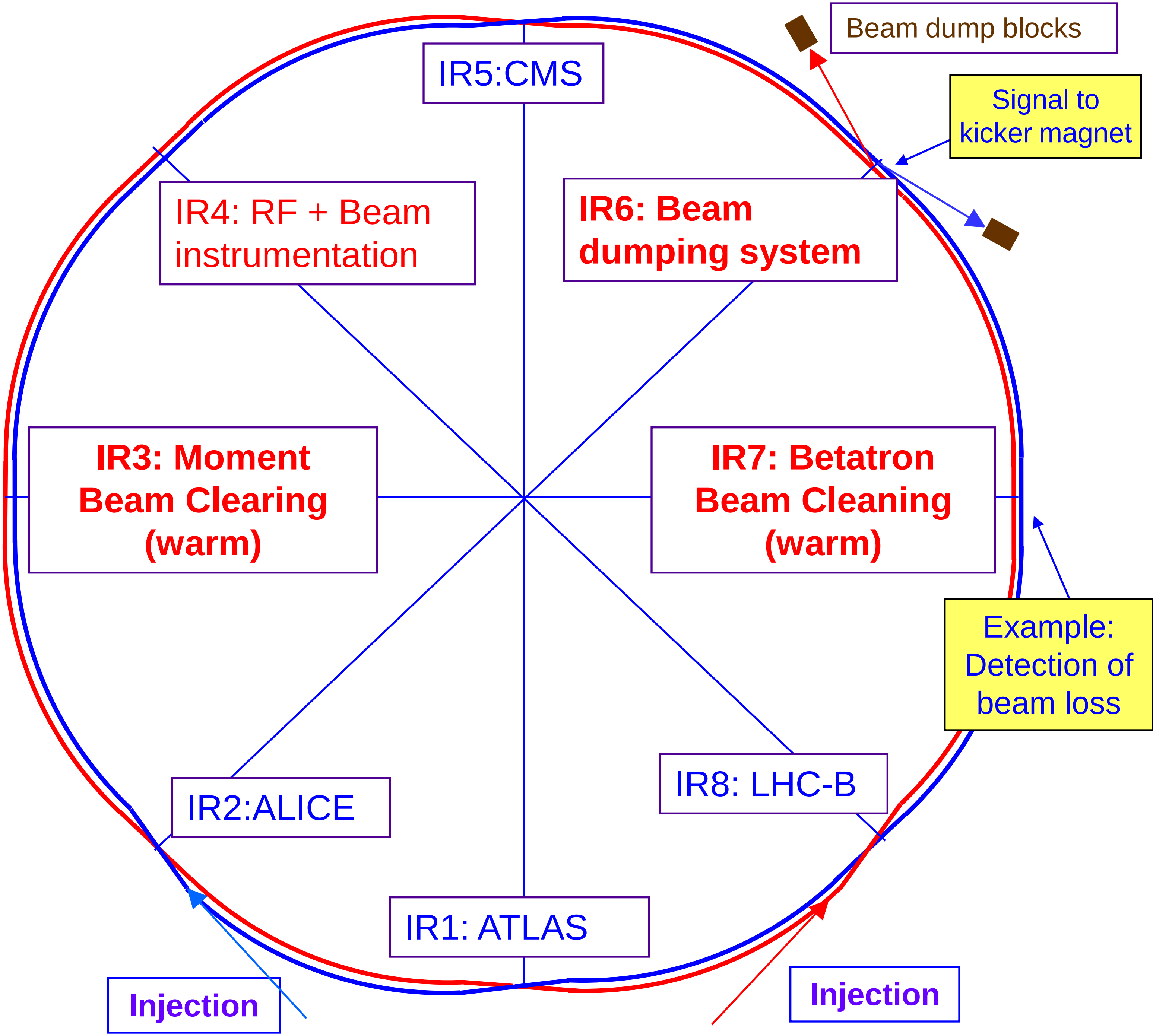

IR5:CMS

Beam dump blocks

Signal to kicker magnet

IR4: RF + Beam instrumentation

IR6: Beam dumping system

IR3: Moment Beam Clearing (warm)

IR7: Betatron Beam Cleaning (warm)

Example: Detection of beam loss

IR8: LHC-B

IR2:ALICE

IR1: ATLAS

Injection

Injection

Schematic layout of LHC beam dumping system

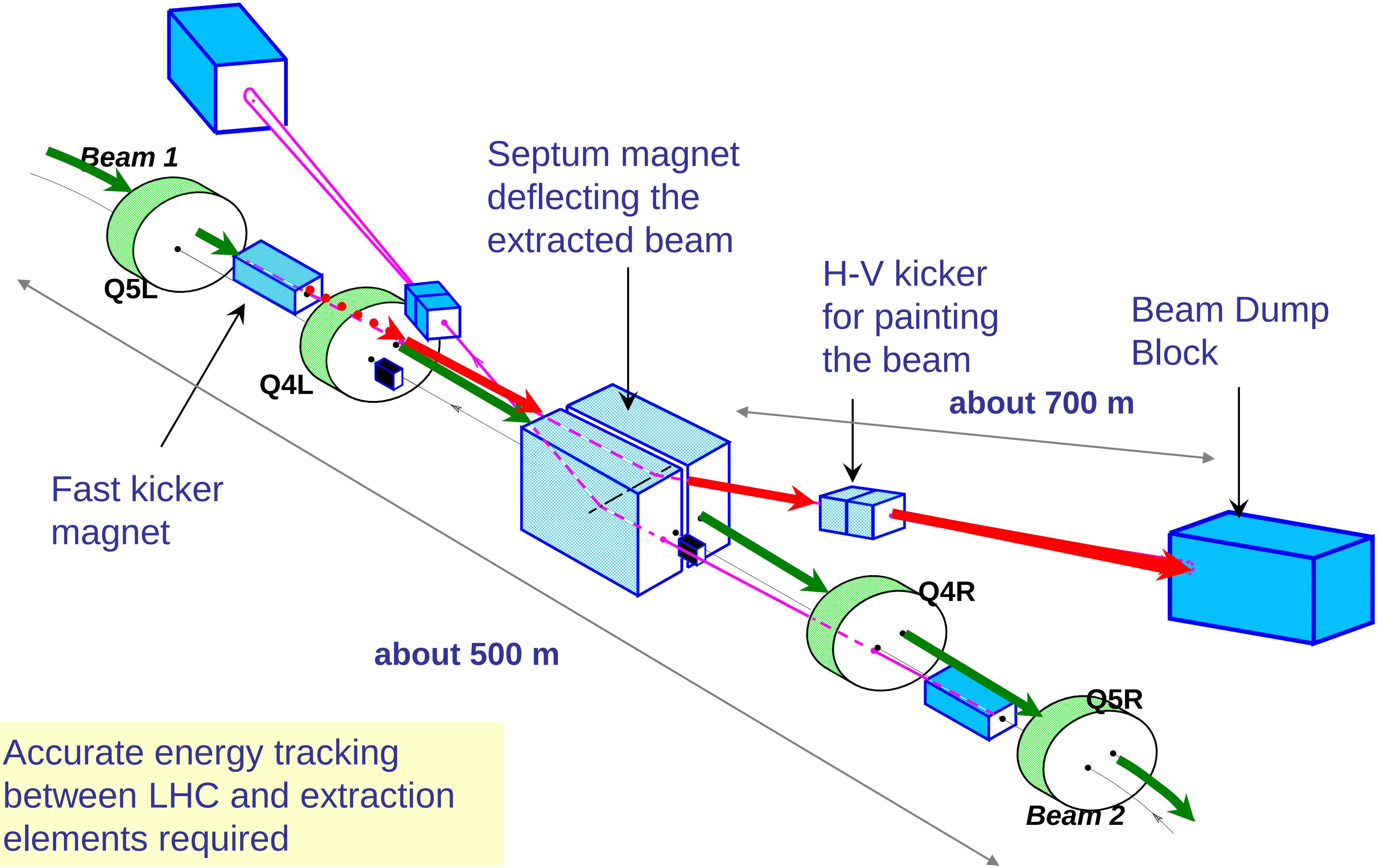

Septum magnet deflecting the extracted beam

H-V kicker for painting the beam

Beam Dump Block

about 700 m

Fast kicker magnet

about 500 m

Accurate energy tracking between LHC and extraction elements required

Protection when dumping the beams

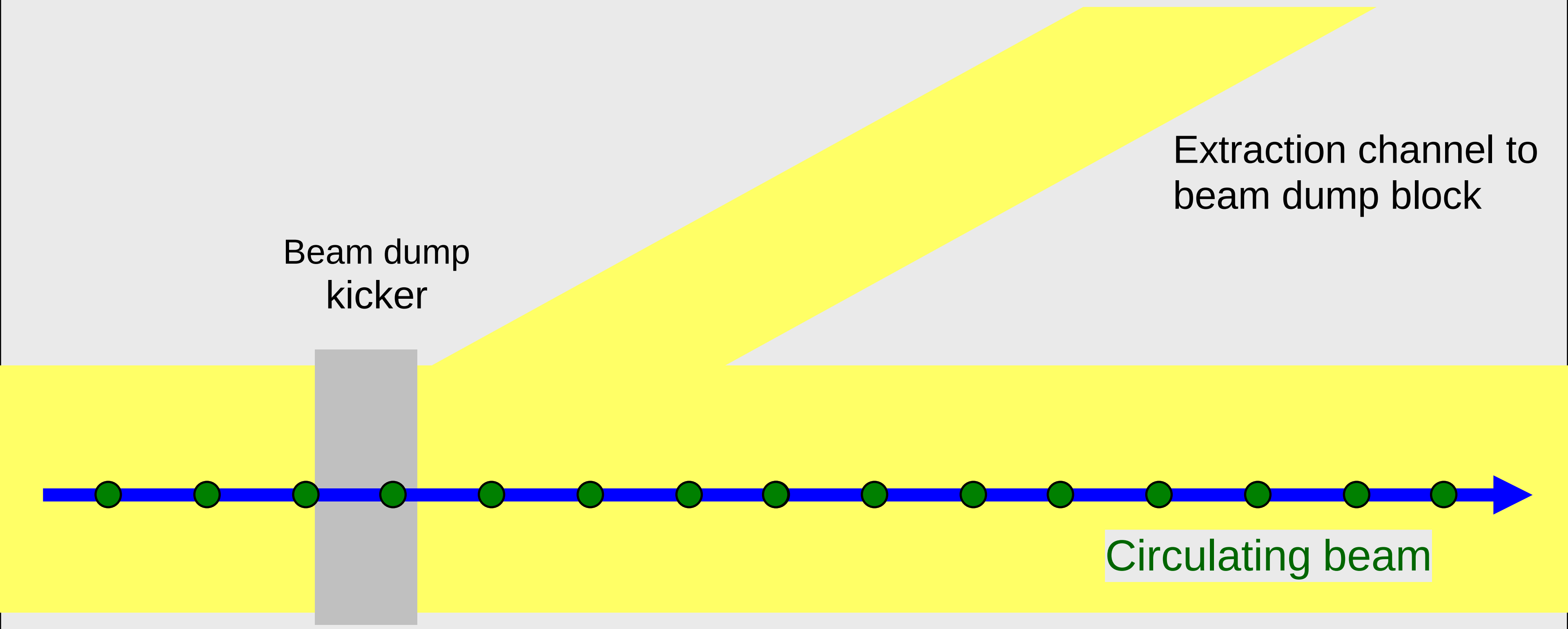

Extraction channel to
beam dump block

Beam dump
kicker

Circulating beam

Before beam dump request….

Protection when dumping the beams

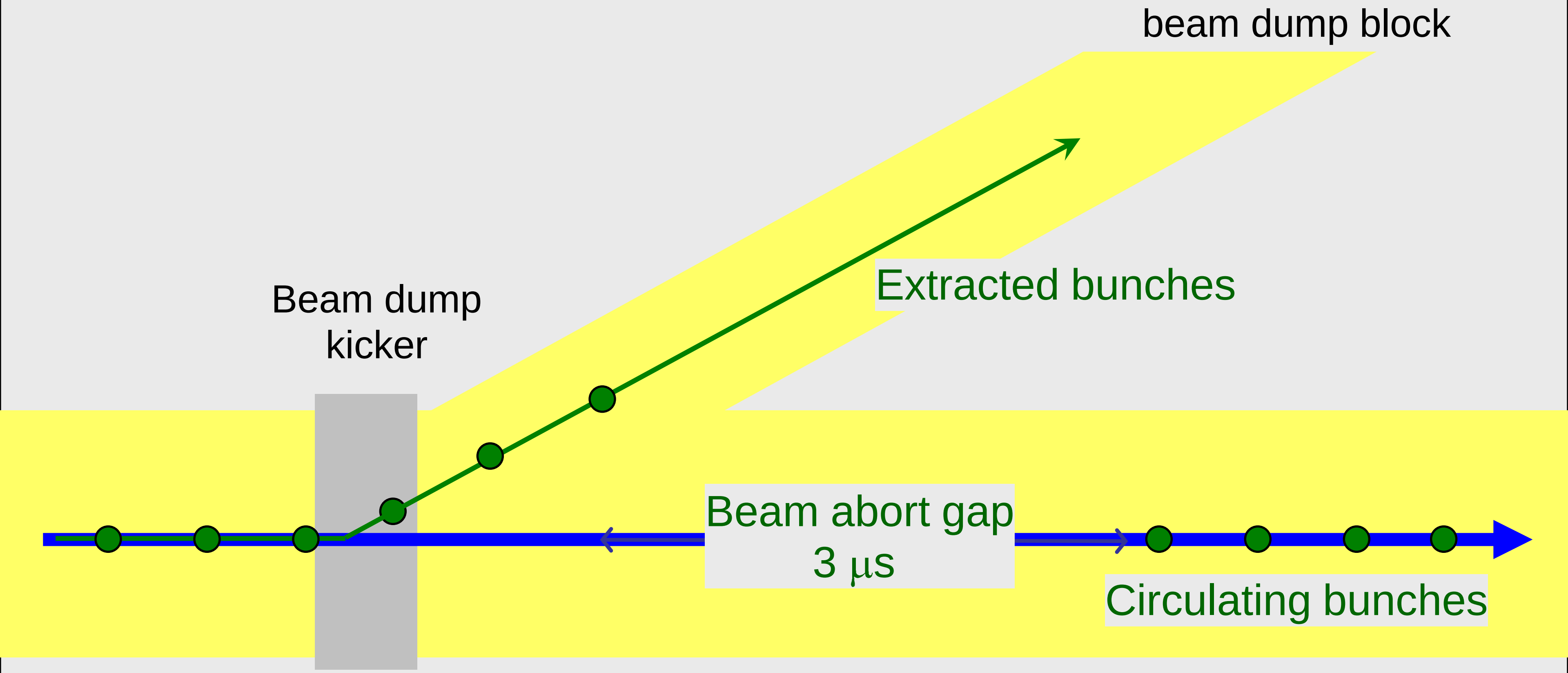

Beam dump must be synchronised with beam abort gap (kicker risetime)

Strength of kicker and septum magnets must match energy of the beam:
Ultrareliable energy tracking

Orbit excursions in IR6 < 2 mm to protect dump channel (interlock)

Protection when dumping the beams

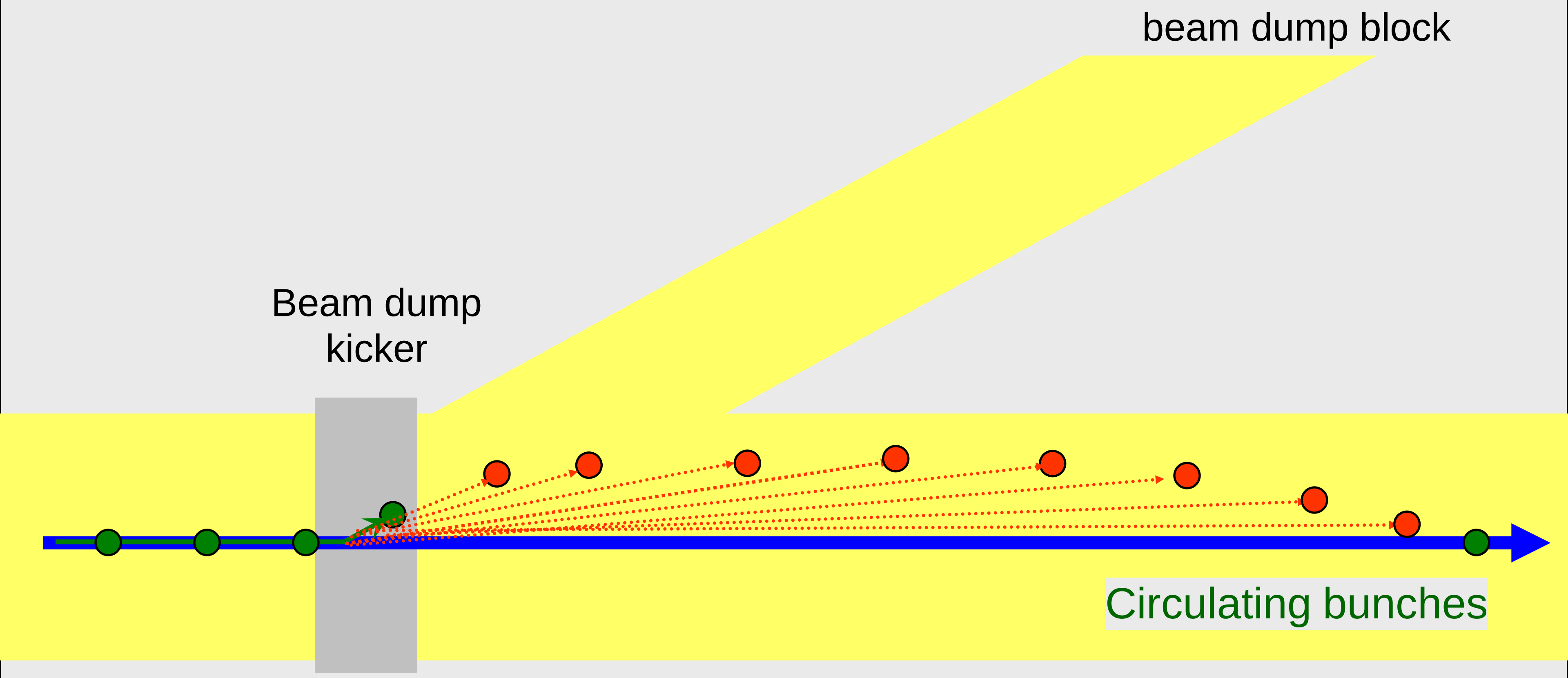

Example for accidental prefiring of kicker:

about 100 bunches (nominal 25 ns bunch distance)

are only partially deflected

Protection when dumping the beams

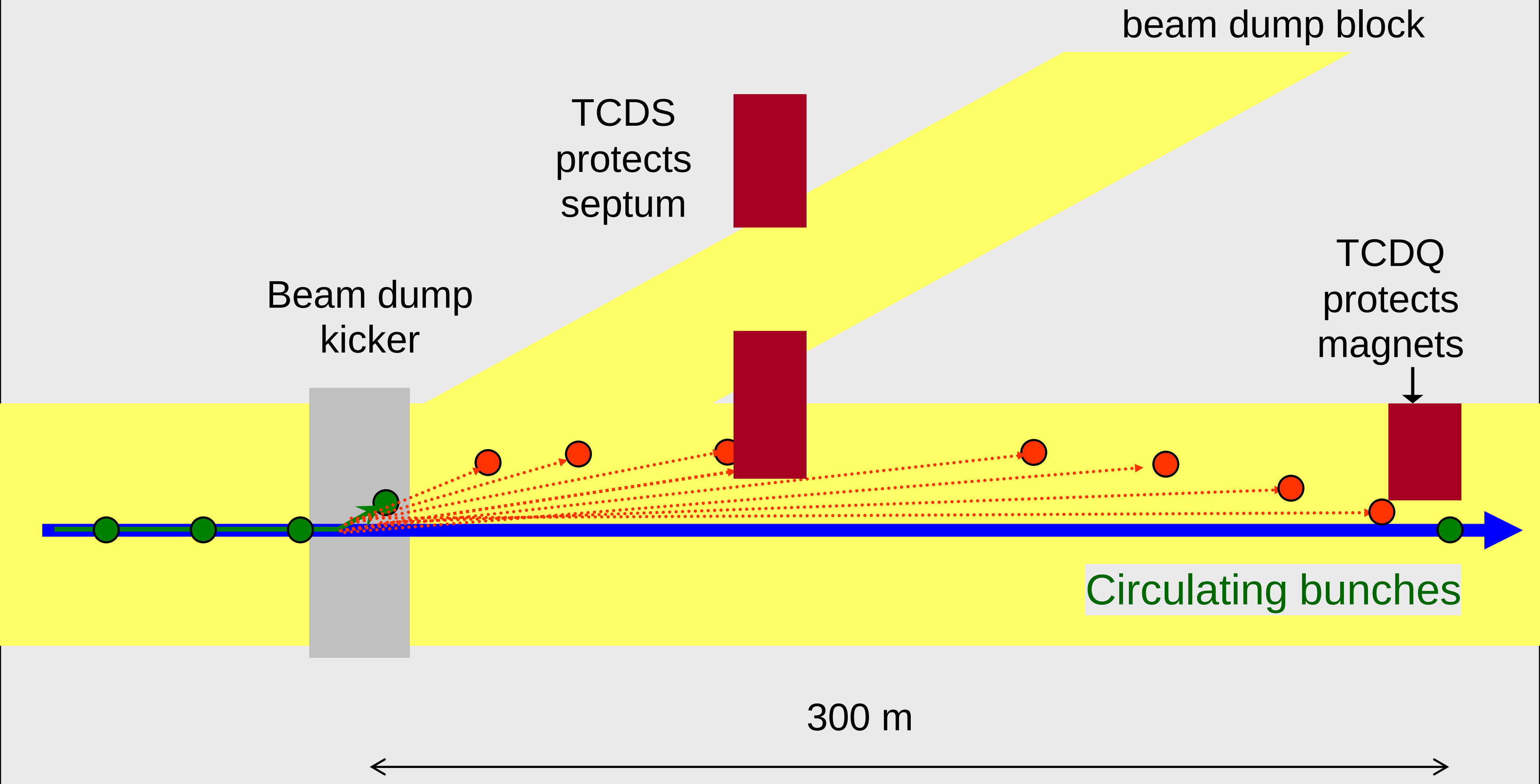

Set distance between closed orbit and TCDQ to protect aperture (10σ)

Capture bunches by beam absorbers

Few bunches that stays in the machine oscillates around closed orbit

Protection when dumping the beam

- Optimisation of beam dump kicker parameters
- Minimise kicker rise-time
- Minimise frequency of asybchronous beam dumps

- Beam absorber downstream the beam dump kicker
- Limit the number of protons that escape into arc

- Limit number of particles in the beam abort gap
  - Protons at top energy lose energy by synchrotron radiation – absorbed by momentum collimators
  - Active gap cleaning is planned (using the transverse damper) – protons absorbed by betatron collimators

Beam Interlock System

Inputs

- Early detection of equipment failures
- Monitoring of beams detects abnormal beam conditions

Actions of the Beam Interlock System

- Inhibit extraction from SPS and injection into LHC
- Trigger beam dump

Tasks

- Reliable transmission of dump requests to beam dumping system and stop injection + extraction from SPS

Beam Interlock System

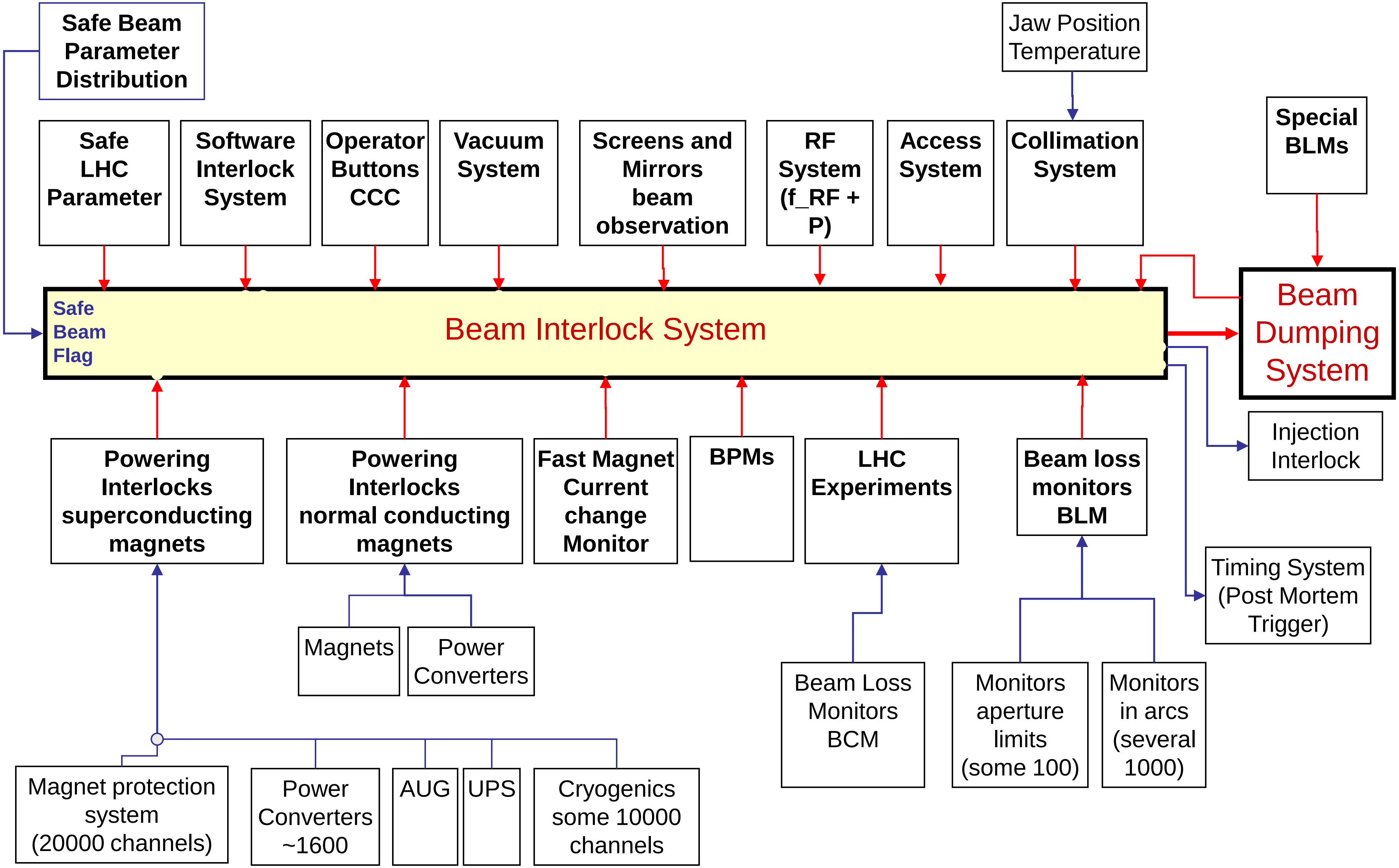

Safe Beam Parameter Distribution

Jaw Position Temperature

Special BLMs

Safe LHC Parameter

Software Interlock System

Operator Buttons CCC

Vacuum System

Screens and Mirrors beam observation

RF System (f_RF + P)

Access System

Collimation System

Safe Beam Flag

Beam Interlock System

Beam Dumping System

Injection Interlock

Timing System (Post Mortem Trigger)

Powering Interlocks superconducting magnets

Powering Interlocks normal conducting magnets

Fast Magnet Current change Monitor

BPMs

LHC Experiments

Beam loss monitors BLM

Magnets

Power Converters

Beam Loss Monitors BCM

Monitors aperture limits (some 100)

Monitors in arcs (several 1000)

Magnet protection system (20000 channels)

Power Converters ~1600

AUG

UPS

Cryogenics some 10000 channels

Beam Interlock System

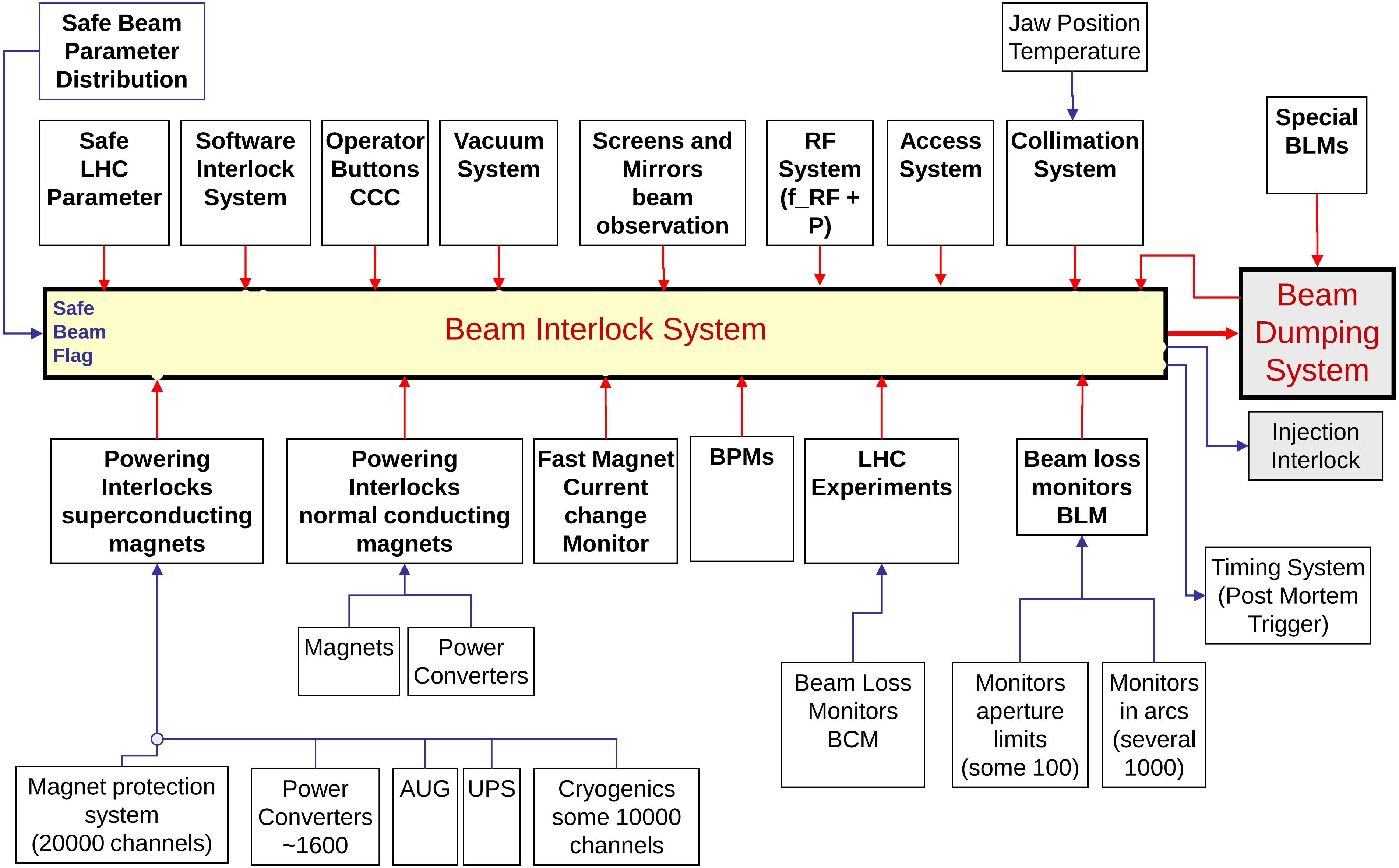

Powering interlocks

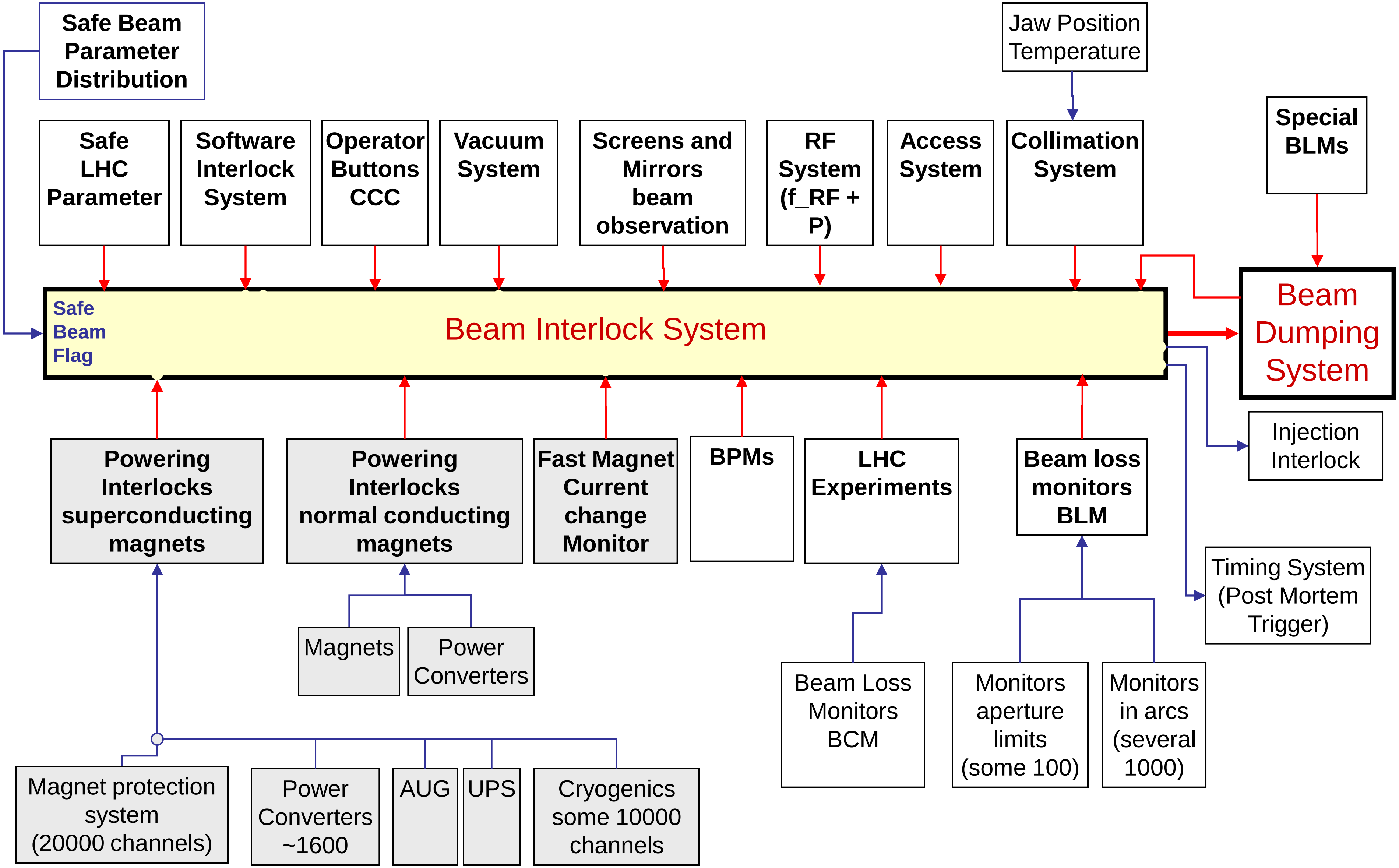

Safe Beam Parameter Distribution

Safe LHC Parameter

Software Interlock System

Operator Buttons CCC

Vacuum System

Screens and Mirrors beam observation

RF System (f_RF + P)

Access System

Jaw Position Temperature

Collimation System

Special BLMs

Safe Beam Flag

Beam Interlock System

Beam Dumping System

Injection Interlock

Timing System (Post Mortem Trigger)

Powering Interlocks superconducting magnets

Powering Interlocks normal conducting magnets

Fast Magnet Current change Monitor

BPMs

LHC Experiments

Beam loss monitors BLM

Magnets

Power Converters

Beam Loss Monitors BCM

Monitors aperture limits (some 100)

Monitors in arcs (several 1000)

Magnet protection system (20000 channels)

Power Converters ~1600

AUG

UPS

Cryogenics some 10000 channels

Interlocks from beam instrumentation

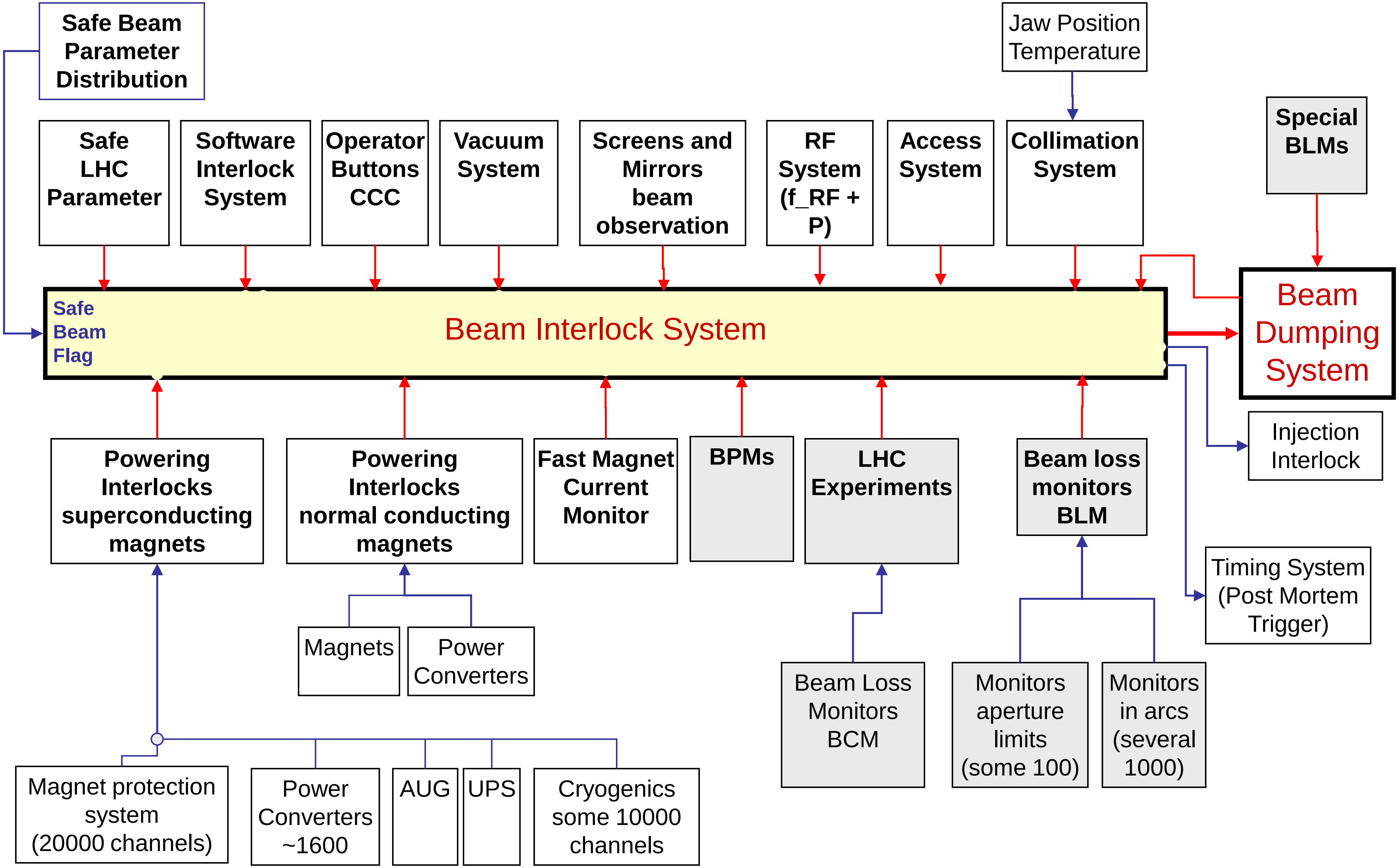

Interlocks from movable devices

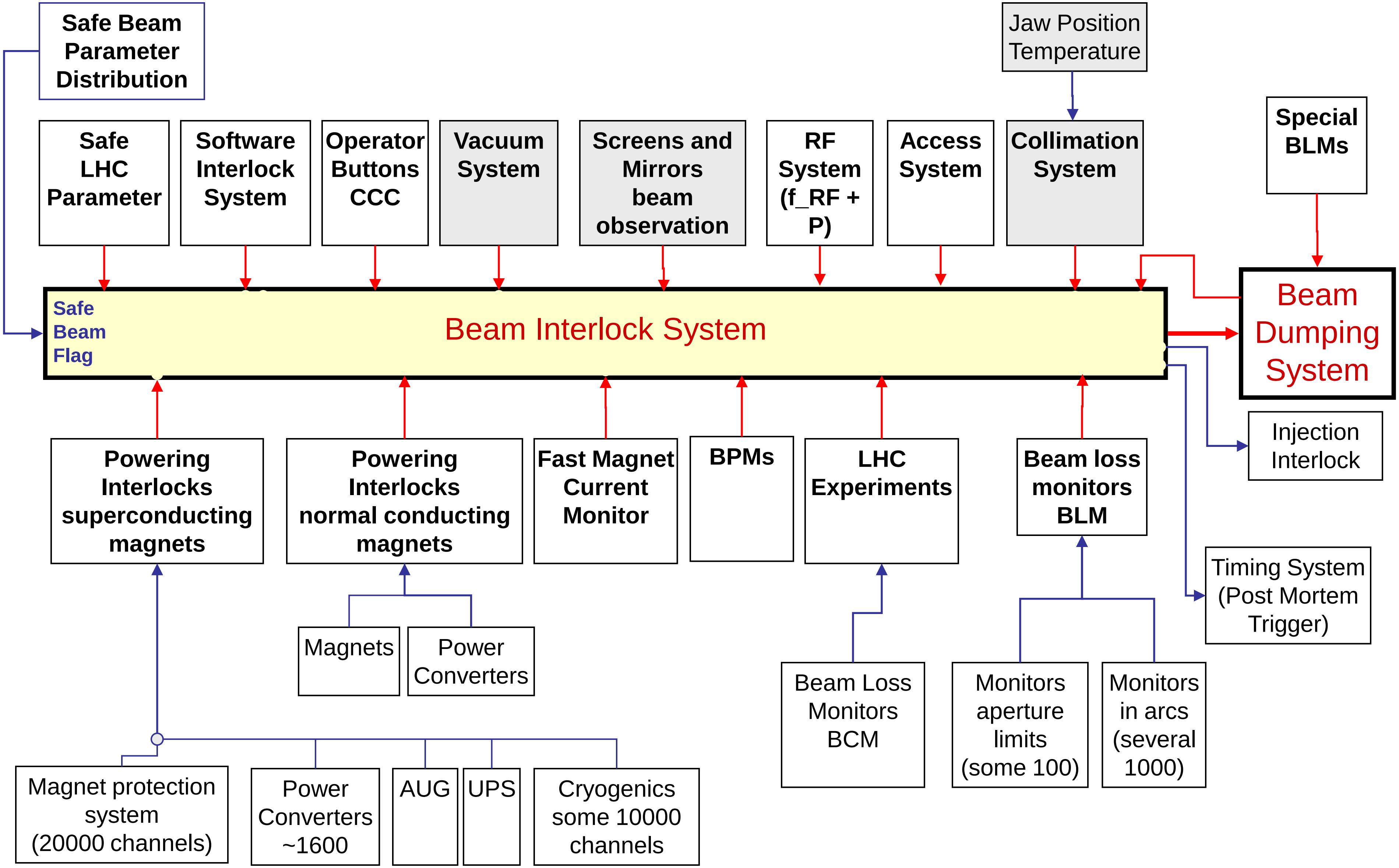

Other interlocks

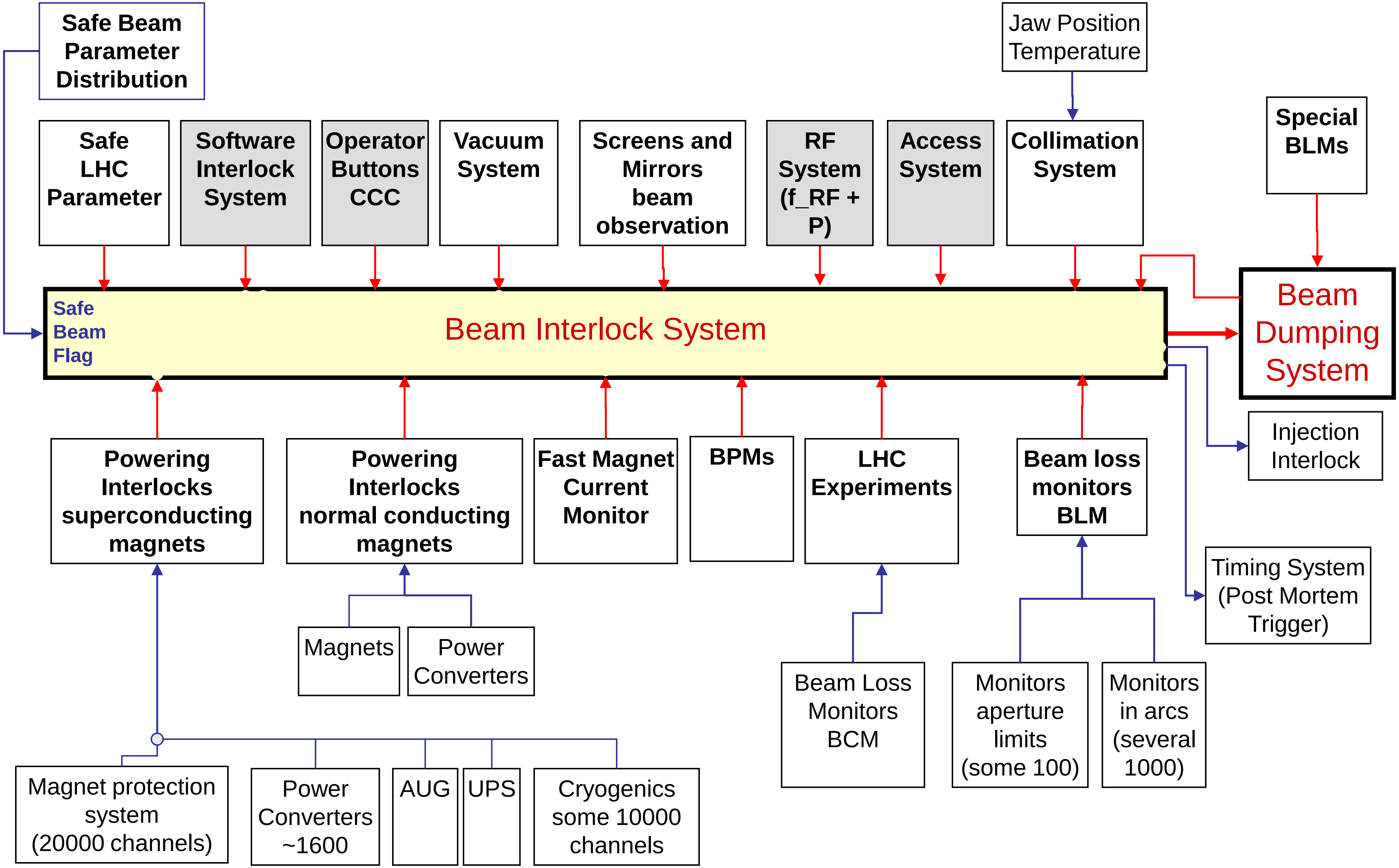

Interlocks Systems: ensure time stamping

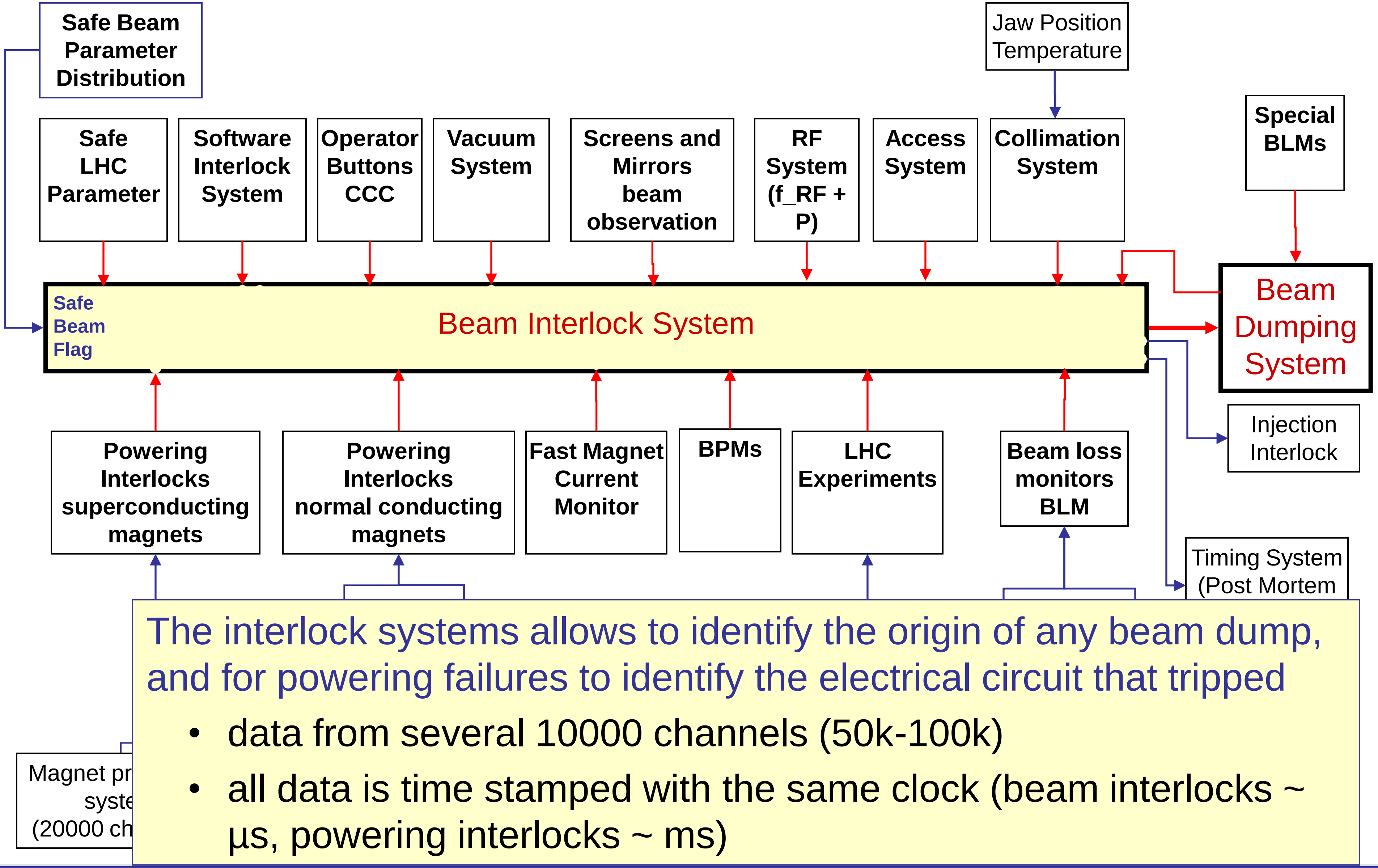

Safe Beam Parameter Distribution

Jaw Position Temperature

Safe LHC Parameter

Software Interlock System

Operator Buttons CCC

Vacuum System

Screens and Mirrors beam observation

RF System (f_RF + P)

Access System

Collimation System

Special BLMs

Safe Beam Flag

Beam Interlock System

Beam Dumping System

Injection Interlock

Powering Interlocks superconducting magnets

Powering Interlocks normal conducting magnets

Fast Magnet Current Monitor

BPMs

LHC Experiments

Beam loss monitors BLM

Timing System (Post Mortem

Magnet pr
syste
(20000 ch

The interlock systems allows to identify the origin of any beam dump, and for powering failures to identify the electrical circuit that tripped

- data from several 10000 channels (50k-100k)
- all data is time stamped with the same clock (beam interlocks ~ µs, powering interlocks ~ ms)

Some design principles for protection systems

- Failsafe design
  - detect internal faults
  - if the protection system does not work, better stop operation rather than damage equipment ("False Beam Dump")
  - possibility for remote testing, for example between two runs
- Critical machine protection equipment is redundant
- Detect failure by (at least) two systems
- Critical processes in machine protection not by software (no operating system)
  - no remote changes of most critical parameters
- Demonstrate safety / availability / reliability
  - use established methods to analyse critical systems and to predict failure rate
- Managing / disabling interlocks
  - masking of (selected) interlocks is required **(keep track !)**

Masking interlocks during initial operation

- There are several ten thousand interlock channels
- Start-up of such a machine is not possible without masking interlock channels
  - Example: commissioning of the beam cleaning system with all beam loss monitors active
- BE PREPARED TO MASK (disable) interlocks! but in a coordinated way
- Setup Beam Flag: inputs into Beam Interlock System can be masked
  - when the beam becomes unsafe (stored energy above setup beam limit), the interlock become automatically enabled
- It is easy to see what interlocks are masked

Steps in commissioning of machine protection

- **Before starting beam operation**, **check interlocks** from all system (as far as possible)
- **Start** with **low intensity beam** (no risk of damage)
- **Commissioning the beam dump system** at different energies
- **Commissioning the beam cleaning system** (80 collimators) at different energies, and for different optics
- Specific tests with beam (**Machine Protection tests**)
- **Analyse operation** (for all beam dumps and for beam losses not leading to a beam dump)
- Early commissioning: **masking of interlocks**
- Exceed the stored energy of the setup beam flag (“safe beam”) – **masking automatically removed**
- **Get confidence** in machine protection to go to higher intensity

Qualification of Machine Protection: tests with beam

- Switching off most critical magnet circuits and study beam response: beam is dumped before orbit change (FMCM)
- Safe Machine Parameter validation checks: detect if beams are dumped when set-up beam flag toggles to FALSE
- Dump the beam during the ramp with operator button at 2 TeV
- Asynchronous beam dump test (RF off + beam dump by operator or by beam instrumentation)
- Beam on resonance to validate collimation hierarchy
- Software Interlock Checks of beam centering in collimator
- Transverse distribution studies moving a collimator into the beam

- Every beam dump must be understood to continue operation, in particular all non-schedule beam dumps

Machine Protection and Controls

- **Software Interlock Systems (SIS)** provides additional protection for complex but also less critical conditions
  - Example: surveillance of magnet currents to avoid certain failures (local bumps) that would reduce the aperture, surveillance of orbit around LHC
  - The reaction time is at the level of a second
  - The systems relies on the computer network, databases, etc – clearly not as safe as HW systems! However, excellent operational experience during several years
- **Sequencer:** program to execute defined procedures
  - To execute defined well-tested procedures for beam operation
- **Logging and Post Mortem systems**: recording of data – continuous logging and for transients (beam dump)
  - Very important to understand the performance of the protection systems

“Post Mortem” after beam dump

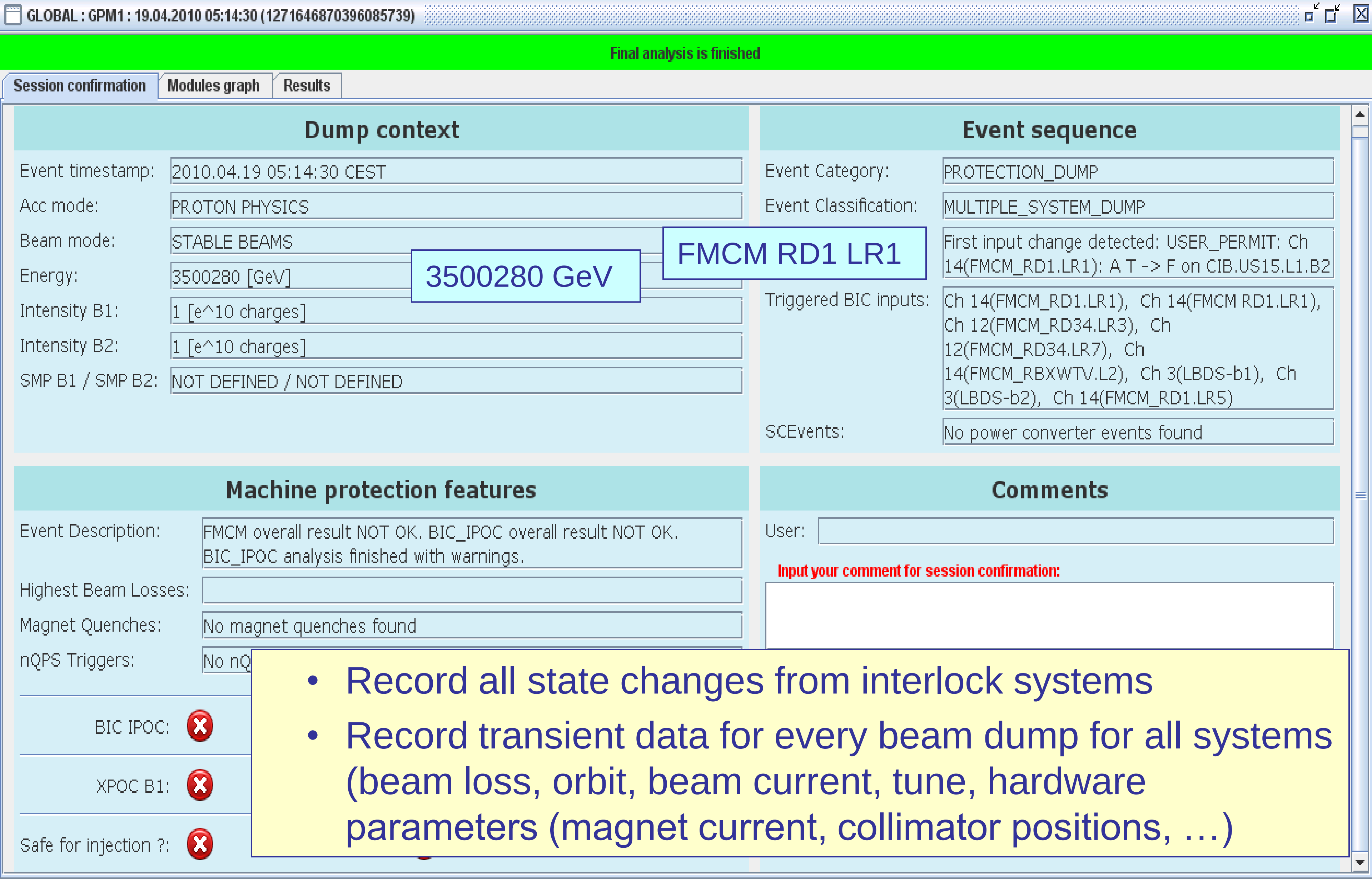

GLOBAL : GPM1 : 19.04.2010 05:14:30 (1271646870396085739)

Final analysis is finished

Dump context

Event timestamp:	2010.04.19 05:14:30 CEST
Acc mode:	PROTON PHYSICS
Beam mode:	STABLE BEAMS
Energy:	3500280 [GeV]
Intensity B1:	1 [e^10 charges]
Intensity B2:	1 [e^10 charges]
SMP B1 / SMP B2:	NOT DEFINED / NOT DEFINED

Event sequence

Event Category:	PROTECTION_DUMP
Event Classification:	MULTIPLE_SYSTEM_DUMP
	First input change detected: USER_PERMIT: Ch 14(FMCM_RD1.LR1): A T -> F on CIB.US15.L1.B2
Triggered BIC inputs:	Ch 14(FMCM_RD1.LR1), Ch 14(FMCM RD1.LR1), Ch 12(FMCM_RD34.LR3), Ch 12(FMCM_RD34.LR7), Ch 14(FMCM_RBXWTV.L2), Ch 3(LBDS-b1), Ch 3(LBDS-b2), Ch 14(FMCM_RD1.LR5)
SCEvents:	No power converter events found

Machine protection features

Event Description:	FMCM overall result NOT OK. BIC_IPOC overall result NOT OK. BIC_IPOC analysis finished with warnings.
Highest Beam Losses:	
Magnet Quenches:	No magnet quenches found
nQPS Triggers:	No nQ

BIC IPOC: ✗

XPOC B1: ✗

Safe for injection ?: ✗

Comments

User:

Input your comment for session confirmation:

3500280 GeV

FMCM RD1 LR1

- Record all state changes from interlock systems
- Record transient data for every beam dump for all systems (beam loss, orbit, beam current, tune, hardware parameters (magnet current, collimator positions, …)

Experience with machine protection

- Many beam dumps at injection, in general for commissioning
- “False” beam dumps: if a protection system dumps the beam because of an internal failure (e.g. noise spikes, problems in connectors, …)
- **212 beam dumps** after the start of the energy ramp from March
- **Most beam dumps are understood** (thanks to the interlock systems and post mortem recording)
  - there are seven beam dumps due to fast beam losses (loss of <1% of the beam intensity), the mechanism for the losses is not understood
- **Not a single quench** with circulating beam
  - Stored energy of **more than 3 MJ** per beam with respect to **10 mJ** for quenching a magnet
  - Cleaning system did an excellent job and detecting failures worked very well
- **Very few beam induced magnet quenches** (“quenchinos”), at injection
  - the threshold of a quench detector was exceeded, the quench heaters fired and quenched the magnet (without firing the magnet would have recovered)
  - one event: main quadrupole current in one sector 350A instead of 760A
  - other events: during aperture studies

Reviews and Documentation

Reviews with external participation for several protection systems have been done in the past

- Machine Protection review in 2005 (overall system)
- BIC audit summary (Sept 06)
- BIC audit sequel summary (June 09)
- LBDS audit summary (Feb 07)
- LBDS audit sequel summary (June 09)
- BLM audit summary (July 08)
- BLM audit sequel summary (June 09)
- MPS internal review (June 2010)
- Collimation system (several reviews)

Systems are documented in EDMS electronic documents, many of the documents required approval (electronic approval)

Approval of systems and approval of modifications that have an impact on protection (such as thresholds for beam loss monitors

Conclusions

- For many Machine Protection sub-systems: **Commissioning finished** before **LHC beam operation** during hardware commissioning (all interlocks related to magnet powering system)
- **Commissioning** of LHC with **low intensity beams**, slowly increasing the intensity, bringing up all machine protection systems
- The beam intensity where interlocks can be masked has been exceeded. LHC operates **with all interlock enabled**
- LHC **can operate** with the **full machine protection** system
- Operational experience and machine protection experiments demonstrated that the **machine protection system works as expected**, no surprises until today
- These are **early days**, two **large steps** in **beam intensity** is still required: **3 MJ to ~25MJ** and ~25MJ to 362MJ (not before 2013)

Acknowledgements

LHC Machine Protection reflects the complexity of the LHC accelerator.

Many colleagues contributed to LHC Machine Protection. We like to thank them and are very grateful for their contributions.

Software Interlock System

Provides additional protection for complex but less critical conditions (e.g. surveillance of magnet currents and closed orbit)

- Example: triggered on large orbit excursion (> 12 BPMs over 6 mm for beam 2 in the horizontal plane (too large RF frequency change)

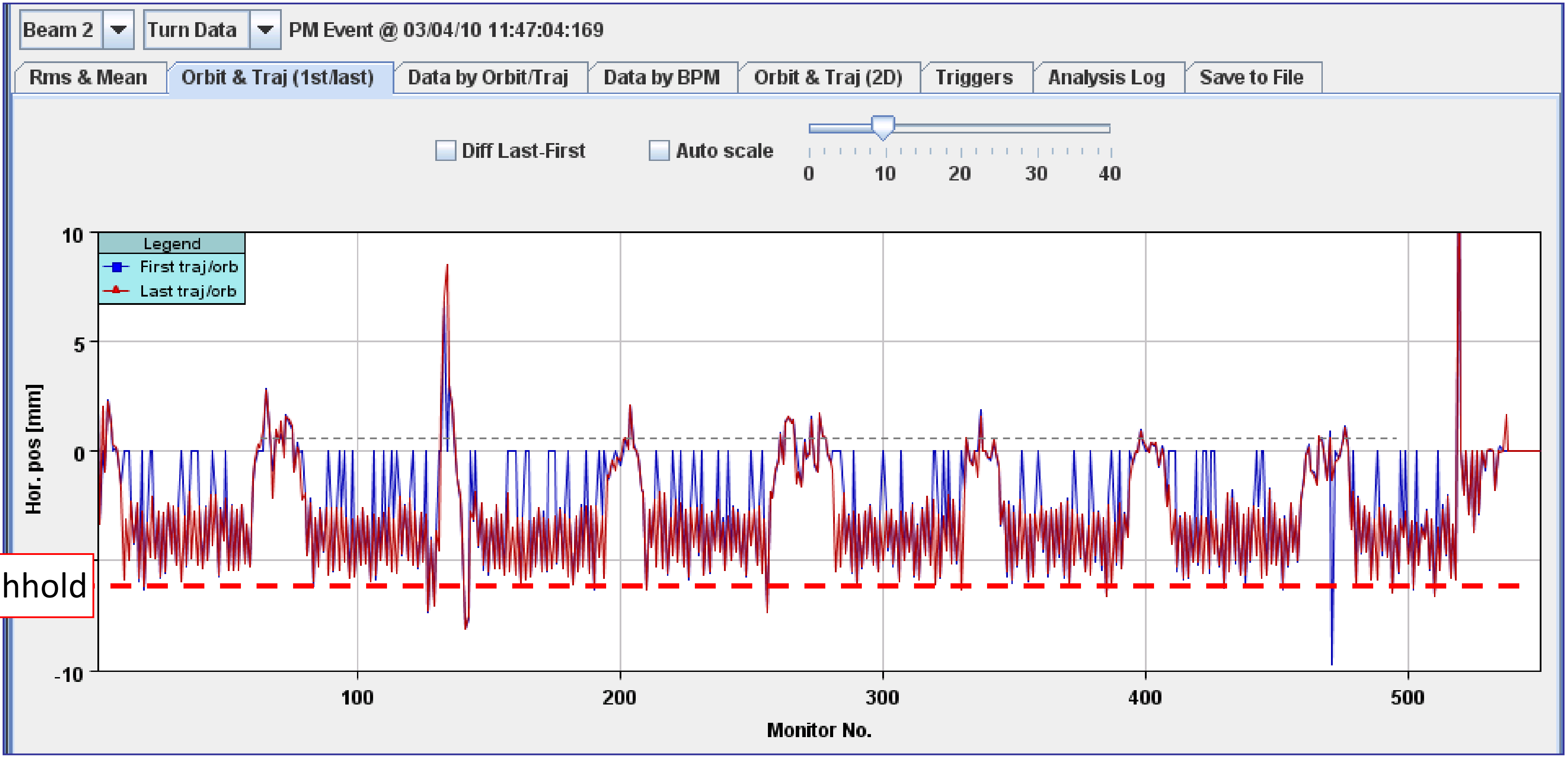

Beam 2 · Turn Data · PM Event @ 03/04/10 11:47:04:169

☐ Diff Last-First

☐ Auto scale

Threshhold

Strategy for protection and related systems

- **Avoid** that a specific **failure** can happen (e.g. no fast vacuum valve if not absolutely required, no aperture kicker, …)

- **Detect failure at hardware level**
- **Detect** initial consequence of failure with **beam instrumentation** ….before it is too late…

- **Stop** beam operation in case of detecting a failure
  - stop extraction from SPS and injection into LHC
  - extract beam into beam dump block
  - stop beam by beam absorber / collimator

Beam instrumentation for machine protection

- Beam Loss Monitors
  - in total, about 4000 Beam Loss Monitors, all connected to interlock system
  - monitor beam losses around the entire accelerator
  - stop beam operation in case of too high beam losses
  - response down 40 μs
- Beam Position Monitors (few monitors, hardwired via the beam interlock system to the beam dumping system)
  - ensuring that the beam has the correct position in insertion with beam dumping system
  - in general, the beam should be centred in the aperture
  - for extraction from SPS towards LHC: monitor extraction bump in SPS using BPMs (redundant to magnet current)
- Beam Position Monitors (via Software Interlock System - SIS)
  - all BPMs around LHC are used