Summary of the 3rd meeting of the xTCA Interest Group

Meeting	Date / Location	# of talks	# of participants
1	September 2010 / TWEPP Aachen	4	*~20*
2	March 2011 / CERN (+ EVO)	7	*~25*
3	September 2011 / TWEPP Vienna	8	*~50*

ATCA developments targeting ITER Fast Plant System Controllers

Bruno Soares Gonçalves / Instituto de Plasmas e Fusão Nuclear

- ITER decided to use PCIe for communication inside the ATCA shelf
- IPFN developments:
  - PCIe switch blade (no COTS product)
  - ATCA controller for PCIe (no COTS product)
  - Modular 24 (48) channel ADC/DAC ATCA board with PICMG 3.8 RTM
  - ATCA cutaway quad-AMC carrier with support for PICMG 3.8 RTMs and WhiteRabbit timing synchronization
- IPFN open for collaborations with other ATCA based projects

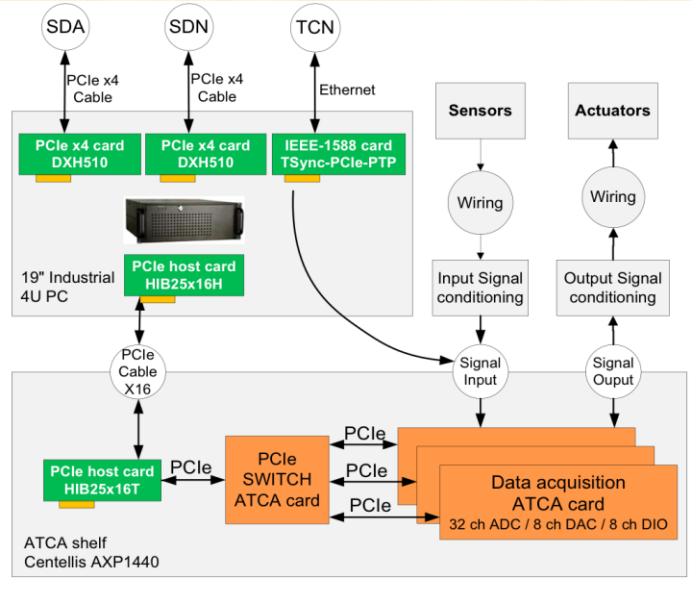

ATCA shelf and PCIe (on cable) links to peripherals

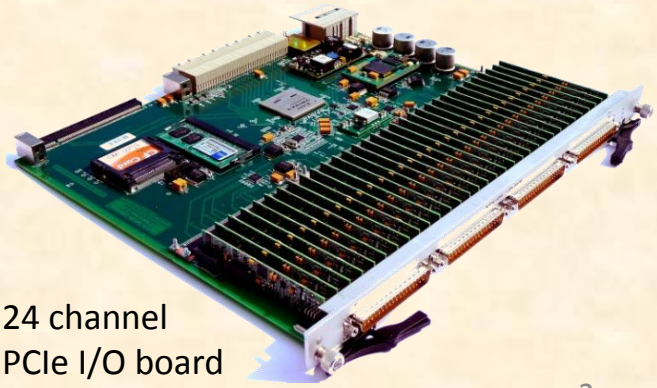

24 channel PCIe I/O board

xTCA in CMS

Magnus Hansen / CERN

- AMC & uTCA selected a few years ago to replace VMEbus (and cPCI) based systems during upgrades
  - Considerable investment made in expertise
  - Some sub-systems may still continue with VMEbus
- Systems with upgrade plans
  - HCAL back end (~2016)
  - L1 trigger (~2016)
- H/W developments:
  - GCT Matrix card (AMC / 2008)
    - Lessons learnt: Preference for double width / full size AMCs
  - HCAL MiniCTR2, MiniT, AMC13, and more
- Desire to standardize (within CMS) on shelf, MMC functions, register access, etc.
- Special use of uTCA ports (AMC13)

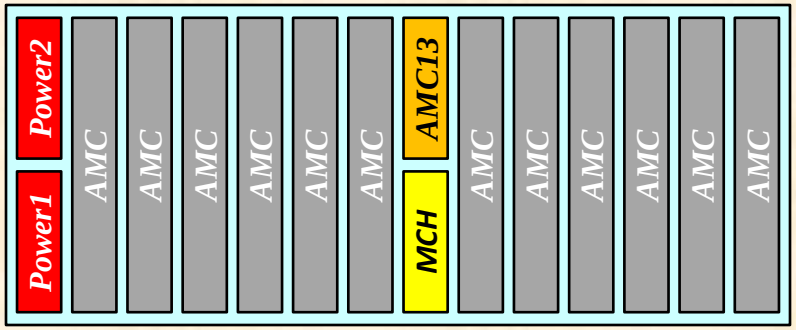

Proposed CMS shelf
- 12 slot
- Vertical air flow
- Redundant PSU
- No RTMs (MTCA.4)

Simplified MCH providing clock/controls/DAQ functions

Eric Hazen / Boston University

AMC13

- Occupying the slot of MCH2 but not a MCH
- Standard interface to CMS sub-detectors
  - Distributes LCH clock / TTC timing / controls to AMCs
  - Collects DAQ data from AMCs
- 4 SFP+ cages for communication with other CMS sub-systems
- 10 complete boards available by end November
- AMC13 (clock distribution) not compatible with PCIe based AMCs

Introduction to MicroHAL / IPbus

Gregory Iles / Imperial College

A method (S/W & F/W) to communicate with FPGAs on modules (e.g. AMCs) over Ethernet

- Robust
- Scalable
- Reasonable bandwidth
- Portable

H/W access based on UDP protocol

- Simple to implement in FPGAs
- Re-gain some performance (wrt TCP/IP) e.g. by command grouping

Extensive reliability tests performed

- Test bench with ~20 IPbus clients
- 7 TB of data transferred

C++ / Python libraries

Ethernet

IPMI

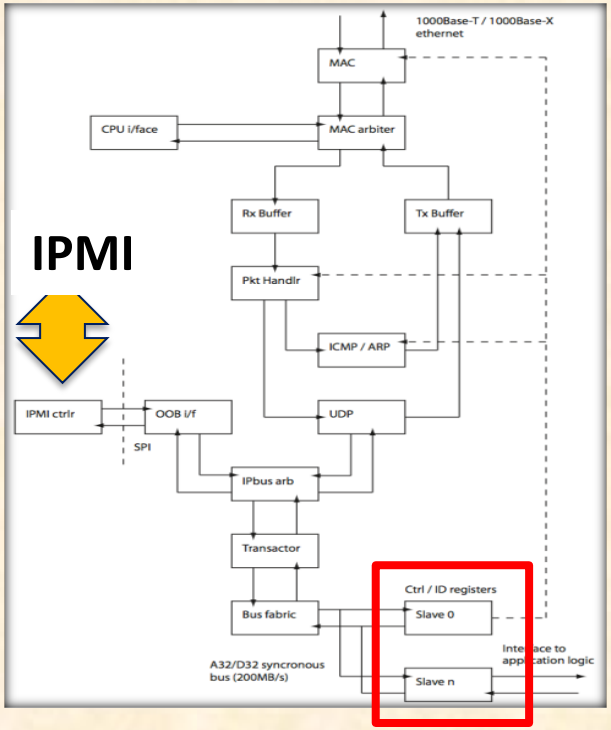

uTCA evaluation project

Markus Joos / CERN

- Investigating interoperability issues with a (small) number of commercial uTCA components
- Developing some "tools" for future H/W evaluations (e.g. shelves & PSUs)
    - MMC mezzanine (-> next slide) and test AMC
    - MTCA.4 load AMC& RTM
- Evaluation of AMC tester (commercial S/W) done
    - Opportunities for sharing it?

MMC test AMC

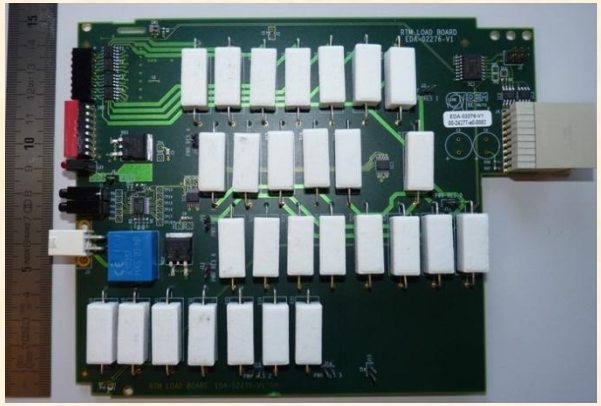

Double wide load RTM (MTCA.4)

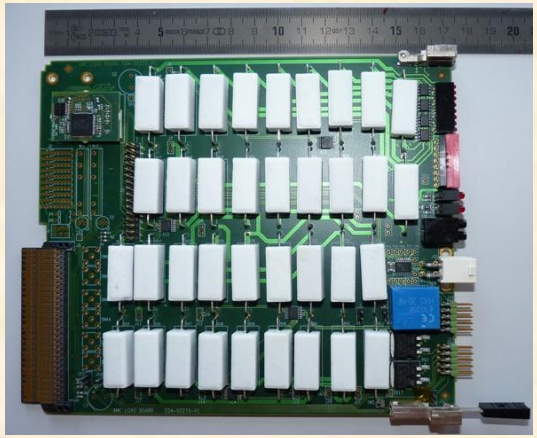

Double wide load AMC

MMC H/W & S/W

Vincent Bobillier / CERN

Based on work done by DESY @ CPPM:

- Development of a MMC mezzanine (now available)
- Development of MMC S/W (ongoing)
- H/W (and S/W) available to other projects

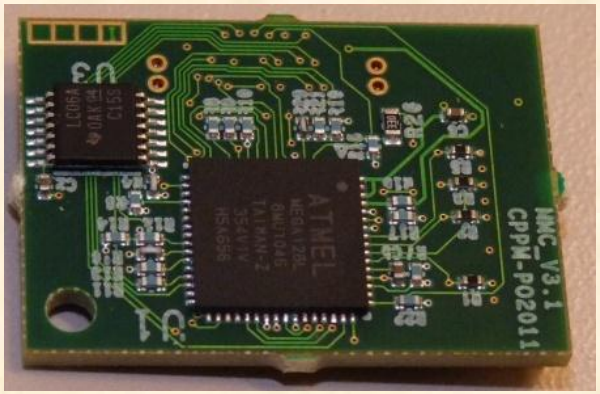

MMC Mezzanine

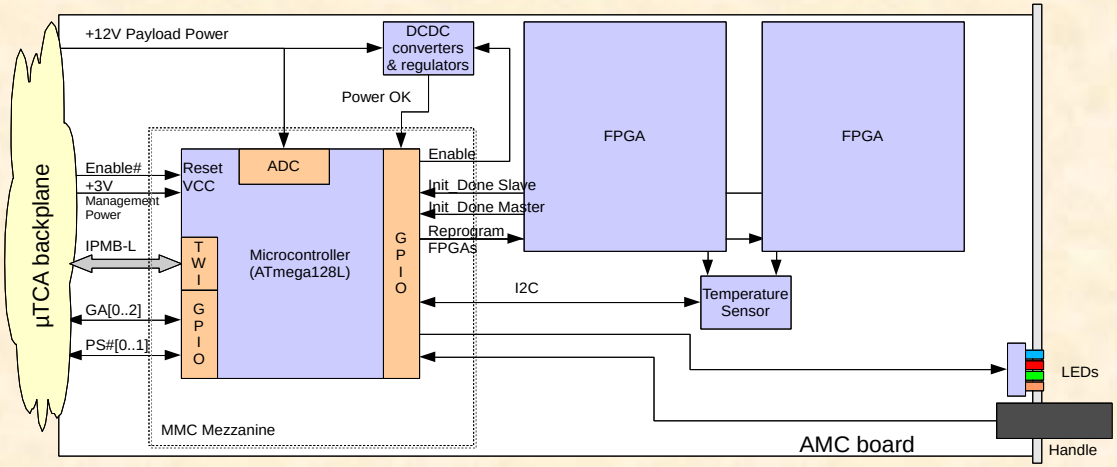

Example of implementation

Perspectives for xTCA in ATLAS

Philippe Farthouat / CERN

- ATLAS DAQ architecture based on separation of VMEbus based RODs and PCI based ROS
  - RODs use VMEbus mainly for control and monitoring
  - VMEbus has been a stable, well supported, easy-to-use platform for a long time (220 crates in ATLAS)
- ATCA (for its high speed backplane and large board size) could be useful especially for calorimeter upgrades
- No large scale deployment planned before Phase-2 (2022)
- ATCA prototype H/W
  - Tile calorimeter ROD
  - lAr ROD
- ATCA has to integrate well into the infrastructure and a clear support structure will be required
- No formal decisions taken so far

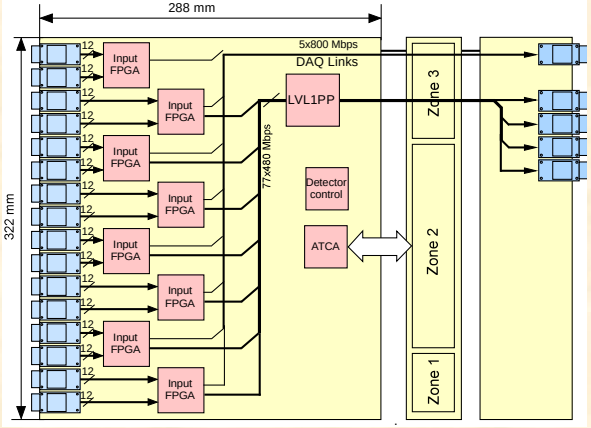

Tile ATCA ROD

lAr ATCA ROD

New xTCA Developments at SLAC

Presented by M. Joos on behalf of Ray Larsen / SLCA

MTCA.4 and PICMG 3.8 PICMG standards released

Committee still working on S/W recommendations


AdvancedTCA®

PICMG® 3.8
Draft RC1.0 for Revision 1.0

AdvancedTCA Rear Transition Module
Zone 3A

26 July 2011

PICMG®
Open Modular
Computing Specifications

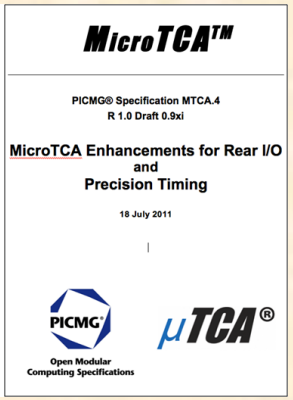
MicroTCA™

PICMG® Specification MTCA.4
R 1.0 Draft 0.9xi

MicroTCA Enhancements for Rear I/O
and
Precision Timing

18 July 2011

PICMG®
Open Modular
Computing Specifications

µTCA®

SLAC H/W developments:

- Linac Coherent Light Source (LCLS) experiments:
  - ATCA based MPP boards used
- Demonstrators for LCLS control systems:
  - Several RTMs (MTCA.4) developed for commercial AMCs
  - Areas of application:
    - Klystron Interlocks
    - LLRF for main Linac S-Band 50 MW station
    - BPM system

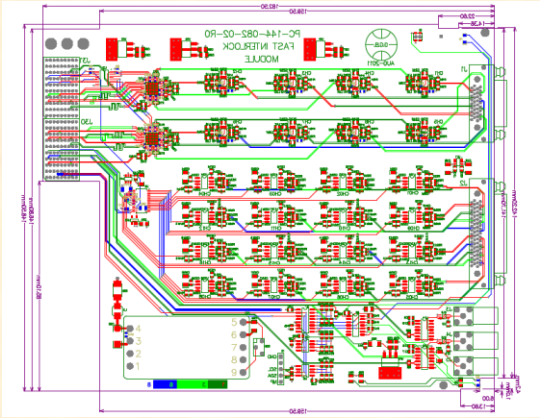

SLAC RTM for FPGA AMC

Additional information

Next IG meeting

Tentatively scheduled for March 2012 (@CERN, with EVO)

xTCA IG web site

twiki.cern.ch/twiki/bin/view/XTCA/WebHome

Mailing list

xtca-news@cern.ch