The Electronics System of the ALFA Forward Detector for Luminosity Measurements in ATLAS

Presenter : F. Anghinolfi

B. Allongue[1], J. Alozy[1], G. Blanchot[1], S. Franz[1], W. Iwanski[1], V. Lorentzen[2] , B. Lundberg[3], S. Jakobsen[4], K. Korcyl[5]

[1]CERN, [2]HIST Trondheim , [3]Lund University, [3]NPI Copenhagen, [5]INP PAN, Cracow

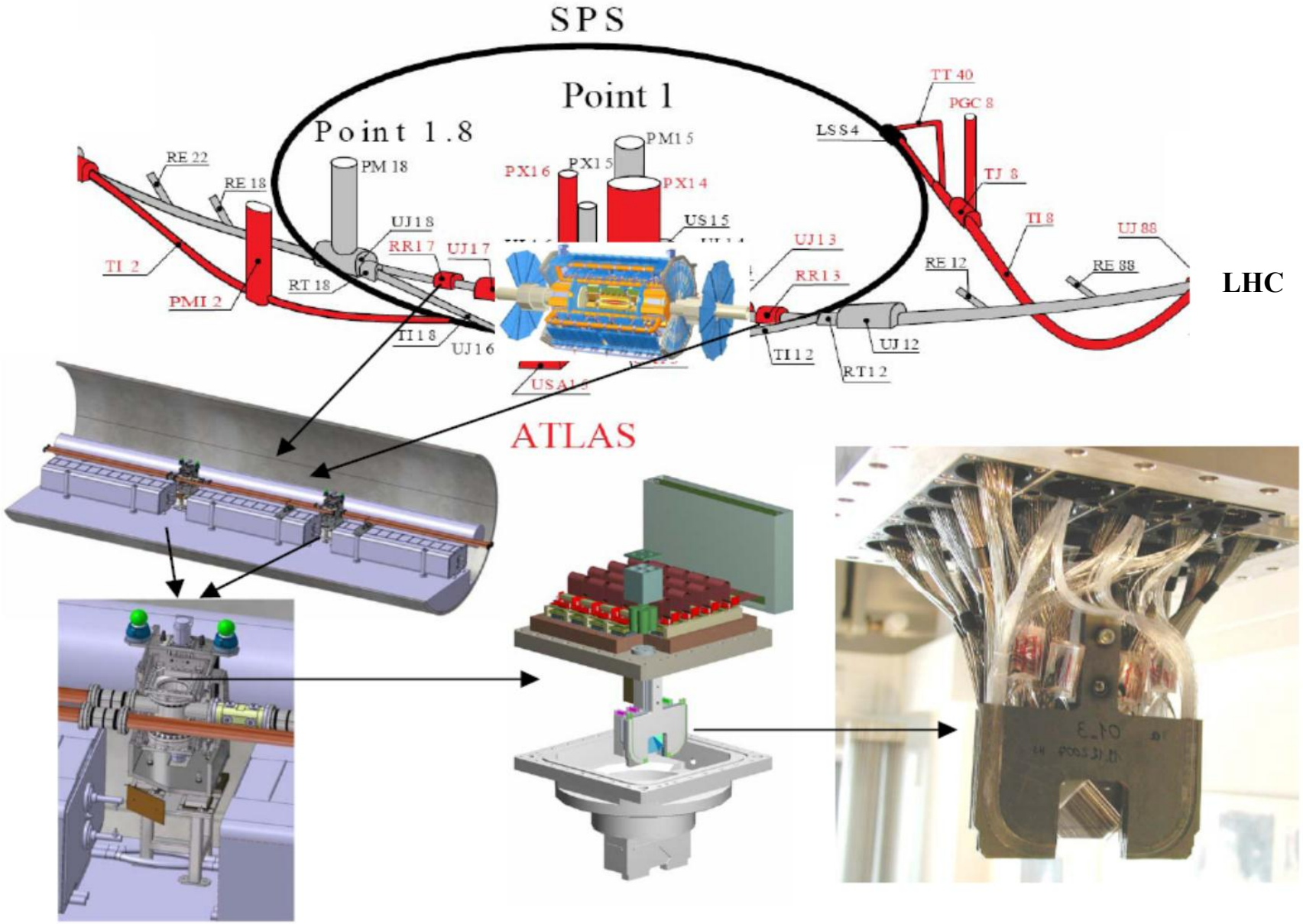

Mechanics

Electronics

Detector

ALFA : Absolute Luminosity Measurement

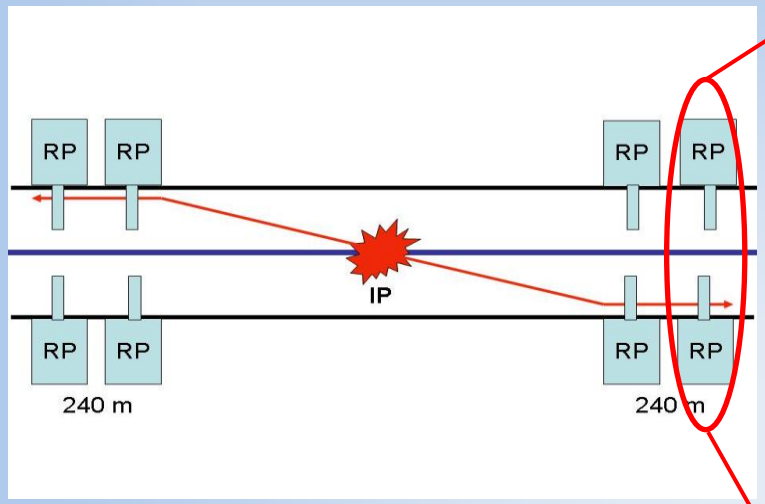

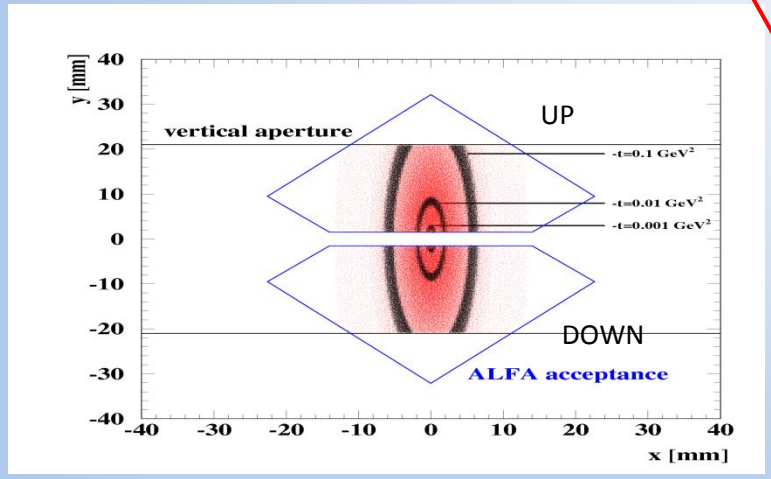

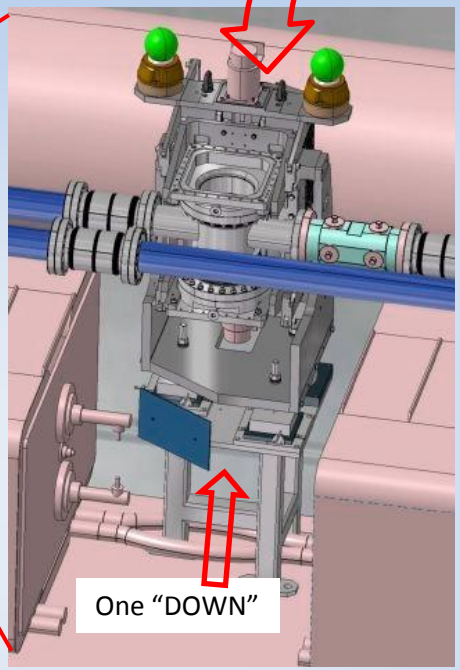

One "UP"

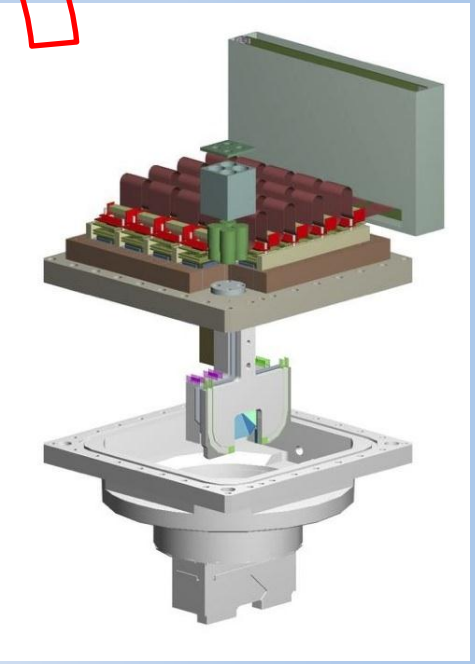

Two small trackers symmetrically placed around the proton beam, the detector to beam distance can be as low as 1.5mm. Measure the elastic beam scattering at very low distance of the beam.

Each "RP" is a 20x20mm mini tracker made of 10 planes of staggered scintillating fibers in U and V directions, plus 2 scintillating plates covering the tracking area for producing trigger signals

ALFA R/O electronics

In alcove : LV
power supplies

RR13
alcove

USA15
counting
room

USA15 :
HV units
DCS control & monitor
ROD
LV PFC and control
CTP

In alcove : LV
power supplies

RR17
alcove

250m + through tunnel & galleries

250m + through tunnel & galleries

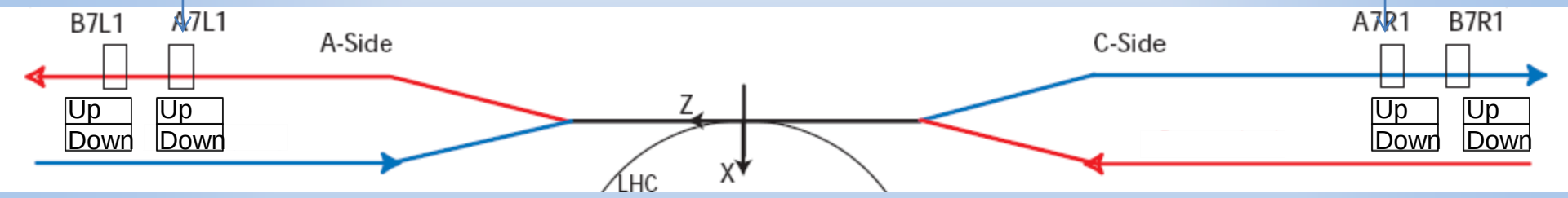

Each station (A, B):
2 pots (up and down)
2 readout systems (PMF + Motherboard)
1 (main) Patch Box
2 HV dispatchers

For A&B :
1 optolink dispatcher

Each station (A, B):
2 pots (up and down)
2 readout systems (PMF + Motherboard)
1 (main) Patch Box
2 HV dispatchers

For A&B :
1 optolink dispatcher

ALFA R/O electronics

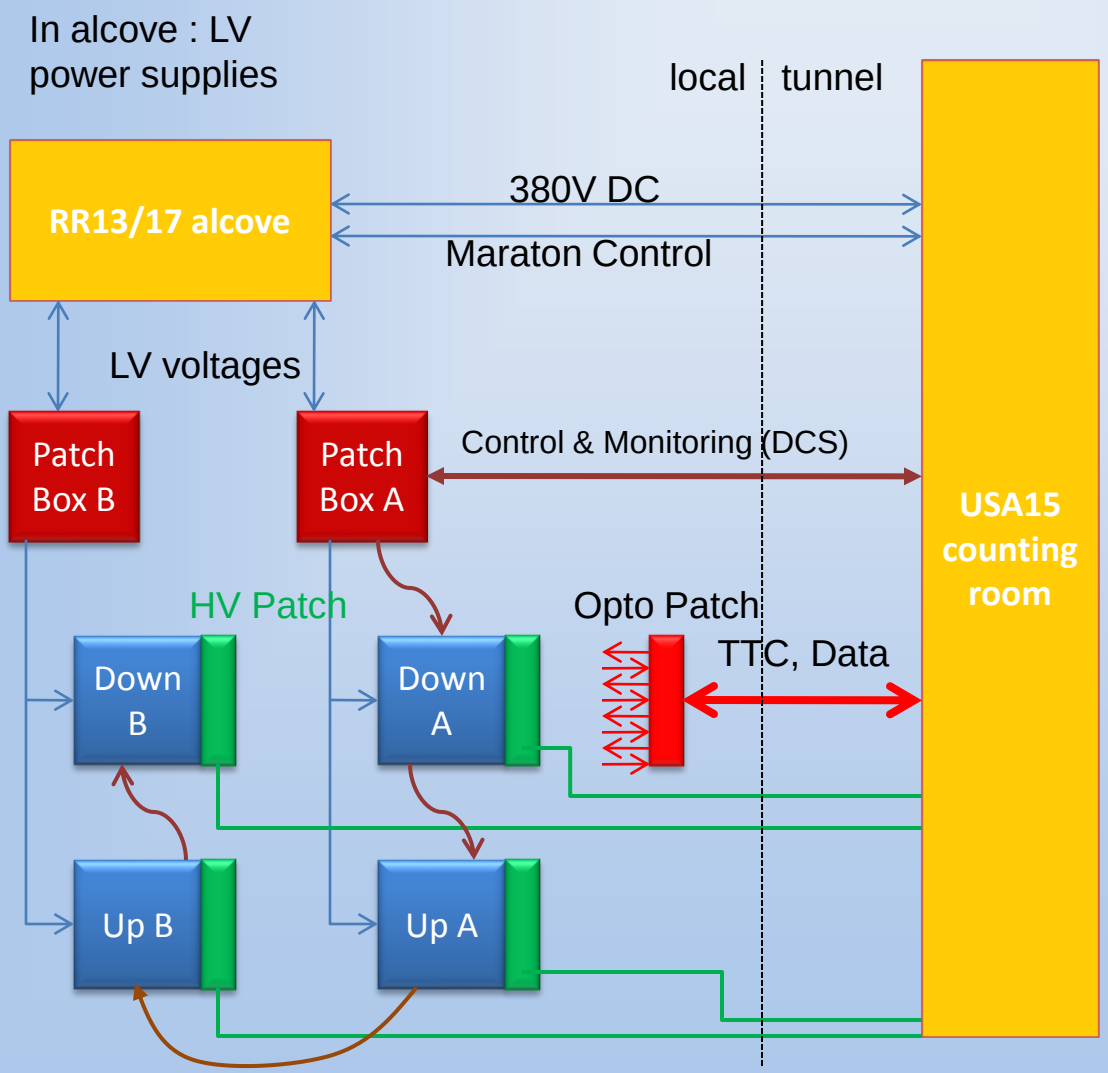

USA15 :
HV units
DCS control & monitor
ROD
LV PFC and control
CTP

Connections	Source/dest.
LV Power	Local alcoves
TTC	USA15, fiber
Data (Read)	USA15, fiber
Control & Monitoring	USA15, CAN bus
HV	USA15, electrical

ALFA R/O electronics

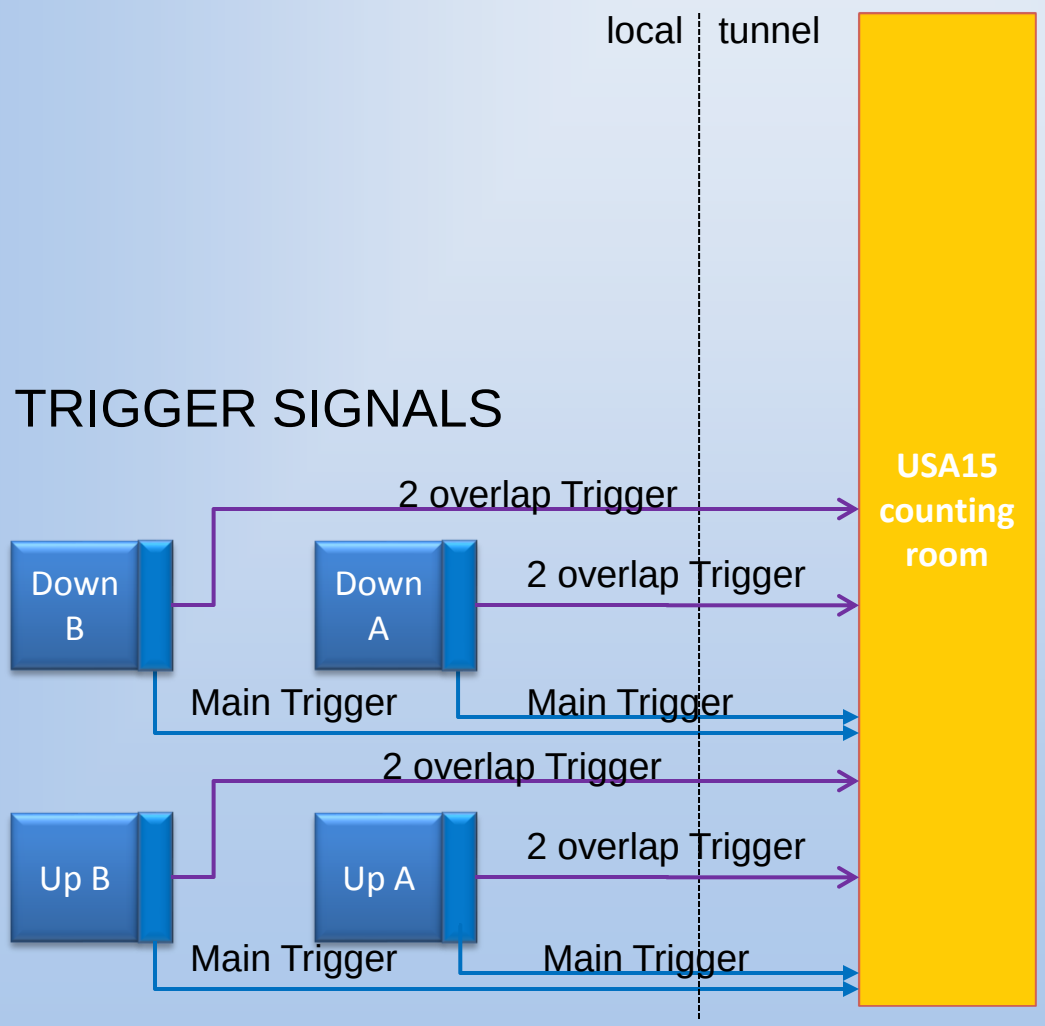

USA15 :
HV units
DCS control & monitor
ROD
LV PFC and control
CTP

Connections	Source/dest.
Main Trigger	Air core, USA15 (CTP)
OVLP Trigger	USA15, electrical

ALFA R/O electronics

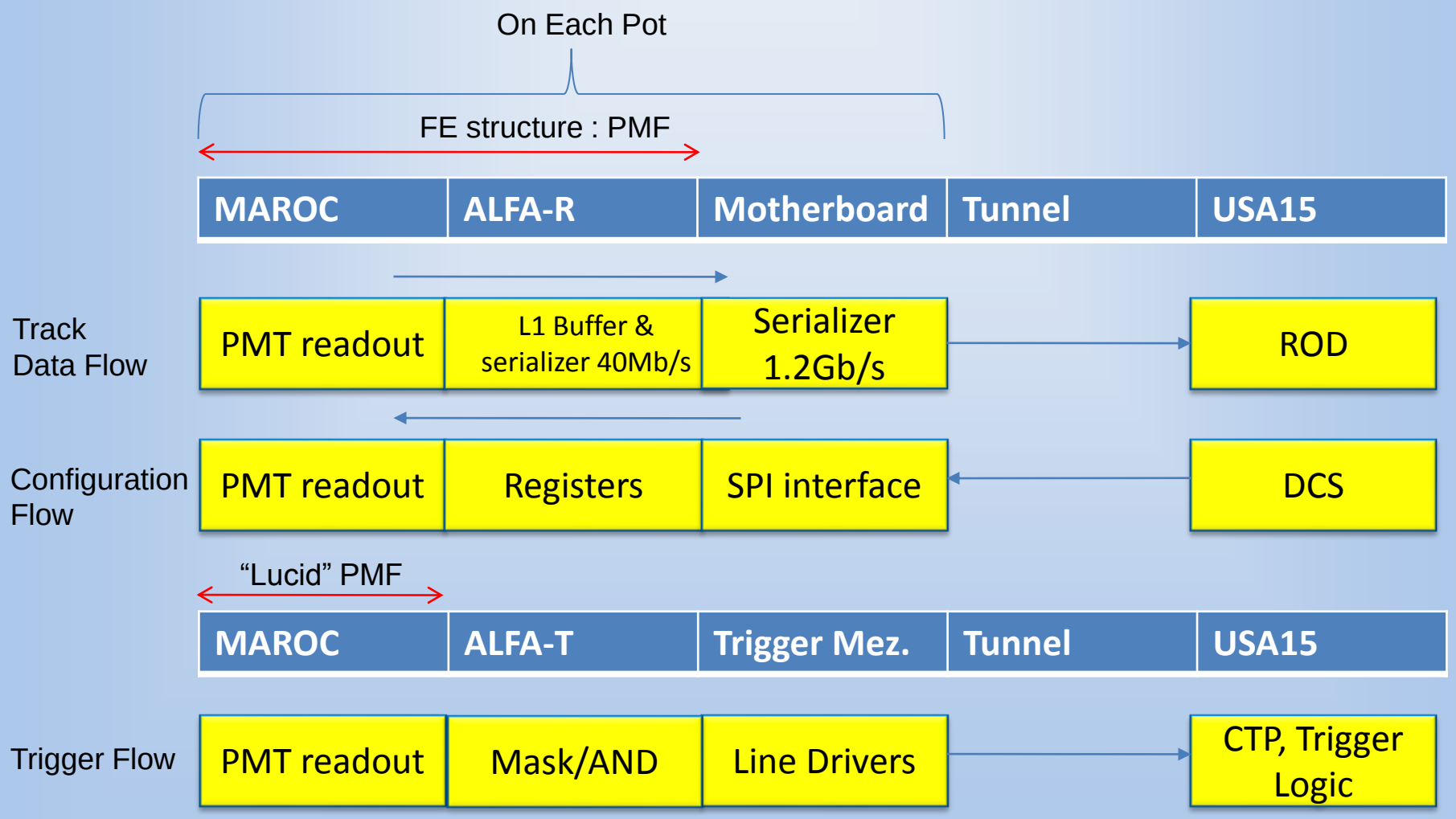

ALFA R/O electronics

Tracking Data flow on each detector

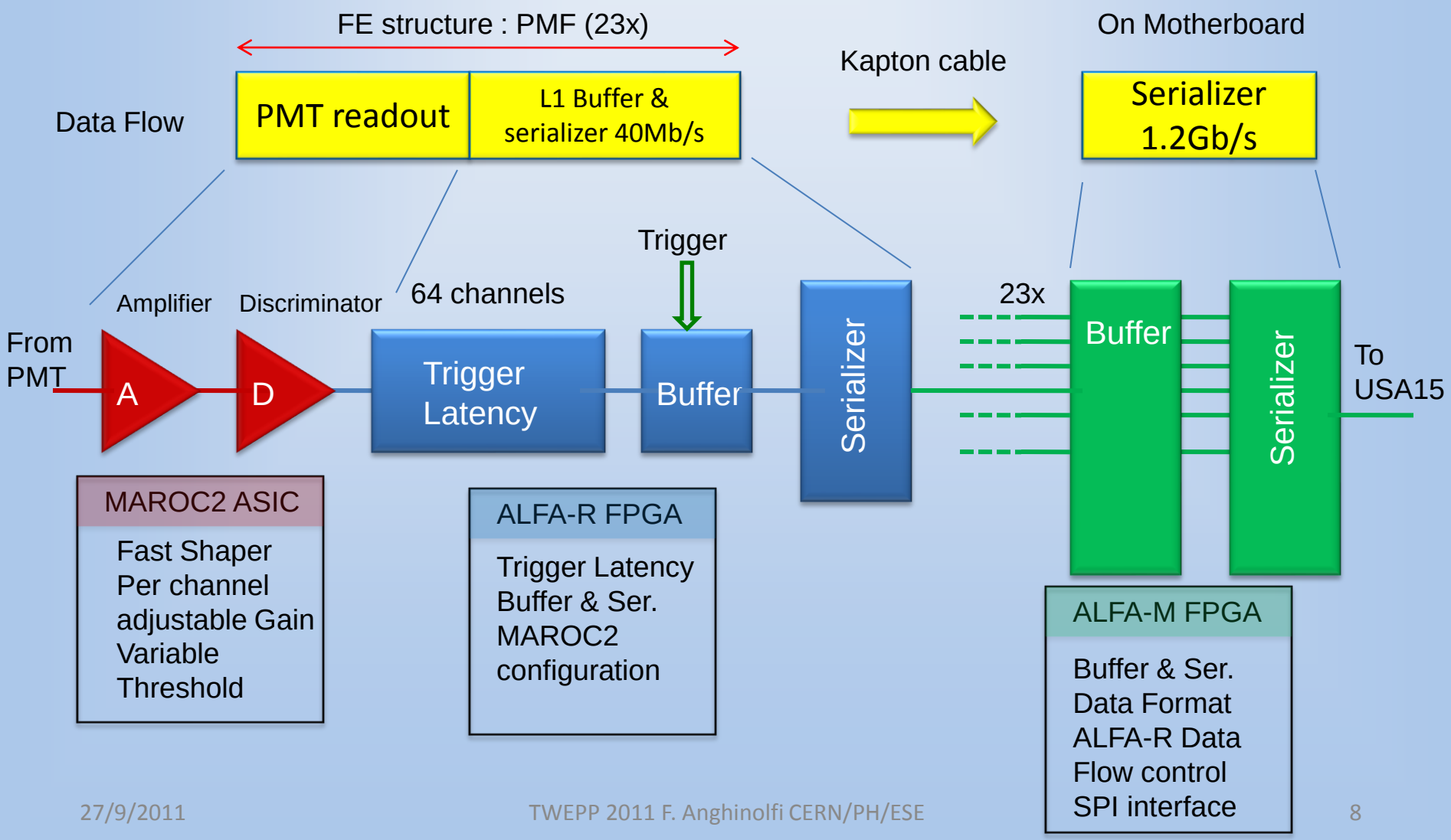

ALFA R/O electronics

- Aimed for compact, removable electronics
- Minimal cabling constraints (from USA to RP)
- FE Electronics centered around the MAROC2 ASIC developed by LAL/Orsay for MA-PMT readout systems
- Partial Radiation Hardness (Power supplies and regulation, ELMB, TTC GOL QPLL etc …)

Detector and Front-End Parts

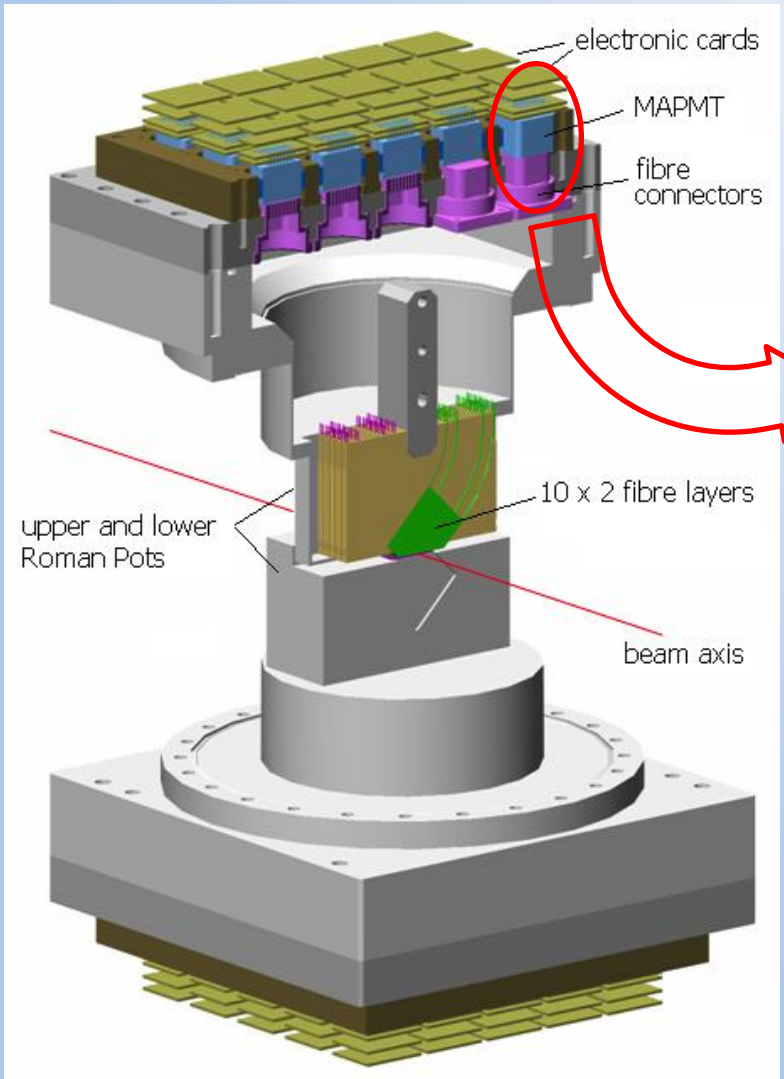

3 stacked PCB mounted on the MAPAMT pins : HV distribution, signal distribution, active layer (pictures on the right)

MAROC side

ALFAR FPGA side

Detector View

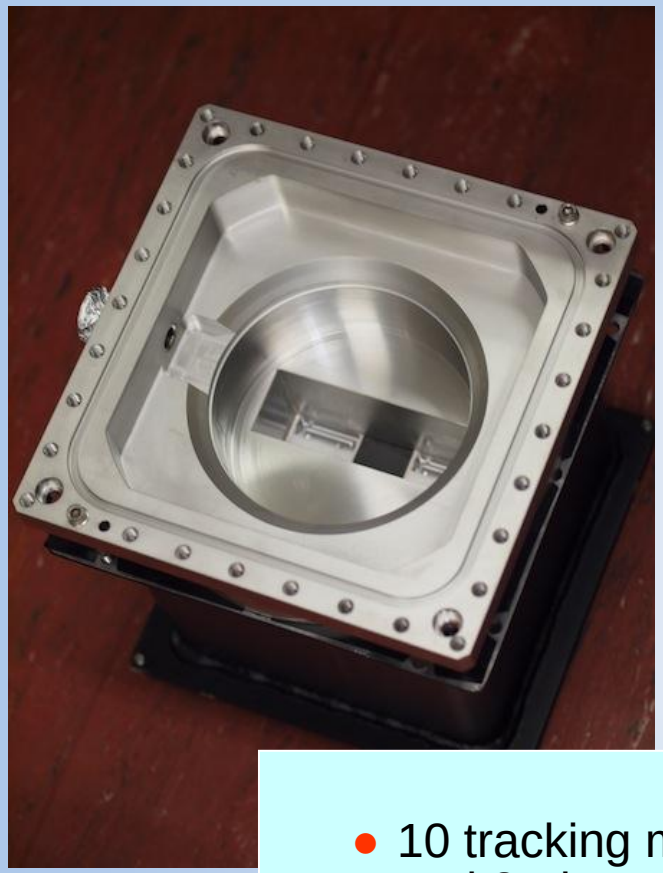

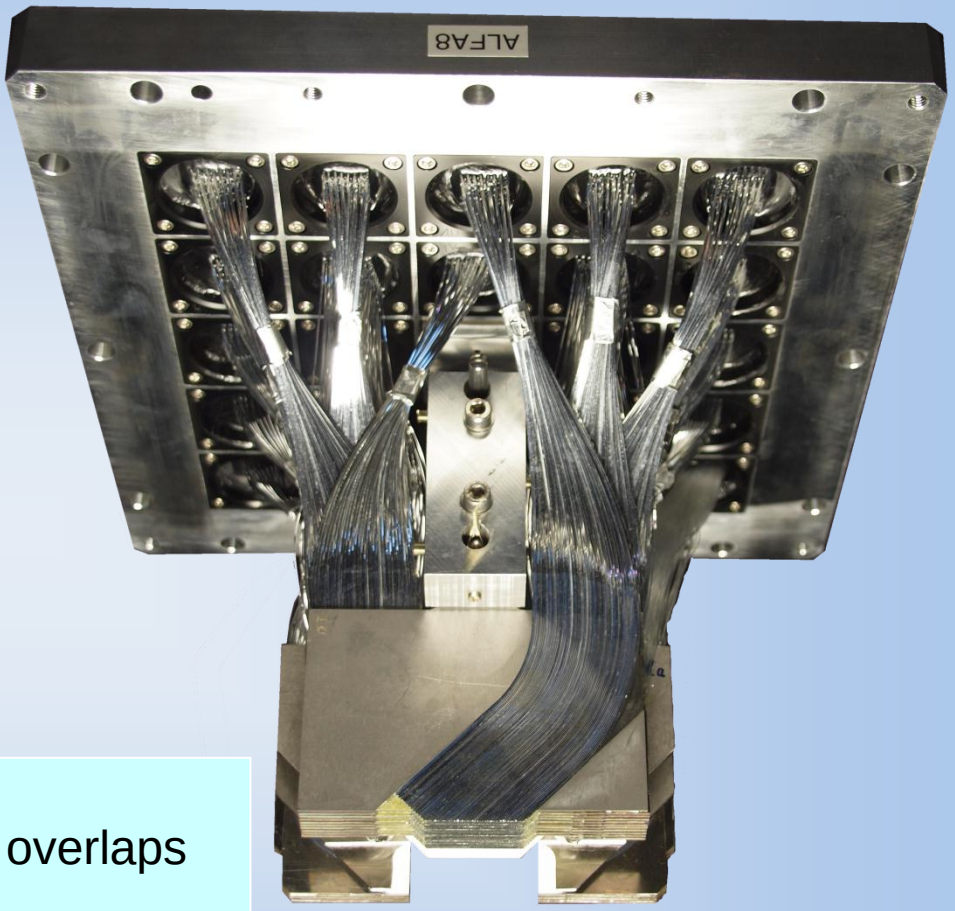

- 10 tracking modules, 3 overlaps and 2 triggers
- 1460 fibres and trigger lightguide bundles to optical connectors
- 2 LED and 2 PT100 sensor

ALFA Electronics on each pot

Connections	Source/dest.
LV Power	Local alcoves
TTC	USA15, fiber
Data (Read)	USA15, fiber
Control & Monitoring	USA15, CAN bus
Triggers	USA15, electrical

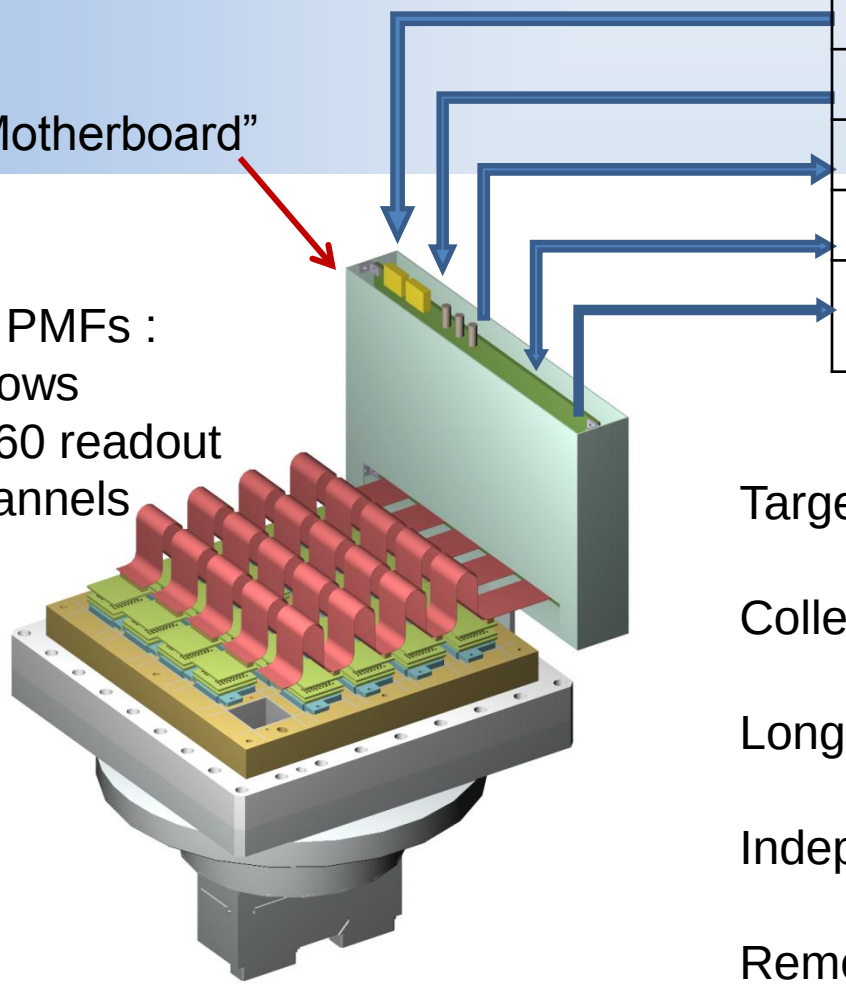

Targets :

Collects and serialize data from 23 PMFs

Long distance links to USA15 (no repeaters)

Independent control and monitor through ELMB

Removed from tunnel when not in use

Functions distributed in the front-end electronics

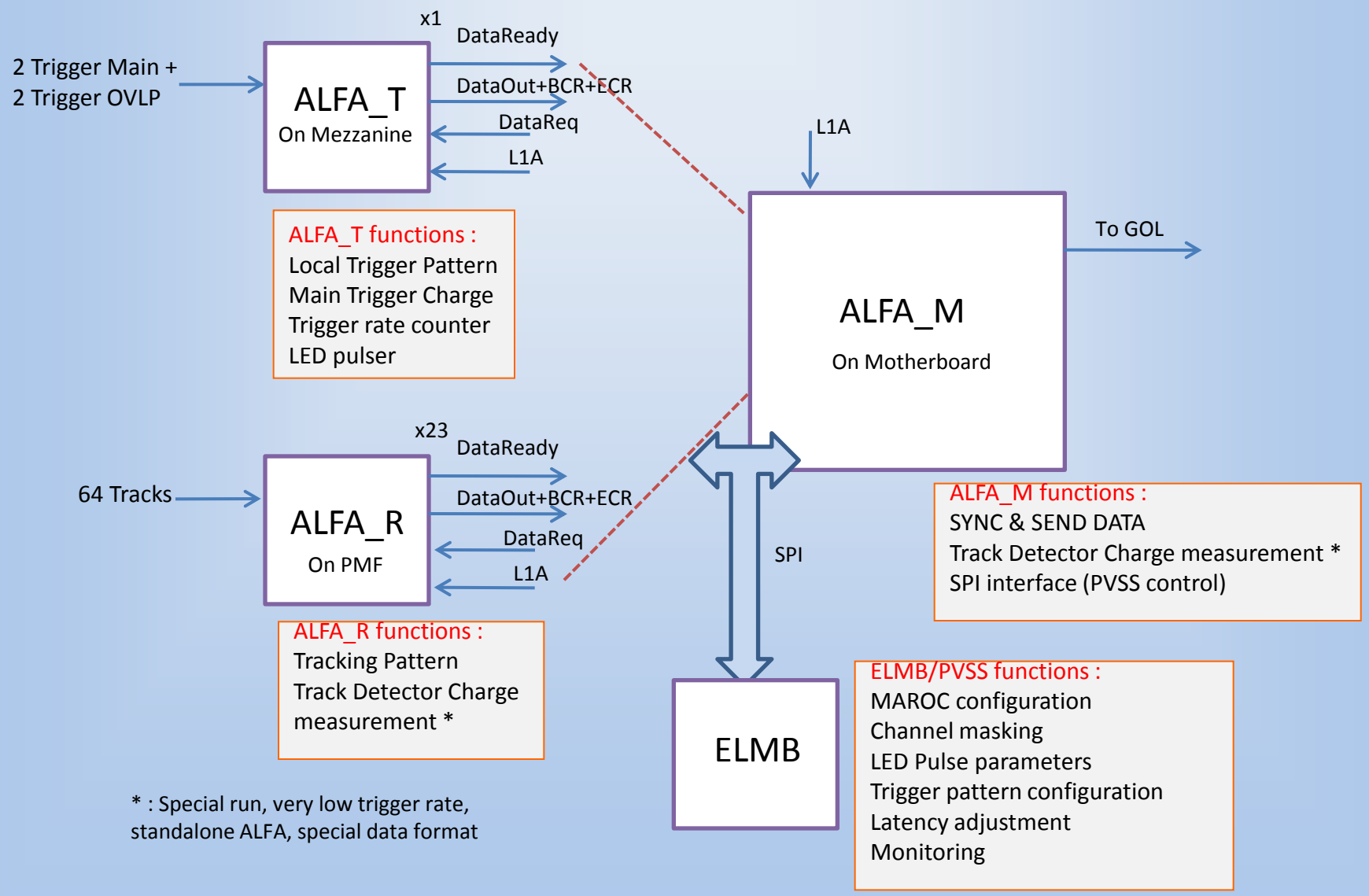

* : Special run, very low trigger rate, standalone ALFA, special data format

Motherboard Main Functionalities

- 23 PMFs for measurement with 64 pixels >> 64 bits of data for each PMF
- PMF passes its raw data serially to the ALFA-M controller
- ALFA M collects raw data with the same L1ID and then transmit it through a GOL link to the ROD

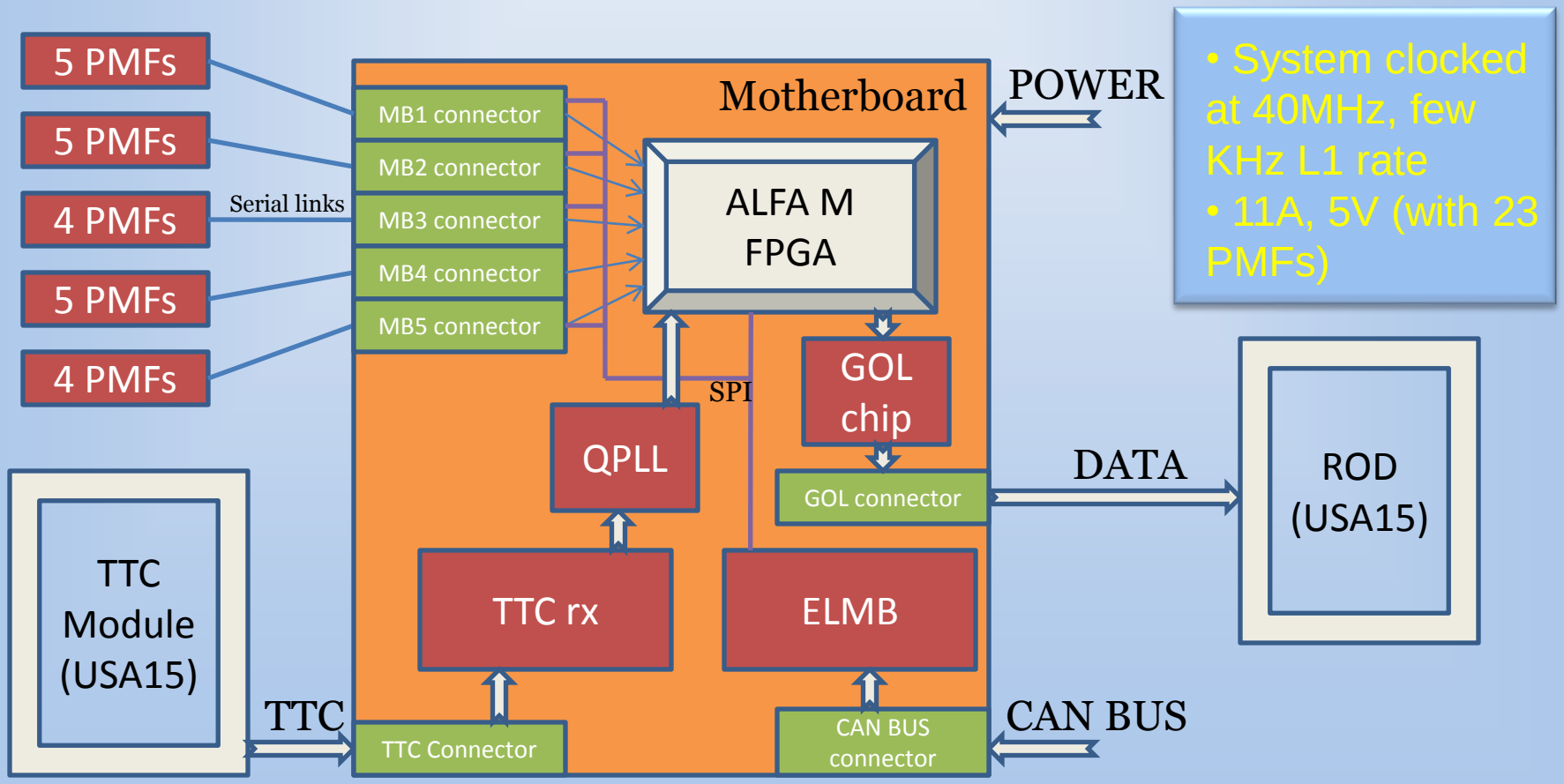

Motherboard Details

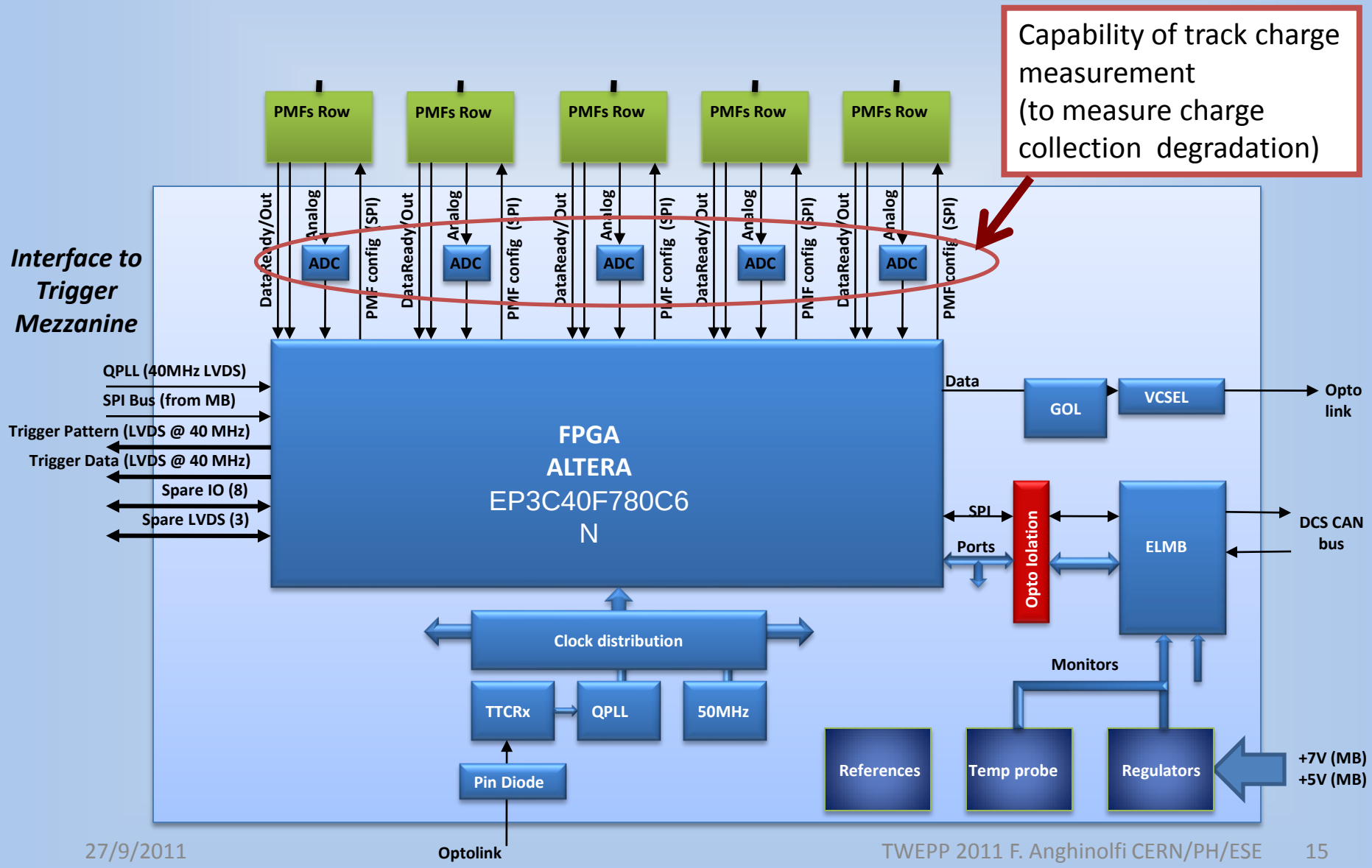

Trigger Mezzanine Functionalities

- 4 “LUCID” PMFs for Trigger charge measurement and time detection
- Triggers Outputs are programmable combination of Trigger inputs (2 main, 2 OVLP)
- Two programmable pulse generators for in-detector test LEDs

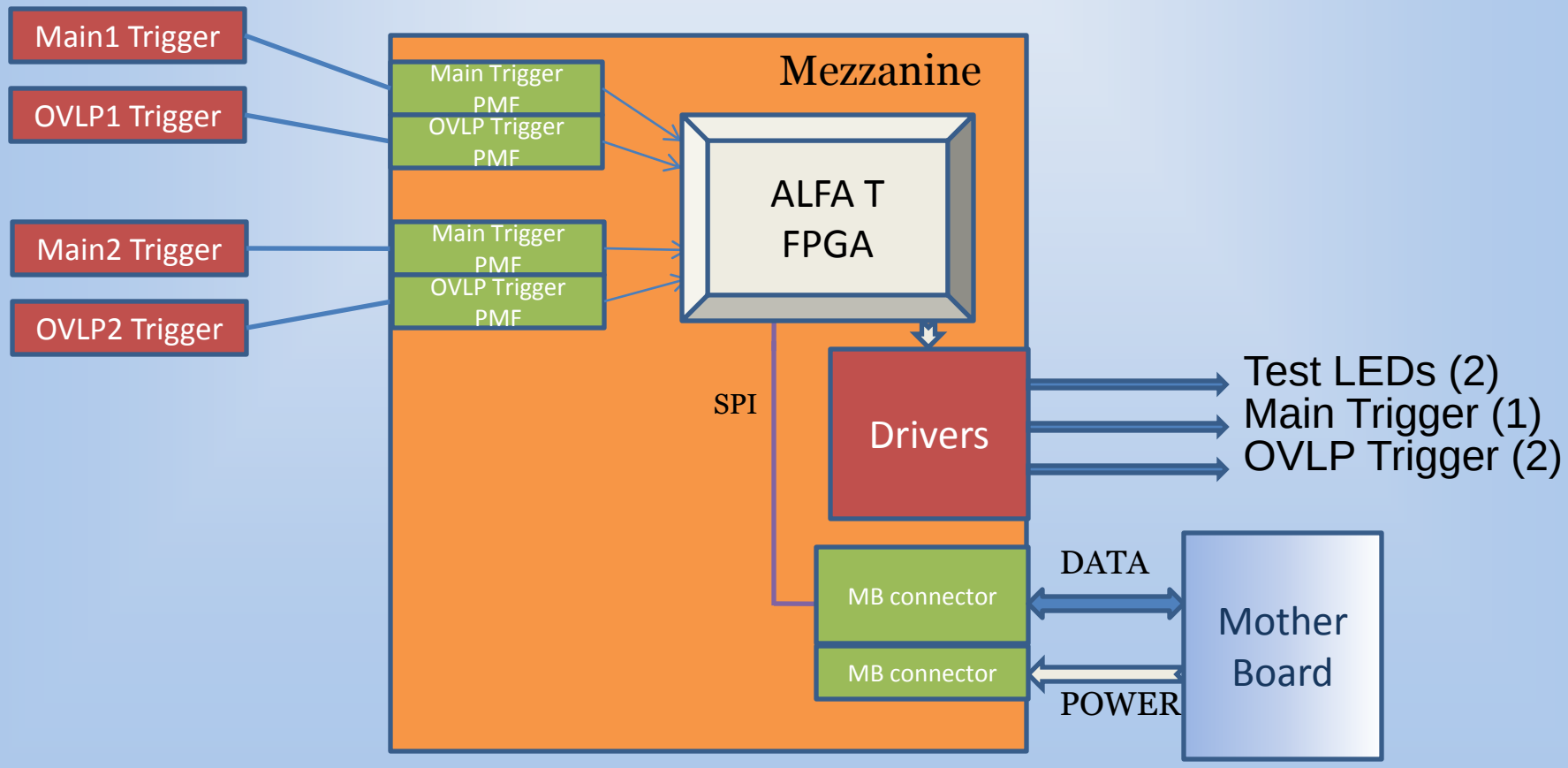

Trigger Mezzanine Details

Capability of trigger charge measurement : the trigger charge is measured and transmitted at every L1, together with tracking data and the trigger pattern

Interface to "LUCID" PMFs (LUND Devlpt.)
Two PMFs plugged on the mezzanine;
Two interface holding lemo inputs and attenuators on top of LUCID PMFs.

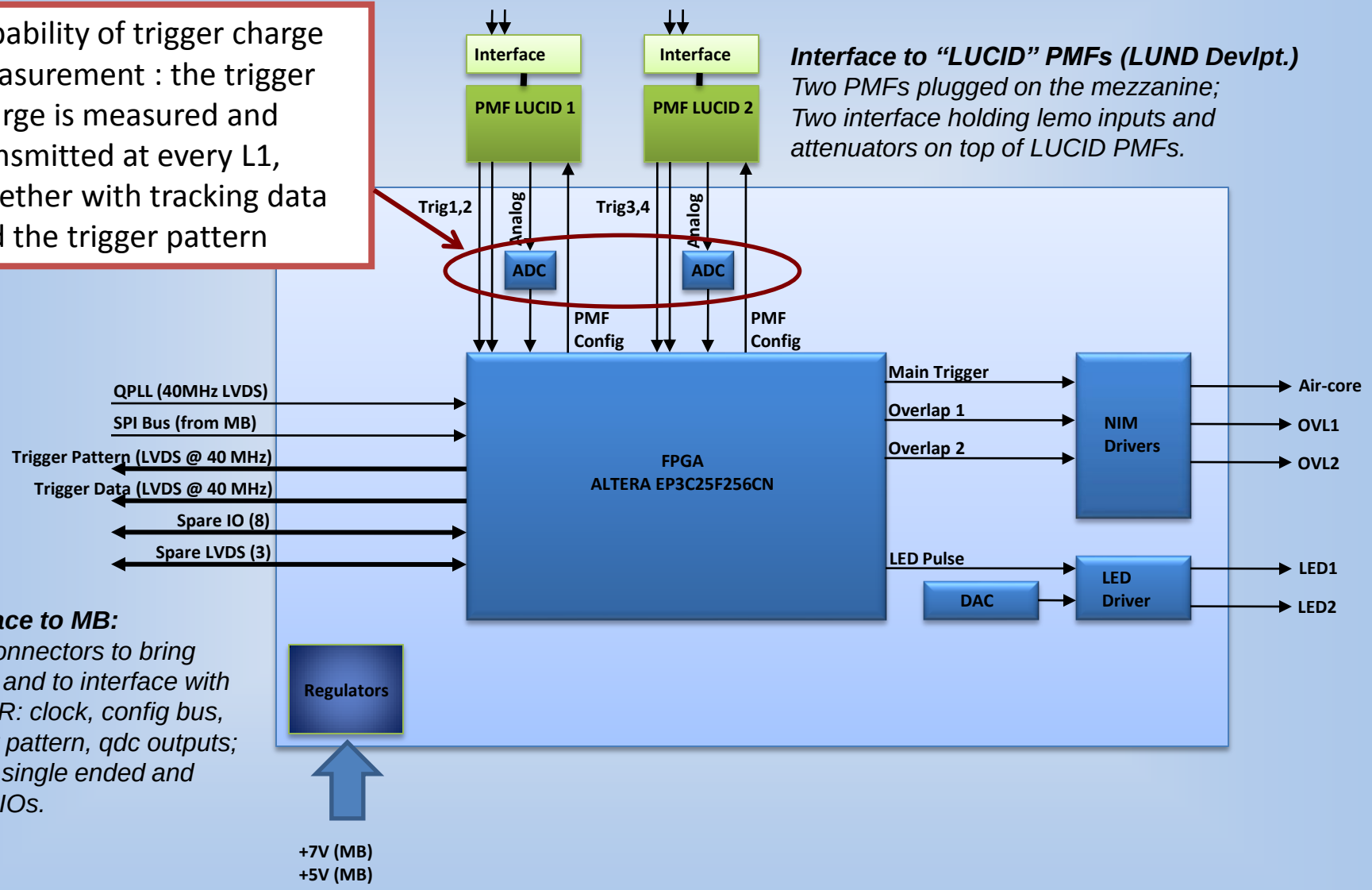

Interface to MB:
Two connectors to bring power and to interface with ALFA-R: clock, config bus, trigger pattern, qdc outputs; Spare single ended and LVDS IOs.

Trigger Mezzanine Details (2)

- The Trigger mezzanine contains the circuits for :
  - LED Pulsers (2 LEDs installed in each pot for light excitation)
  - Trigger Logic (trigger signal can be a combination of the 4 trigger sources)
  - Main Trigger charge measurements
  - Triggers signal processed by the MAROC2 chip, mounted on the LUCID PMF

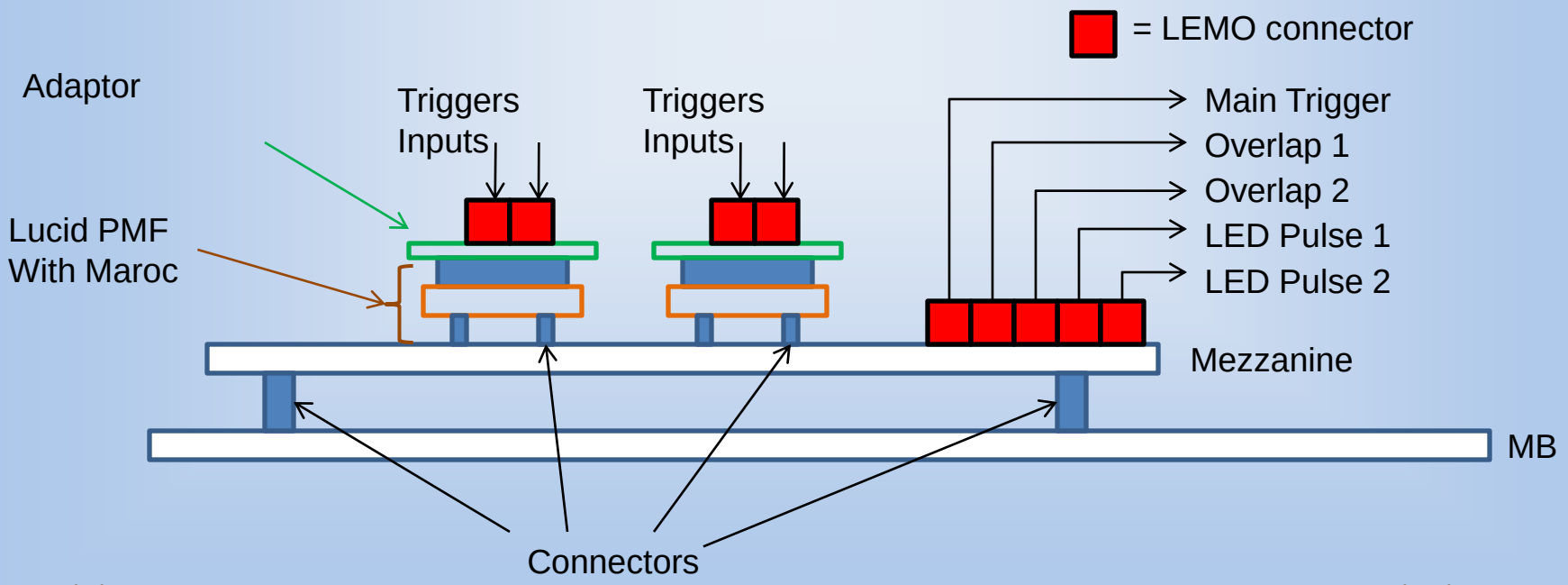

ALFA “Motherboard” implementation

Trigger Mezzanine

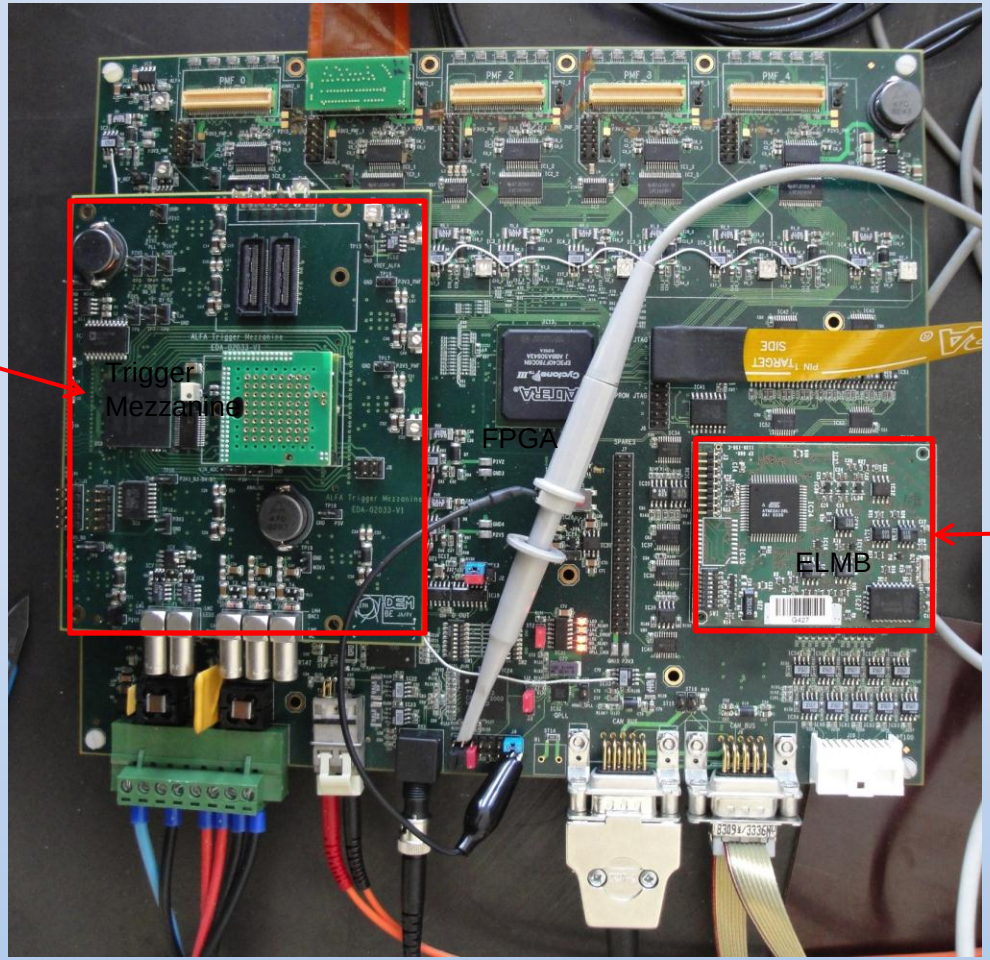

ELMB : control and monitoring

Power Conn. | GOL link | TTC Fiber | ELMB Conn.1 | ELMB Conn.2 | Temp Connector

ALFA Electronics implementation

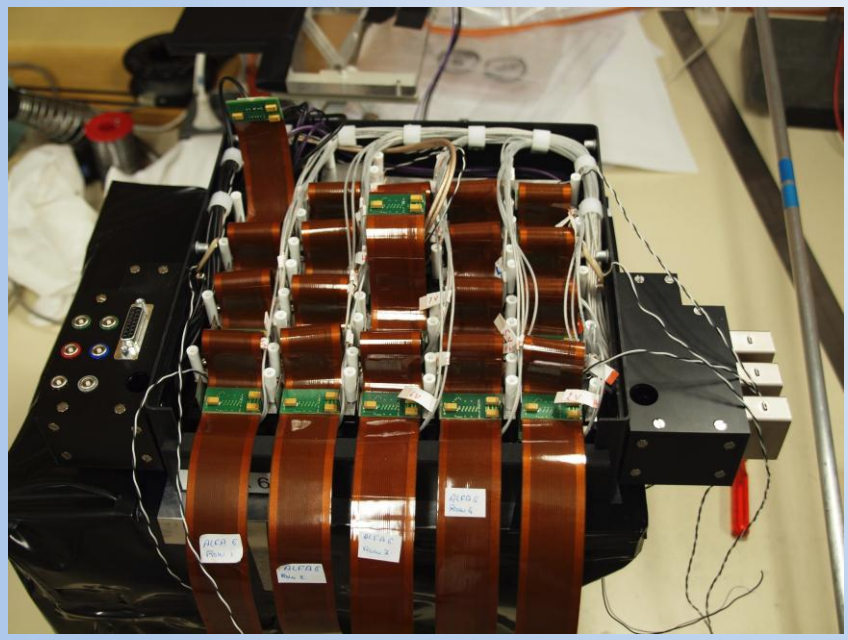

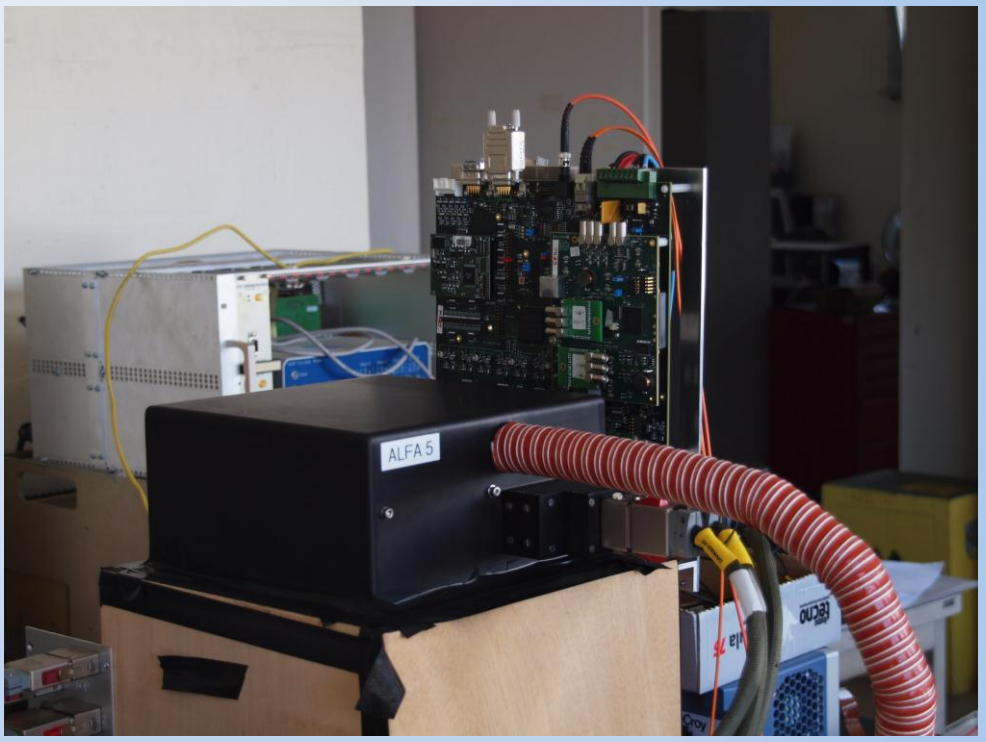

Partial view of the kaptons cabling, PMF are located inside,
HV connectors on the right trigger signals on the left. White wires are the internal HV lines.

PMT, PMF and kaptons are enclosed in a dark box, the motherboard carrying other elements (ELMB, trigger mezzanine) is vertical on the edge

Electronics commissionning

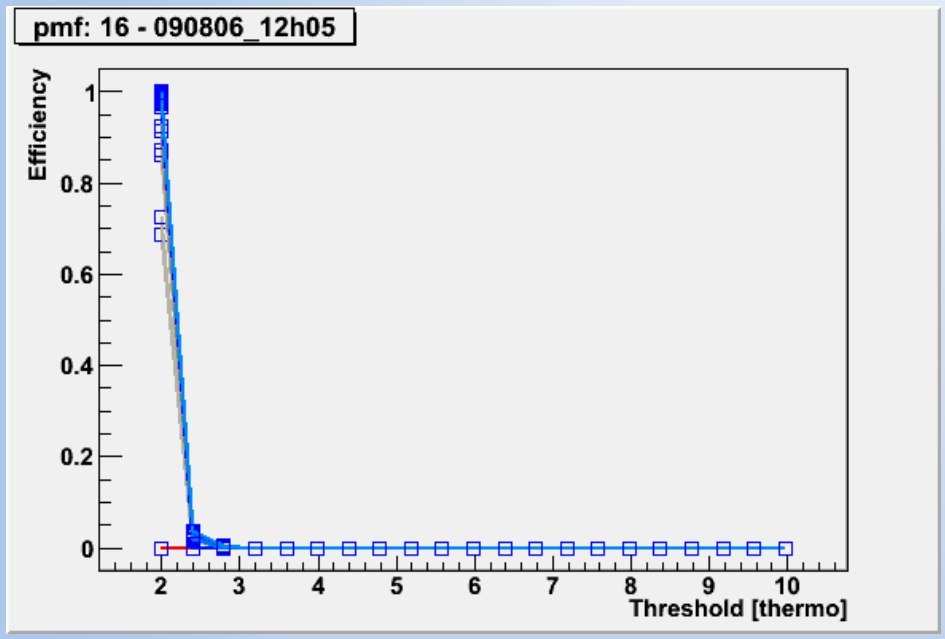

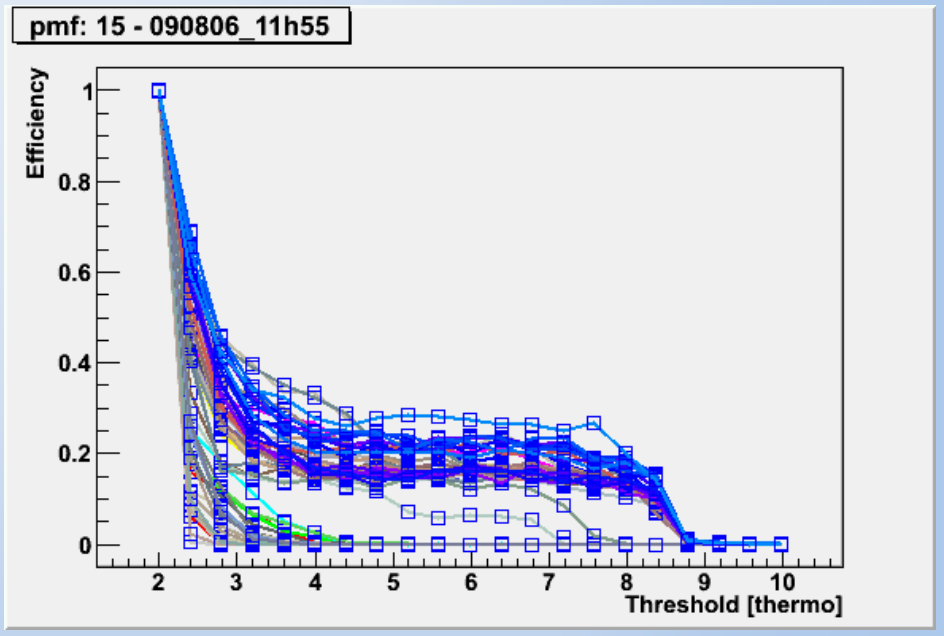

No light HV ON

Light ~1p.e.
HV 950V

Electronics commissioning was performed on the 8 systems just before installation and repeated after installation

Electronics commissioning

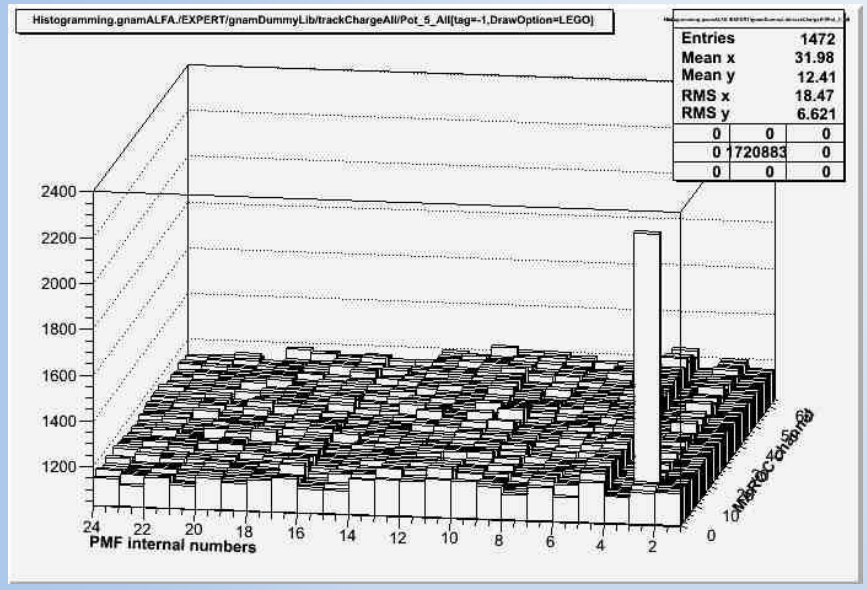

Electrical test stand : one charge signal injected in one channel. The method was used to verify the channel mapping for DAQ reconstruction

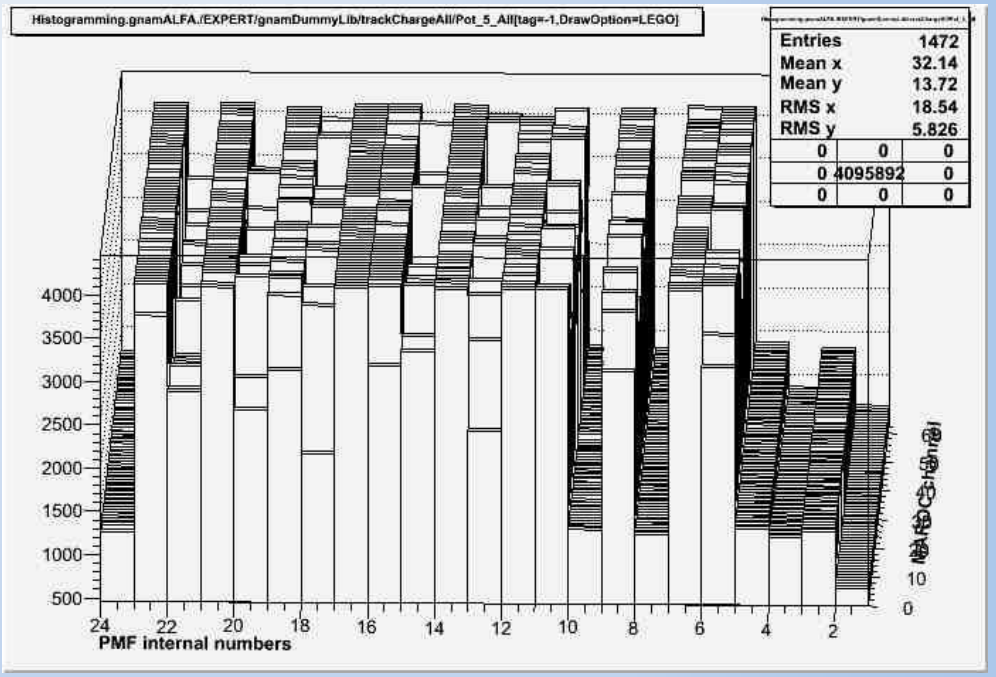

LED test stand : one long distance LED (about 1m and light diffuser) is used to illuminate all channels. In this plot one PMF “row” is not operational, as well as a 3 other PMTs (HV off)

Electronics commissioning

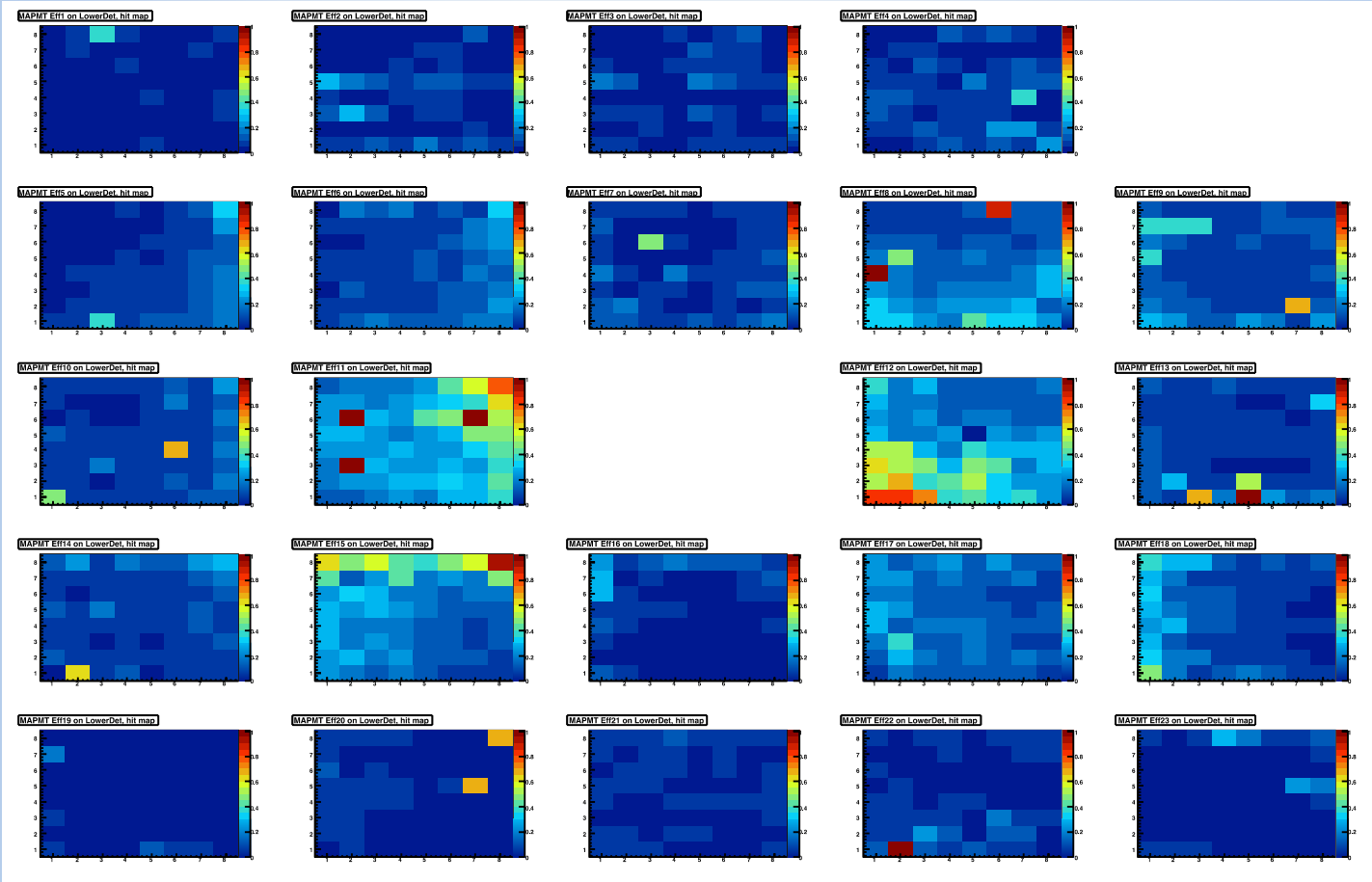

Internal LED pulser : light is passing through leaks in the optical connectors. More light at the center (where the LED is located). Test on one RP system after its installation in the tunnel.

Electronics commissioning

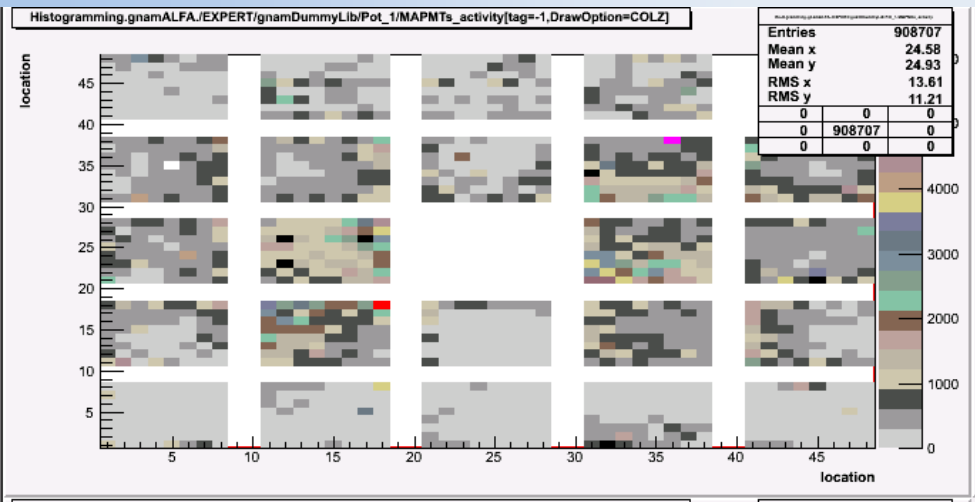

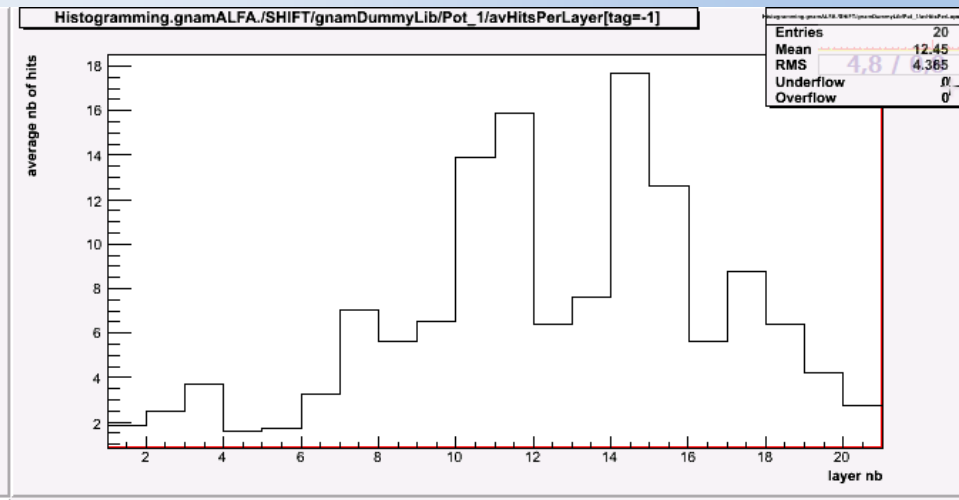

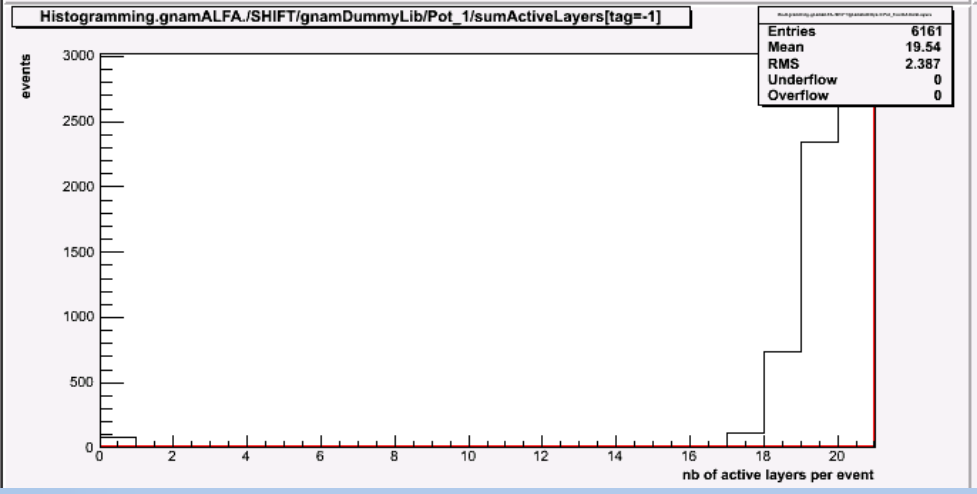

Internal LED pulser : ON LINE MONITORING

Top left figure : on-line hits display

Top right figure : Number of hits per layer

Left : number of layer with hits

Electronics commissioning

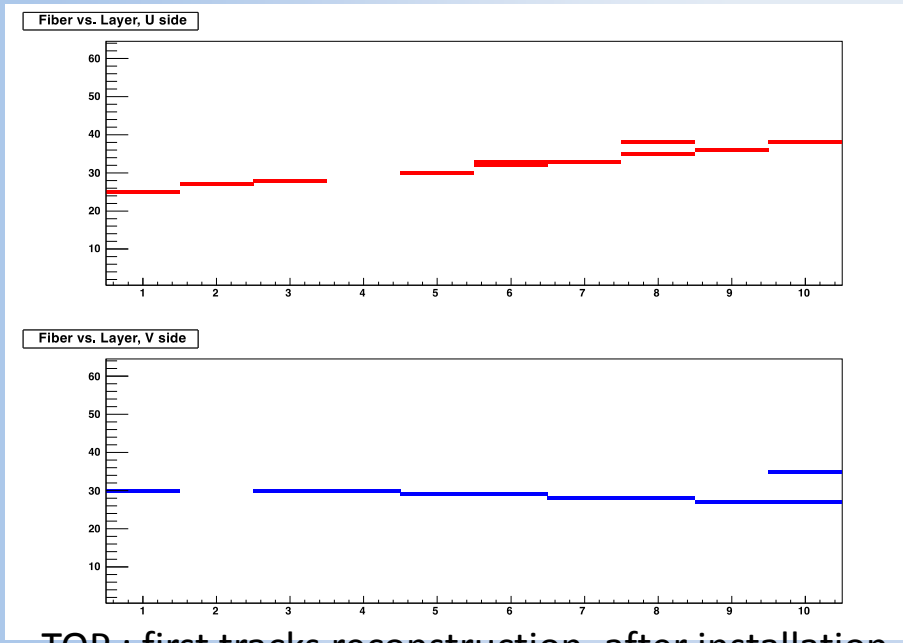

Plots are Courtesy of ALFA soft team

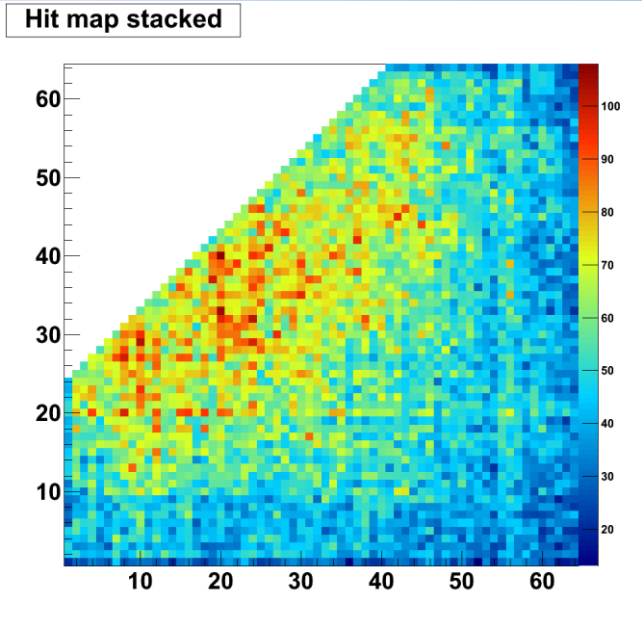

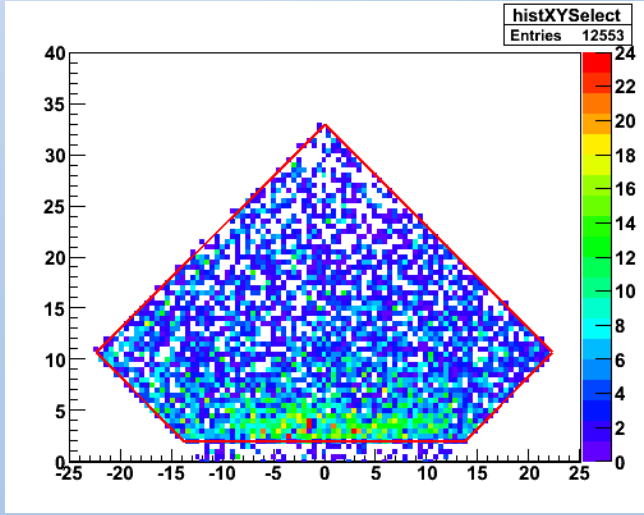

TOP : first tracks reconstruction, after installation. LHC normal run, ALFA in “garage” mode

Top right : Accumulated hits display on one detector (20 layers), LHC normal run, ALFA in garage mode

Bottom right figure : Reconstructed tracks projection. Double hits reconstruction show up reco outside of the detector area

Electronics commissioning

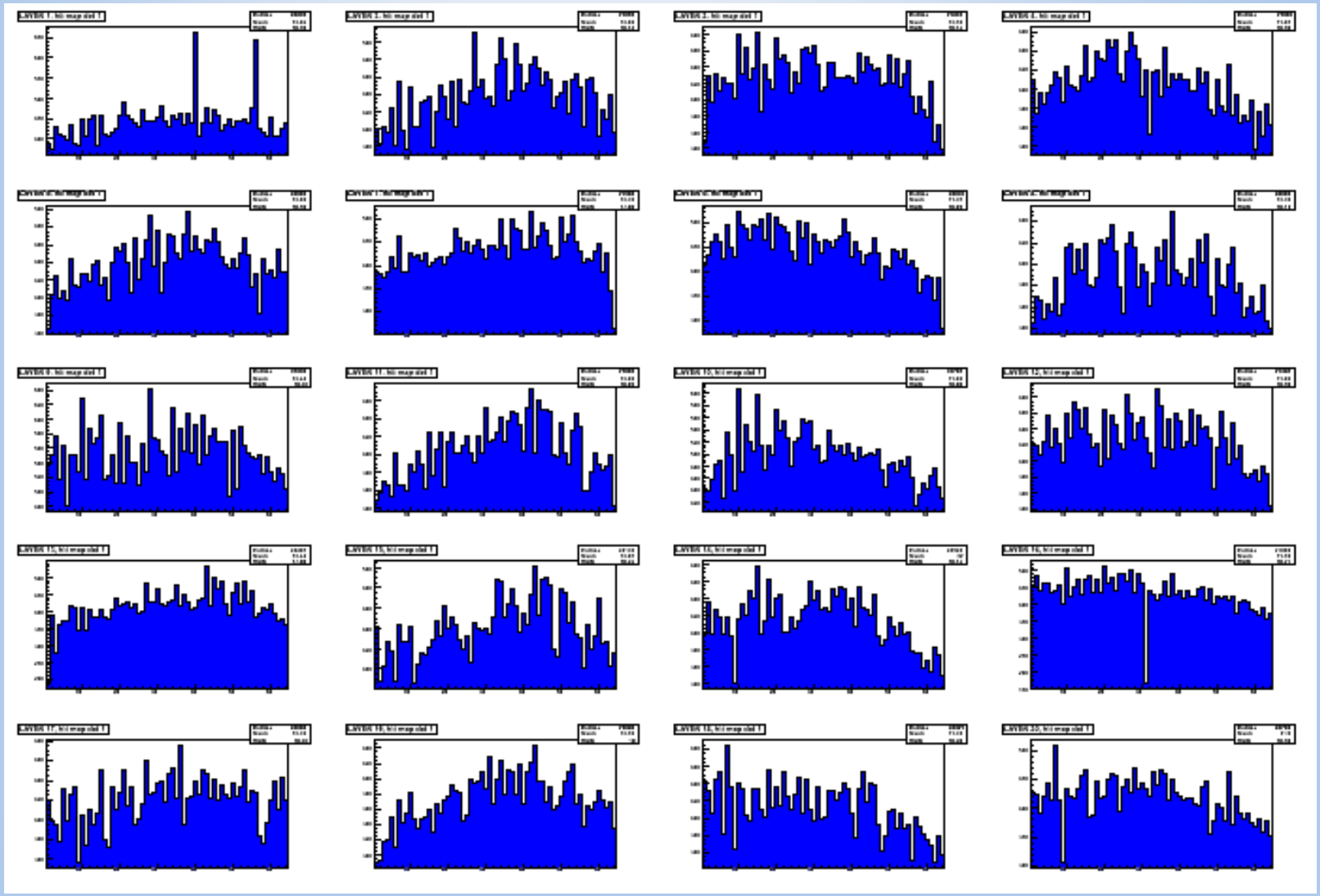

Detector layer hits during LHC runs, 20 layers in one RP, garage position

Electronics commissioning

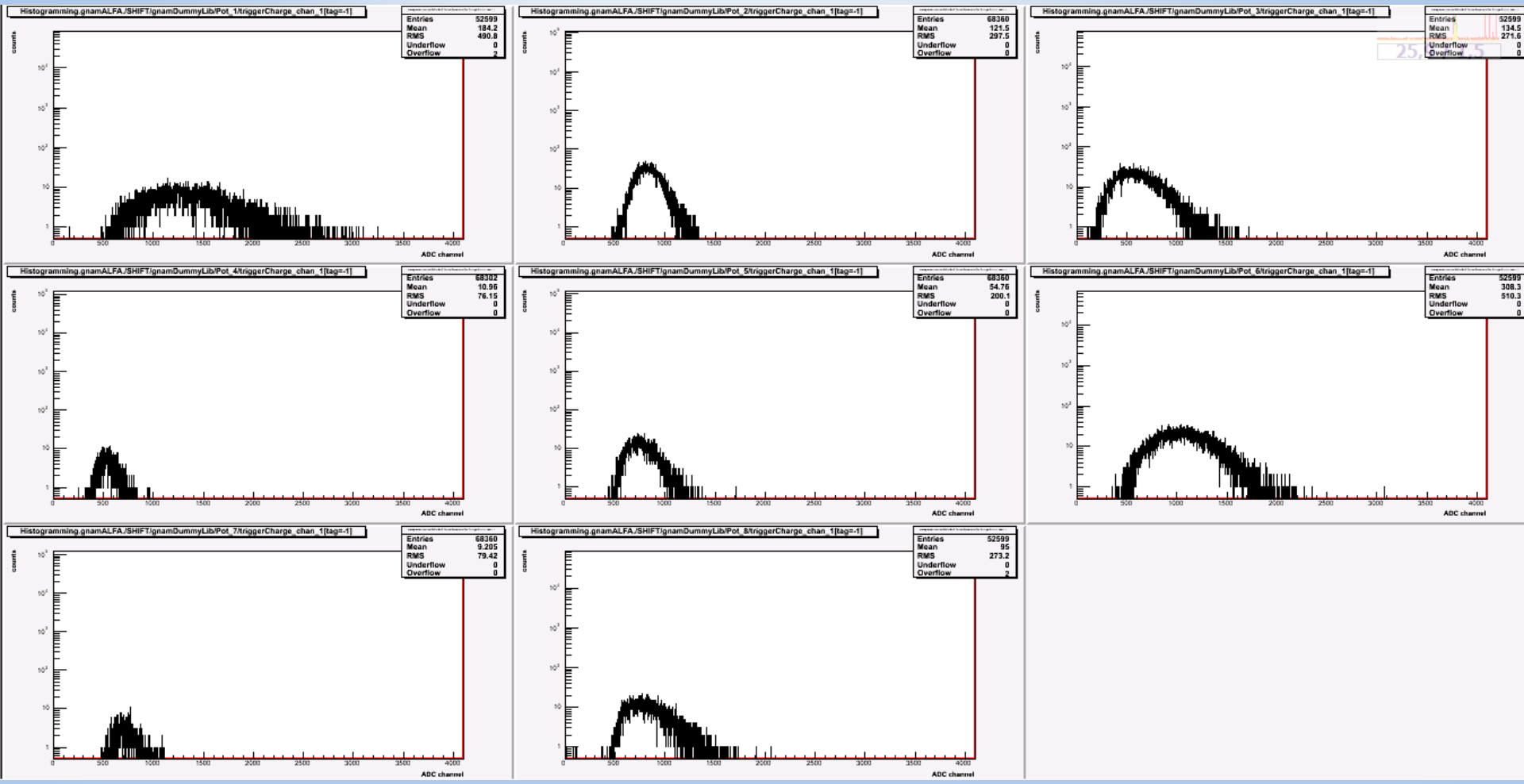

Trigger signals Charge measurements (internal LED) for the 8 pots

Installation in LHC Tunnel

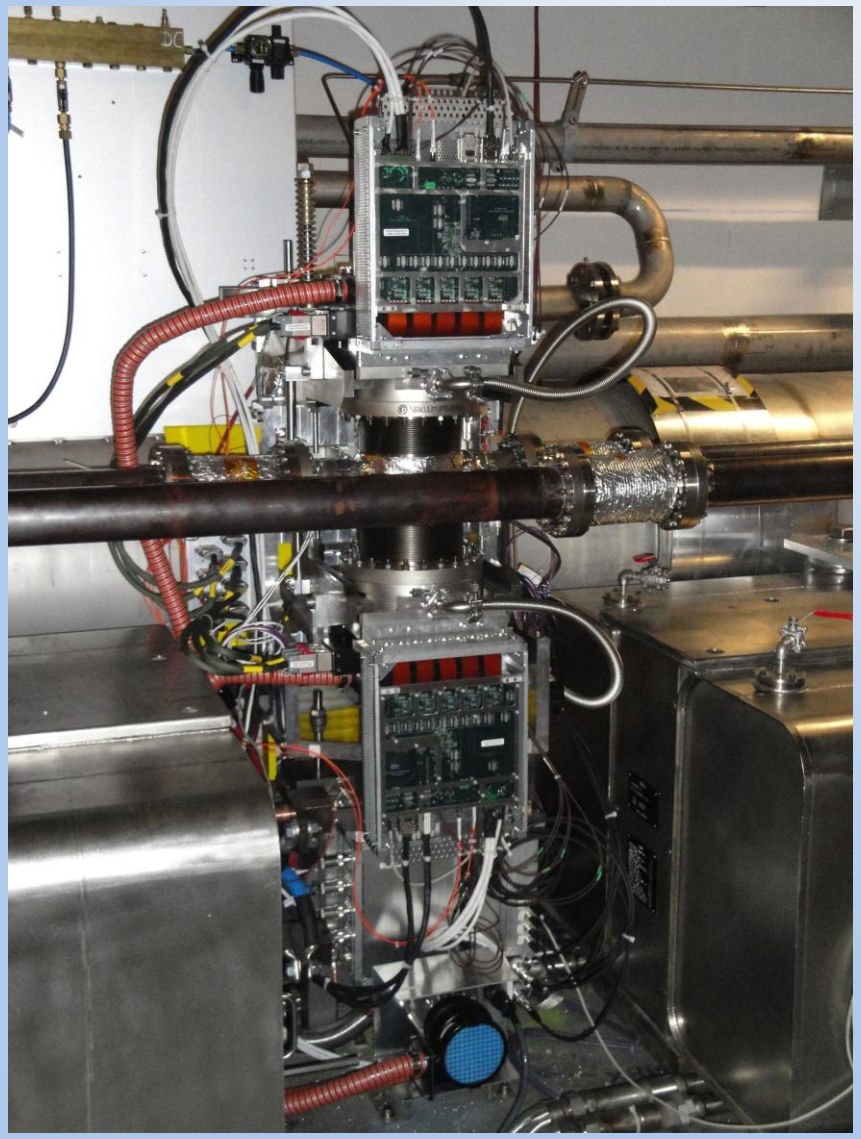

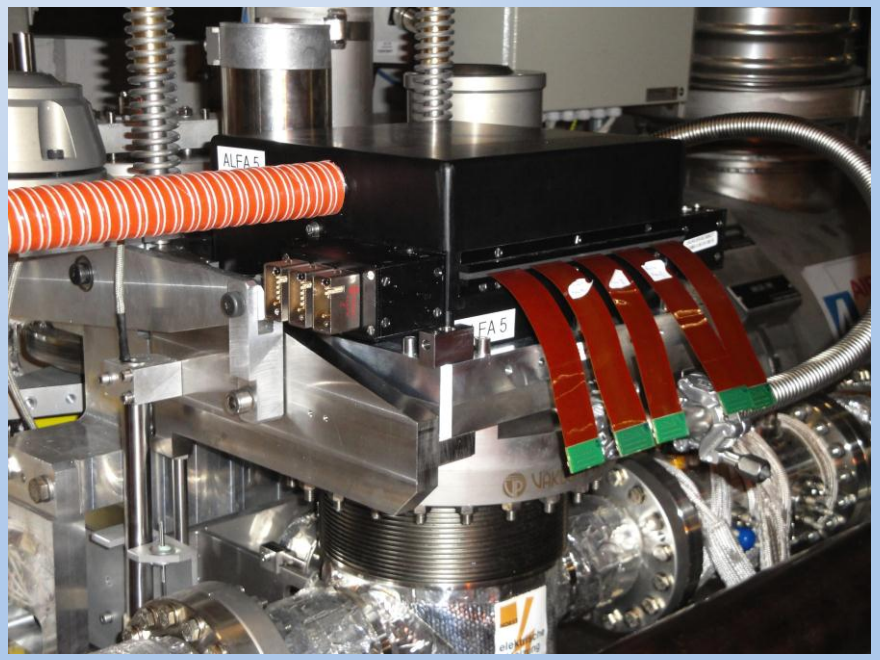

ALFA Electronics

- All 8 pots fully operational right after installation in January 2011
- The track signals charge measurement will be installed during 2011 winter shut down (firmware update)
- Connections to the ATLAS CTP and trigger signals timing adjustment performed after installation (commissioning still going on, insertion to the Level 1 ATLAS trigger system)
- Some specific LHC runs with low beta angle are used to commission the detector for physics (in coordination with TOTEM)

ALFA ELECTRONICS

SPARES

Data readout : modified modes

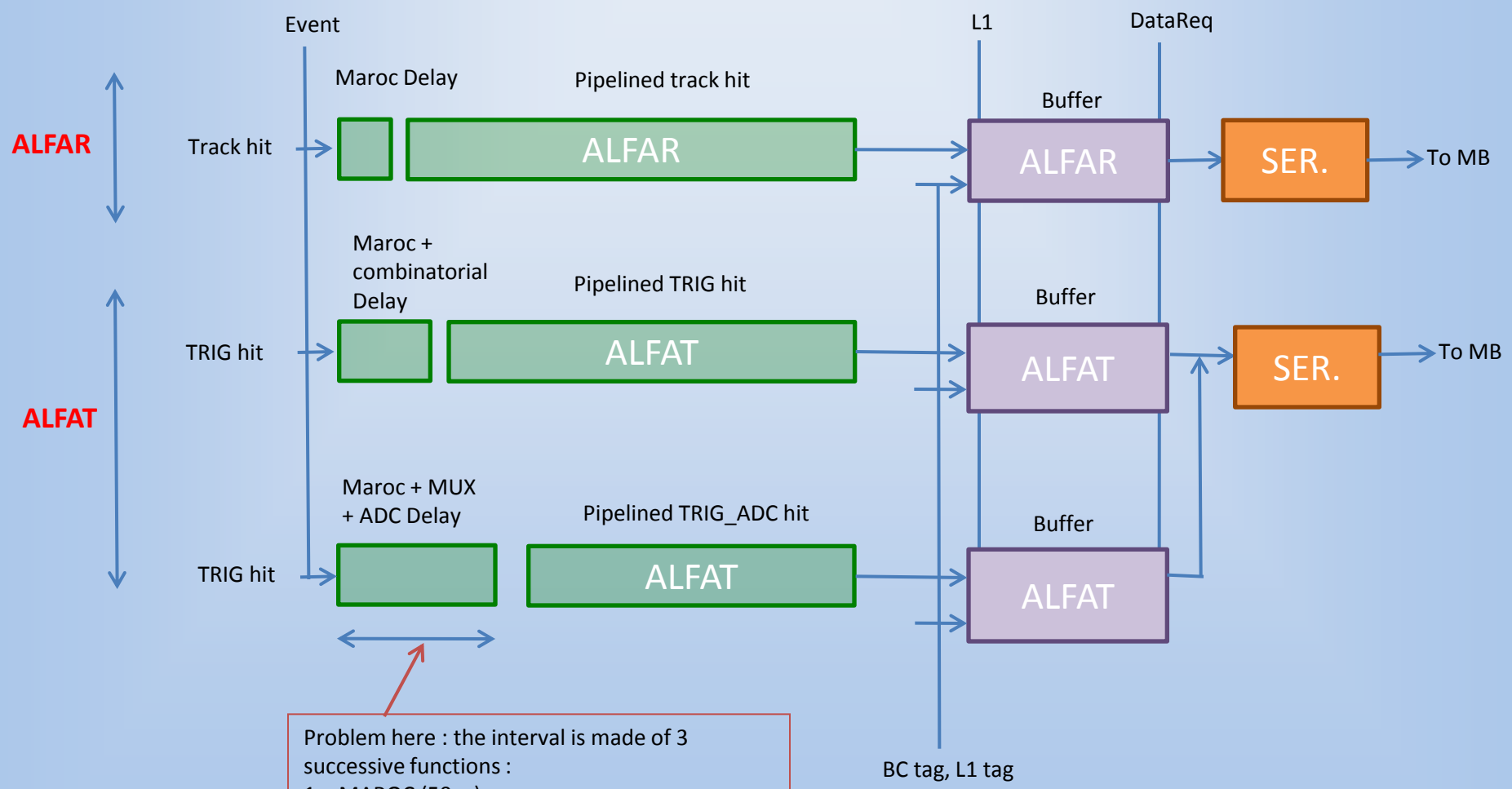

Problem here : the interval is made of 3 successive functions :
1 – MAROC (50ns)
2 – Scan channels (up to 5 = 5us ?)
3 - ADC (500ns)
→ It may exceed the latency time (?)

Warning . TheMUX ADC delay is different for the two QDC channels !

Trigger QDC readout : modified modes

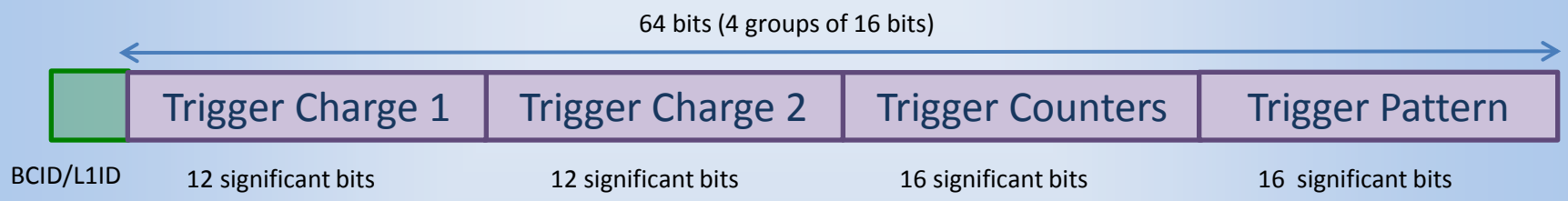

T.Count number of bits :

Hypothesis : for an average count per ms the maximum theoritical count is 40K. 16 bits is 65K. There is no minimum count limit.
A realistic number would be 200 (5Khz hit rate, no background)

Electronics commissionning

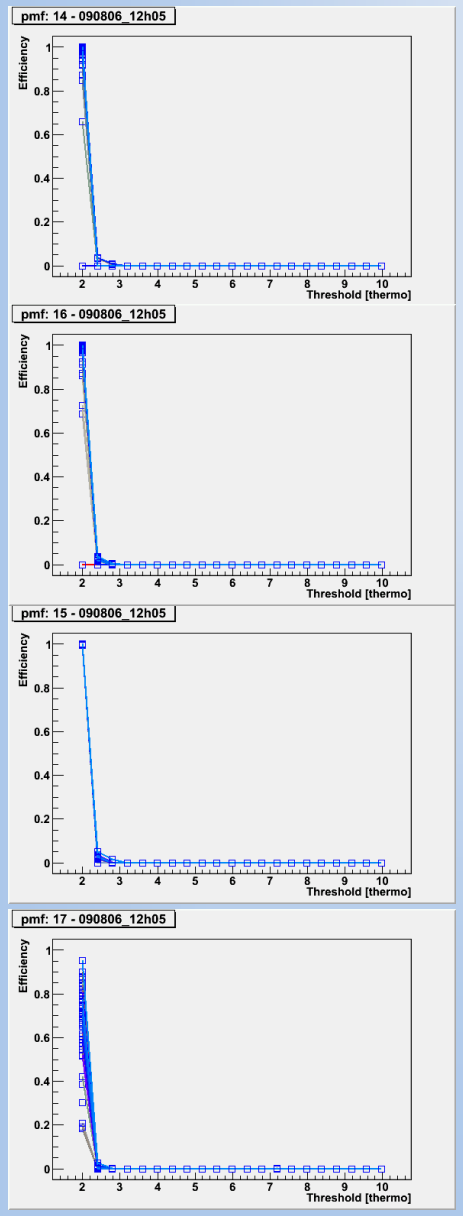

No light
HV ON

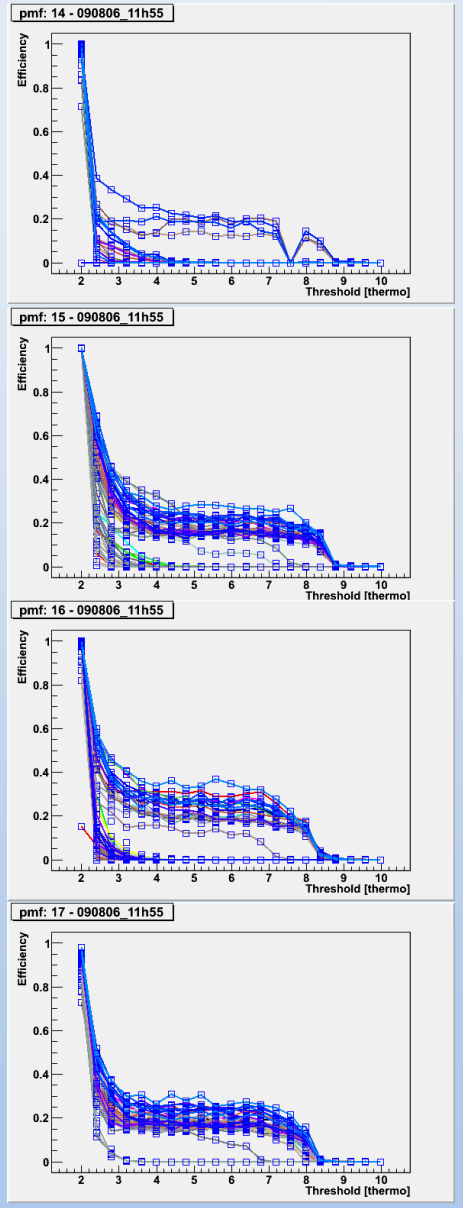

Light
~1p.e.
HV
950V

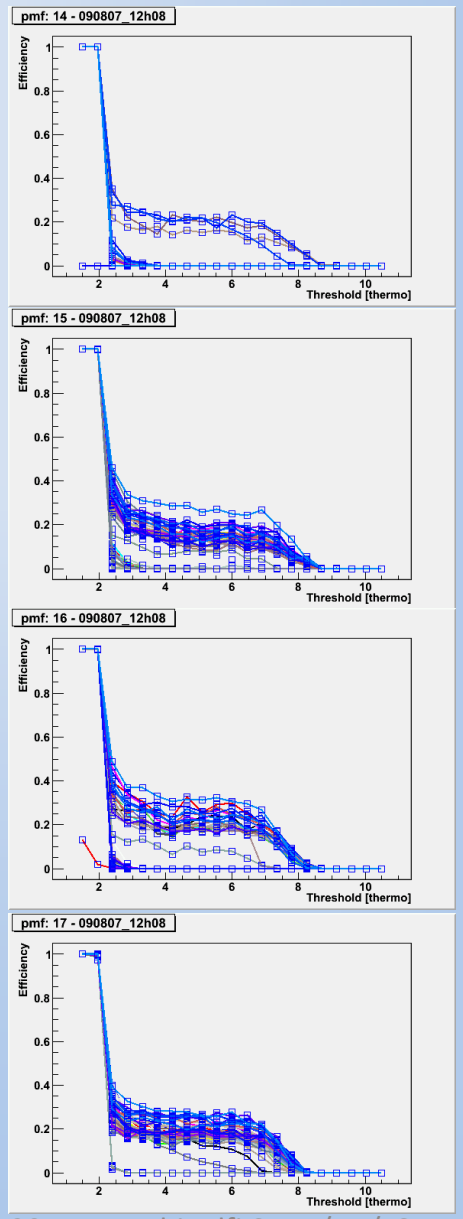

Light
~1p.e.
HV
900V