Study of Geiger-mode APDs performances at cryogenic temperatures

A. Bondar[a,b], A. Buzulutskov[a,b], A. Dolgov[a], E. Shemyakina[a,b], T. Simonov[a] , A. Sokolov[a,b]

[a] Novosibirsk State University, Russia

[b] Budker Institute of Nuclear Physics, Novosibirsk, Russia

CRyogenic Avalanche Detector (CRAD) for dark matter search

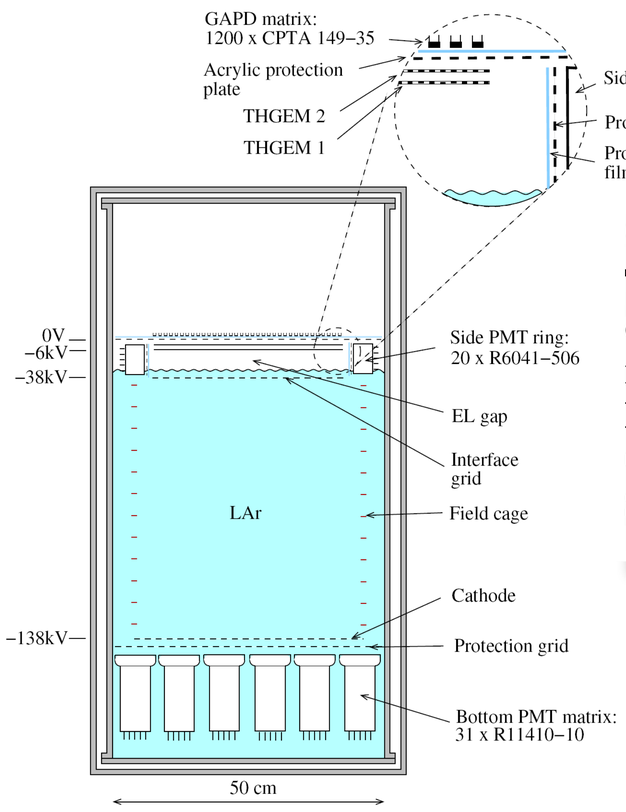

Concept:

Two-phase Ar CRAD with combined THGEM/GAPD-matrix optical readout in the NIR for Dark Matter Search and Coherent Neutrino-Nucleus Scattering experiments [1,2].

- Detector fiducial volume – 50 L;
- Drift field – 2 kV/cm;
- Number of photomultipliers – 51;
- Number of GAPDs – 1200;

1. A. Buzulutskov, JINST 7 (2012) C02025
2. A. Bondar et al., arXiv: 1204:0580, JINST (2012), in press

Infrared scintillations in the noble gases

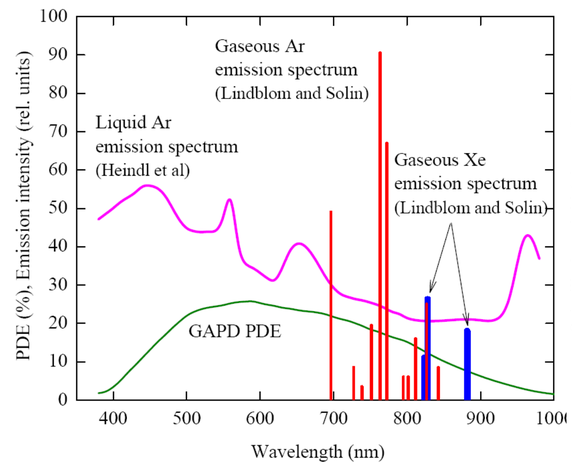

Scintillation emission spectra in the visible and NIR region in gaseous Ar and Xe and in liquid Ar. The Photon Detection Efficiency (PDE) of the GAPD "CPTA 149-35" is also shown [1,2].

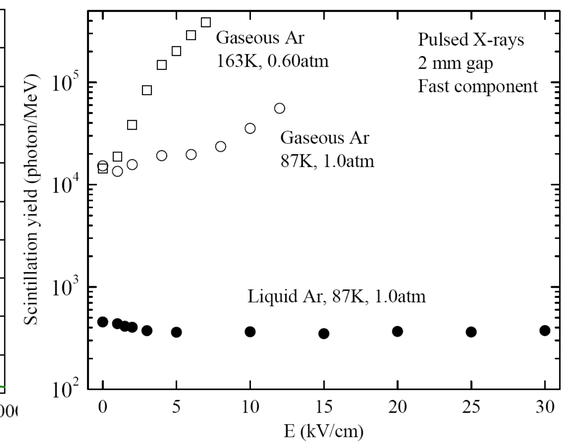

Primary NIR scintillation yield :
- In gaseous Ar it amounted to 17000 photon/MeV in 690–1000 nm
- In liquid Ar it amounted to 510 photon/MeV in 400–1000 nm
-In GAr: secondary scintillations (electroluminescence) in the NIR were observed

Experimental setup

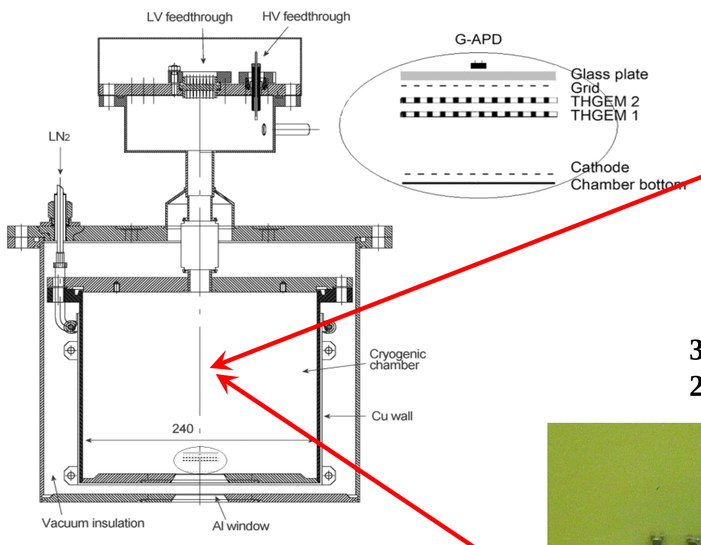

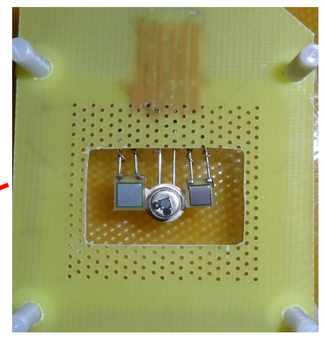

3 GAPD assembly: 3x3 and 2.1x2.1 mm², 1 mm round.

- 9 liters cryogenic chamber with X-ray windows
- ~1 liter of liquid Ar or Xe
- THGEM or THGEM/GAPD assembly inside

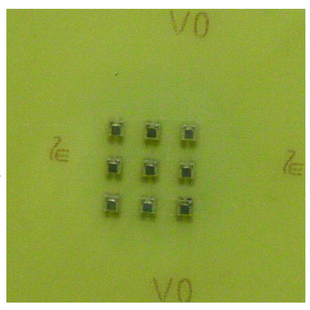

9 GAPD assembly: 2.1x2.1 mm².

GAPD performance cryogenic temperatures

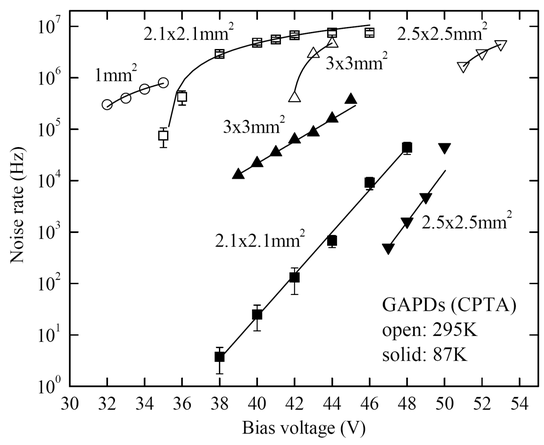

GAPDs noise rates at 87K and 295K

GAPD types studied:

1.143-32: 0.95 mm2
2.149-35: 2.1x2.1 mm2
3.150-50: 2.5X2.5 mm2
4.140-40: 3x3 mm2

All GAPDs are manufactured by CPTA company, Moscow

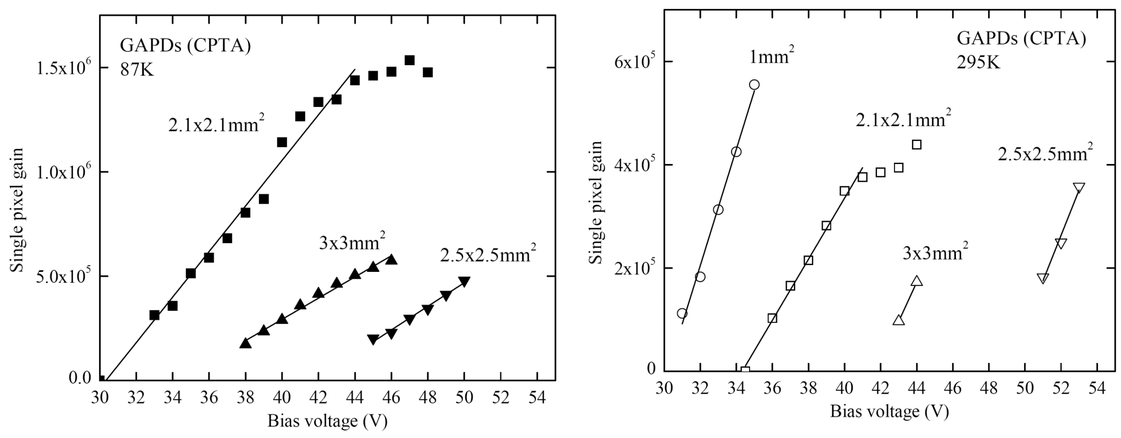

GAPDs gains at 87K and 295K

Preliminary results with double-THGEM/GAPD-matrix readout

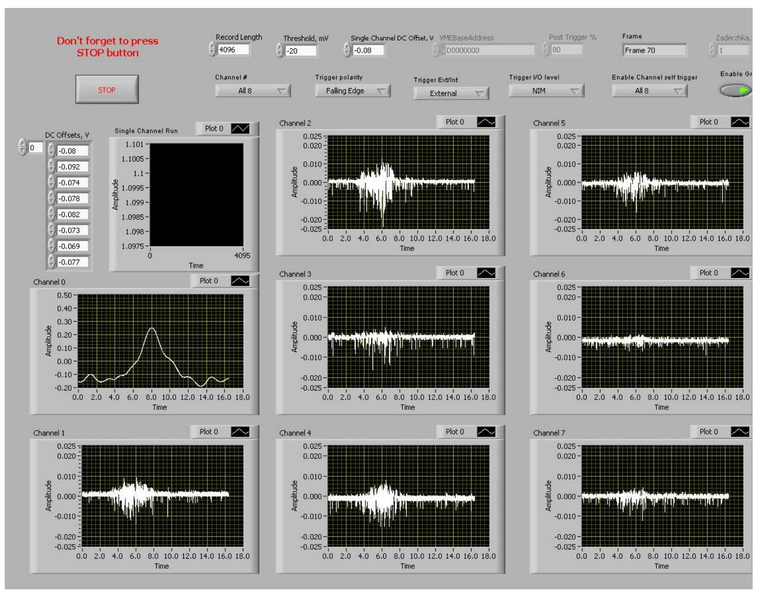

Signals from THGEM/GAPDs-matrix multiplier induced by pulsed X-rays in Ar at 295K

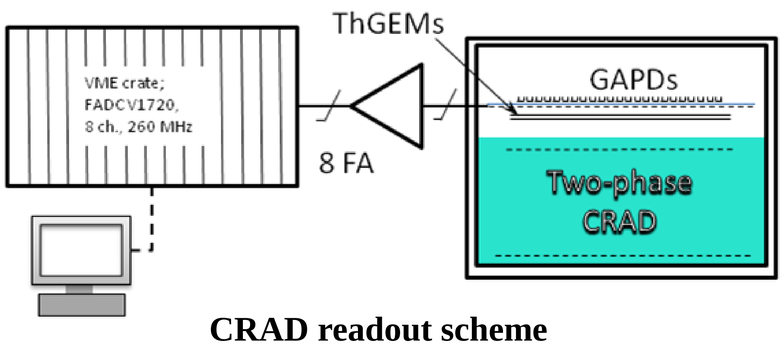

CRAD readout scheme

Conclusions

1. GAPD "CPTA 149-35" has superior performance at 87 K in terms of the maximum gain and minimum noise rate.
2. THGEM/GAPD-matrix optical readout in Ar in the NIR has been demonstrated

This work supported by the Grant of the Government of Russian Federation (11.G34.31.0047).