Transmission-Line Readout with Good Time and Space Resolution for Large-Area MCP-PMTs

Fukun Tang (UChicago)

C. Ertley, H. Frisch, J-F. Genat, Tyler Natoli (UChicago)
J. Anderson, K. Byrum, G. Drake, E. May (ANL)
Greg Sellberg (FNAL)

- Introduction
- Characteristics of MCP-PMT output signals
- Readout techniques for picoseconds timing measurements
- Transmission-line readout design and simulations
- 40Gsps fast sampling chip design
- Summary & plan

TWEPP 2008, Naxos, Greece, September 15-19 2008

Introduction: Applications of Time-of-Flight for HEP

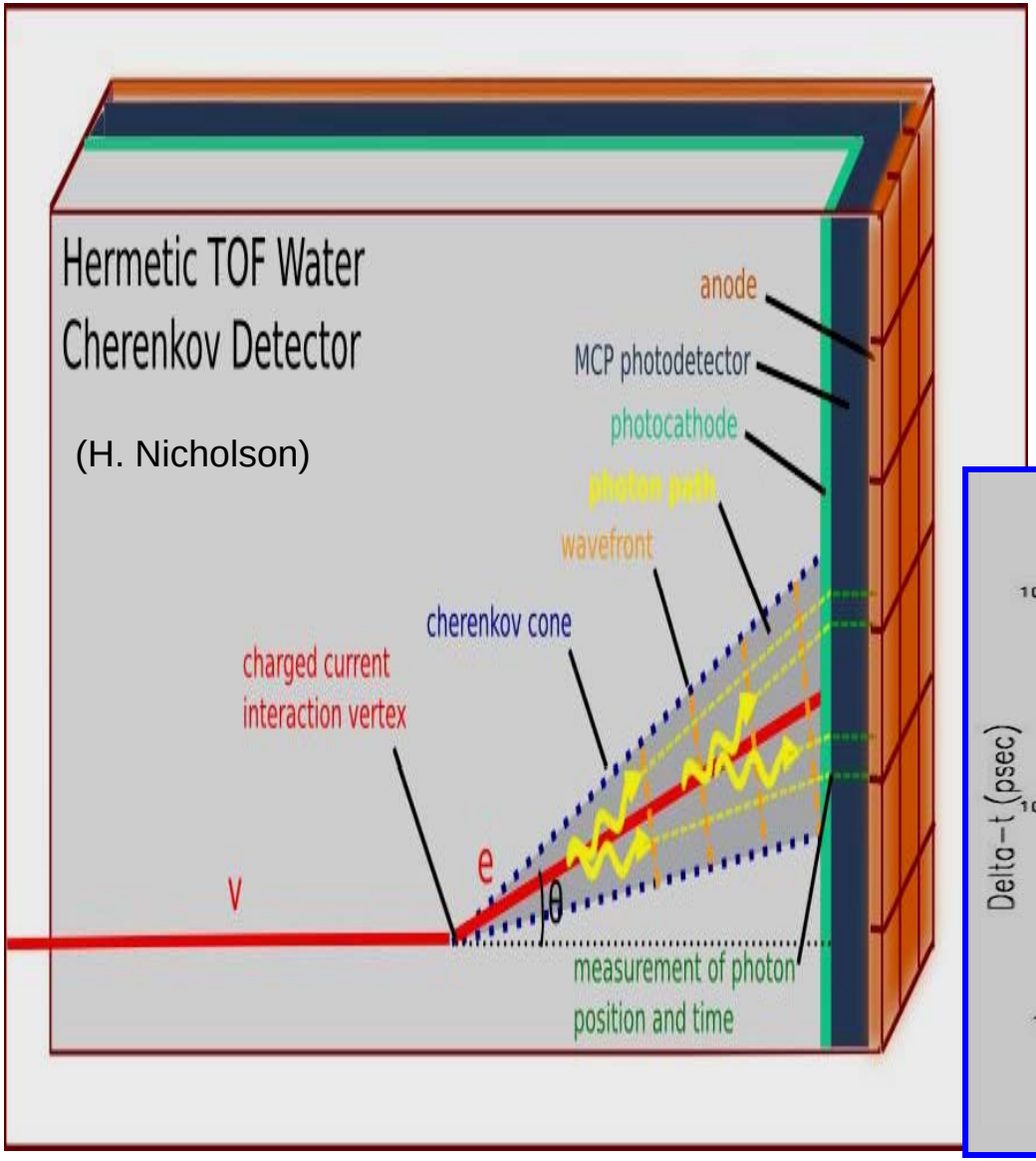

Courtesy of H.

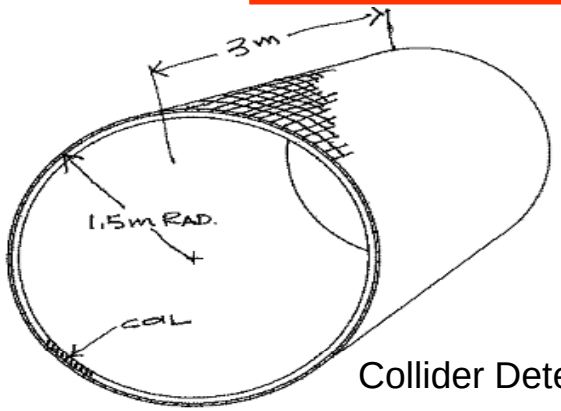

Collider Detector

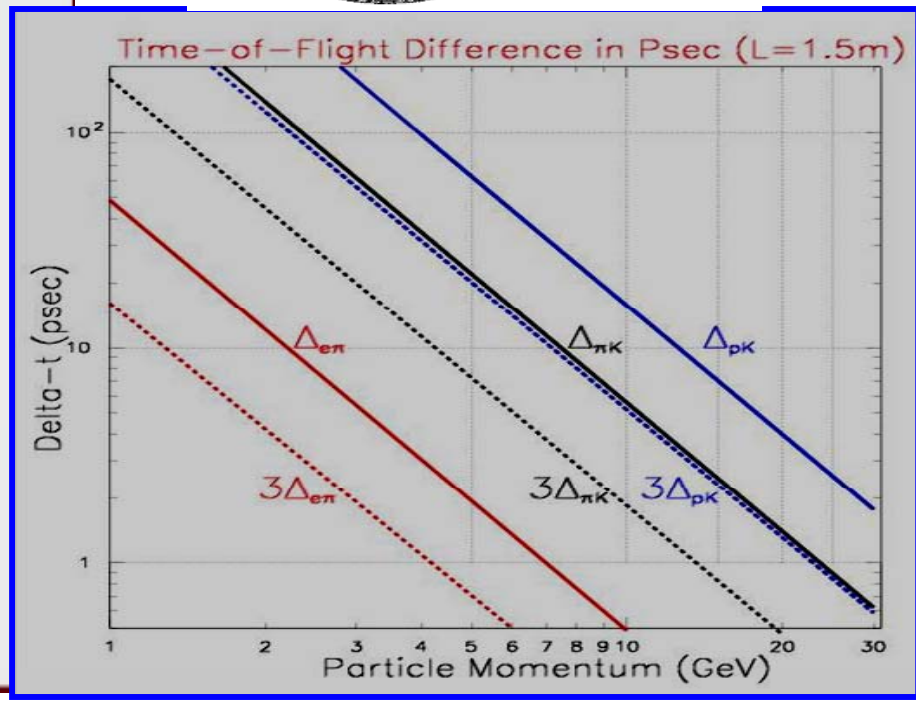

Introduction: Planacon MCP-PMT Tube & Anode Array

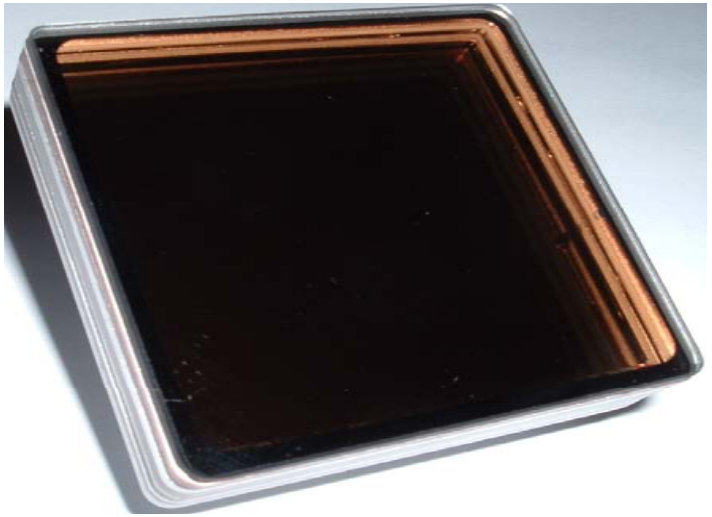

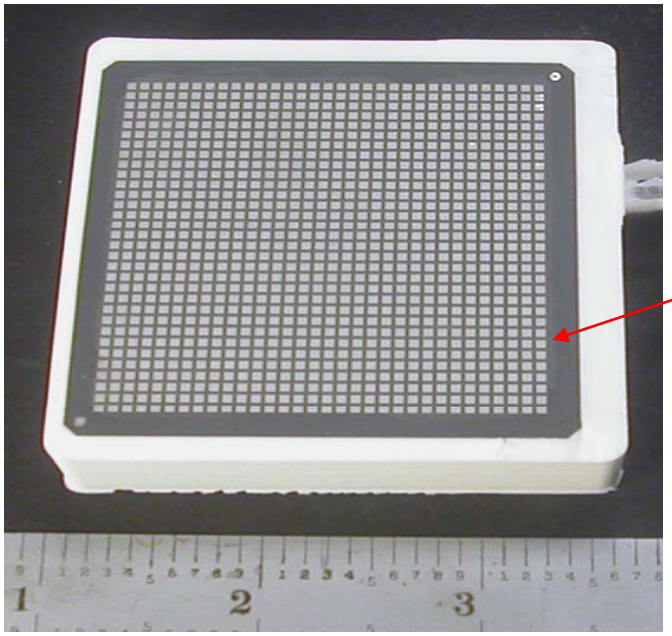

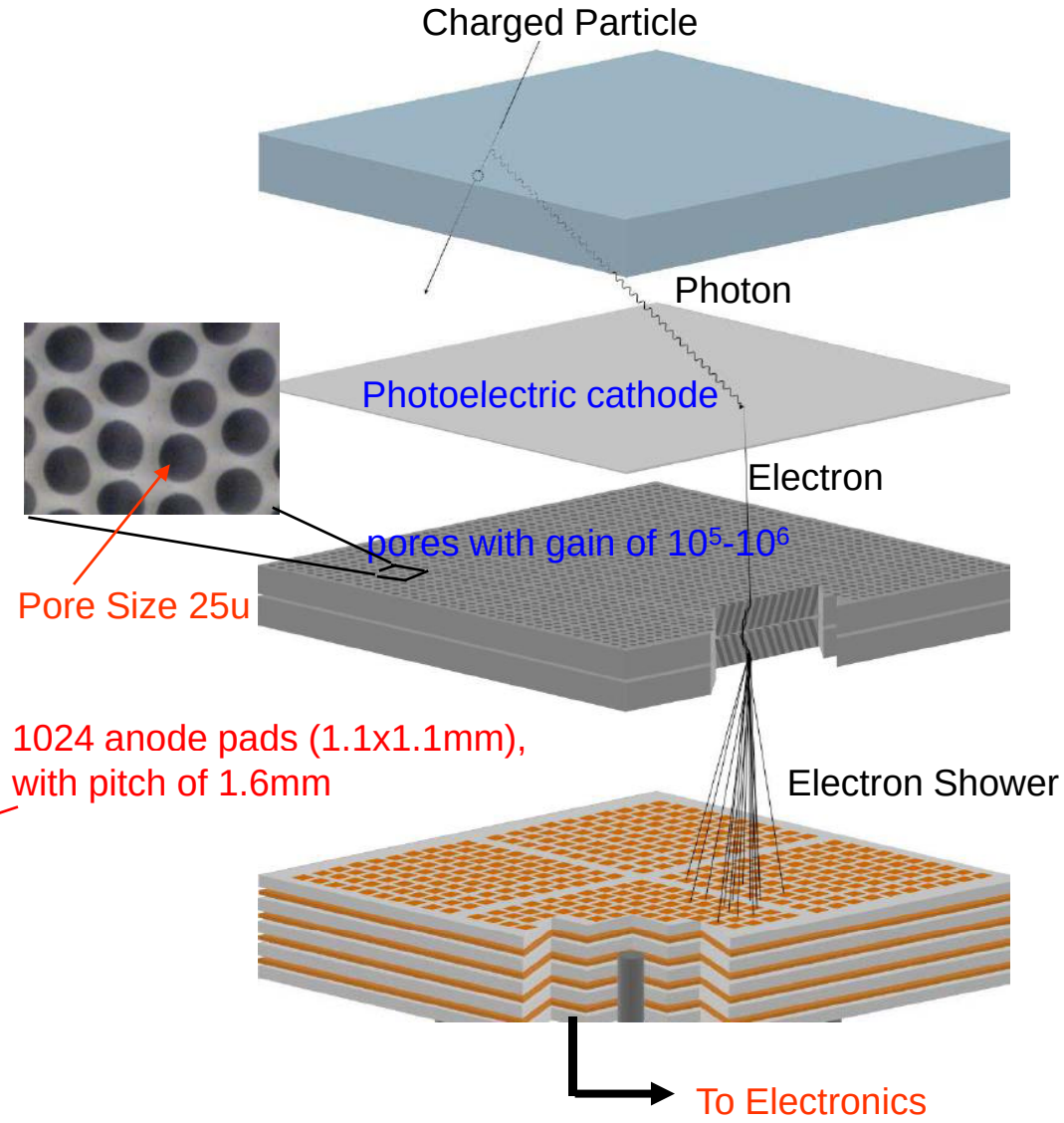

MCP signals

Courtesy of J-F.

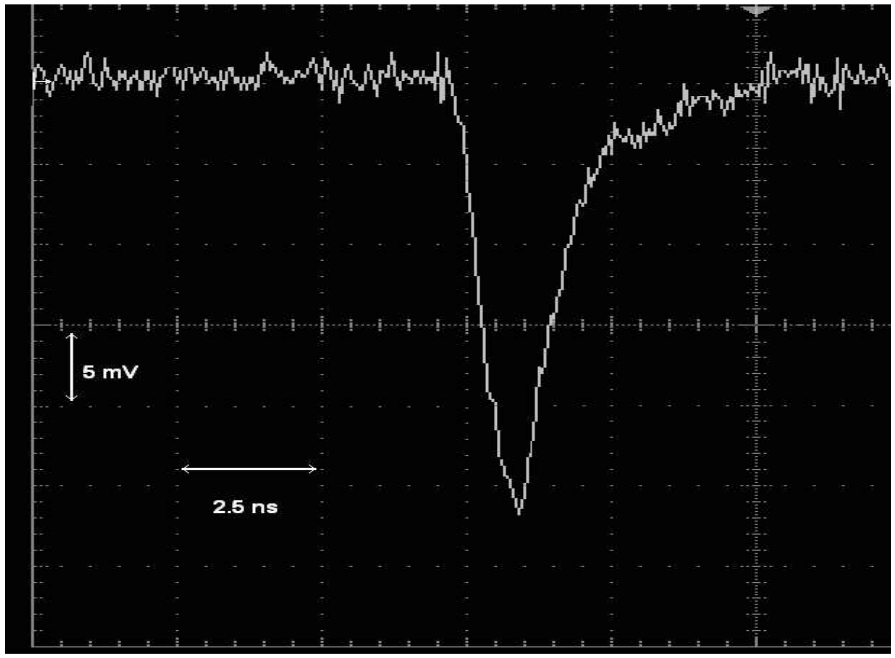

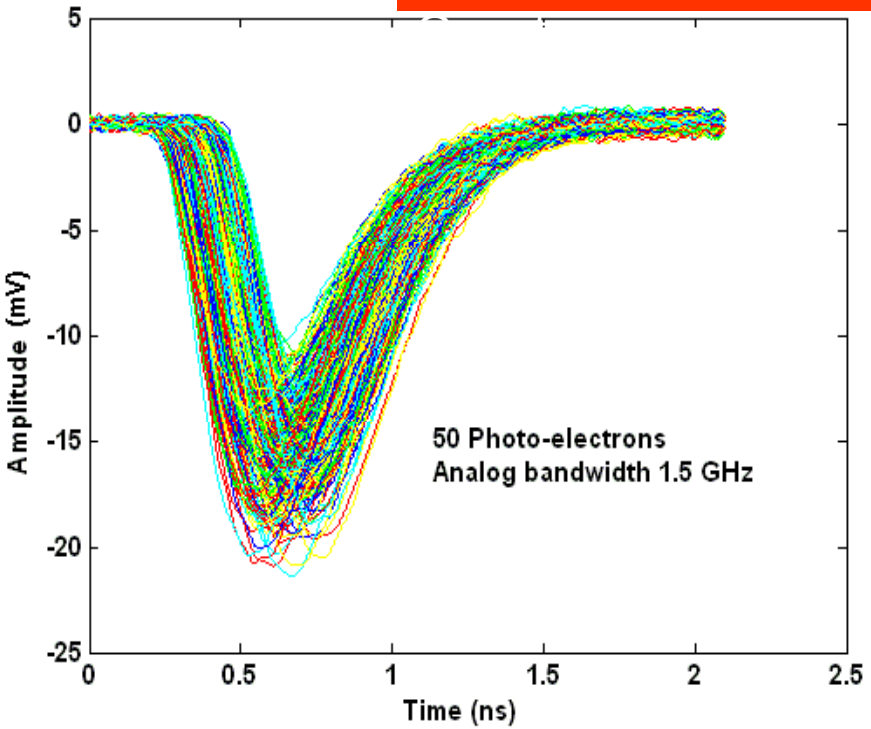

- **Measured (beam-tests) :**
- **Rise-time: 380ps**

→bw=1.75GHz

- **25mm pores**

Simulation:

- Rise time 200ps (6mm pores)

- Time spread: +/- 125ps, random

- Amplitude spread: 14%, normal

MCP signals (beam-test)

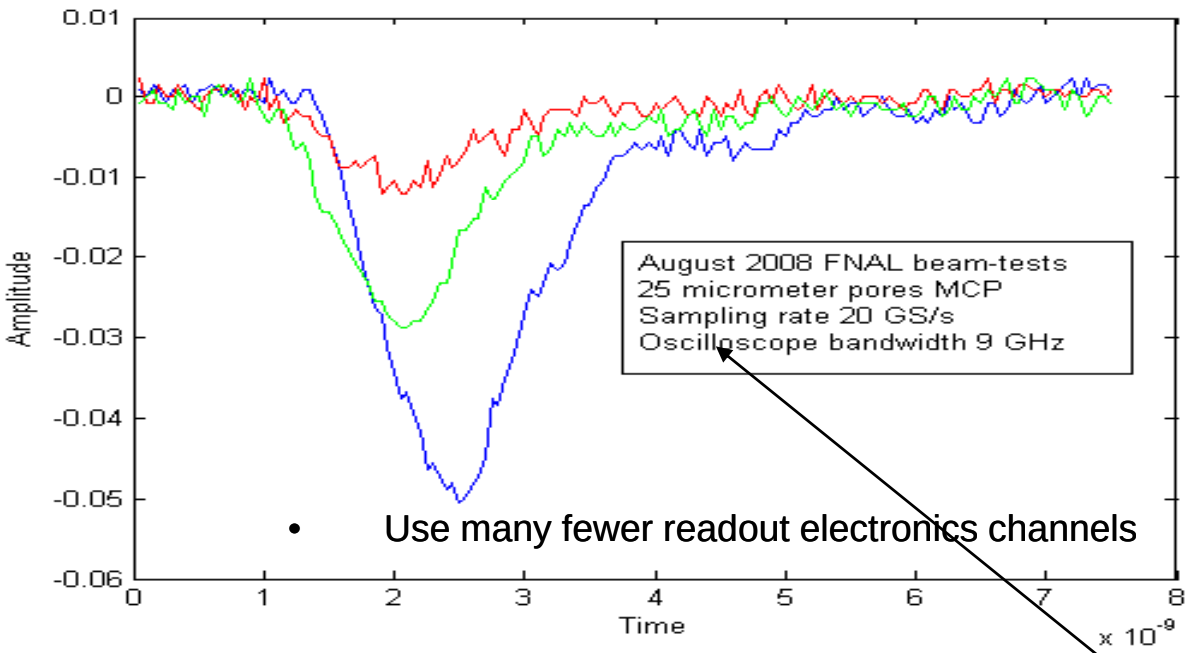

- Use many fewer readout electronics channels

As measured at Fermilab (beam-test, 10-50 PEs)

25 mm pores
Two stages MCP
Gain ~10^6

I (1PE) = dQ/dt ~ 1.6×10^{-19} x 5×10^5 / 250 ps = 320 uA
Expect: 16 mV @ 50 Ω

Fast Timing Electronics

Current techniques:

- Leading edge + TDC/ADC
- Constant fraction + TDC/ADC
- Zero-crossing + TDC
- Double / multiple thresholds + TDC/ADC

- ***Pulse sampling and reconstruction***

The most favorable method is **sampling**, particularly in the case of few Photo-electrons.

Samples as effective for timing as steep signal slope and large signal/noise ratio

Use today existing sampling chips in first step:
Hawaii, PSI, Saclay/Orsay (sampling rate @2-5 GHz, 10-13 bits)

- **Derive accurate time and charge using digital signal processing**
- **Resolve pile-up, transmission line readout ambiguities**

Fast timing simulations

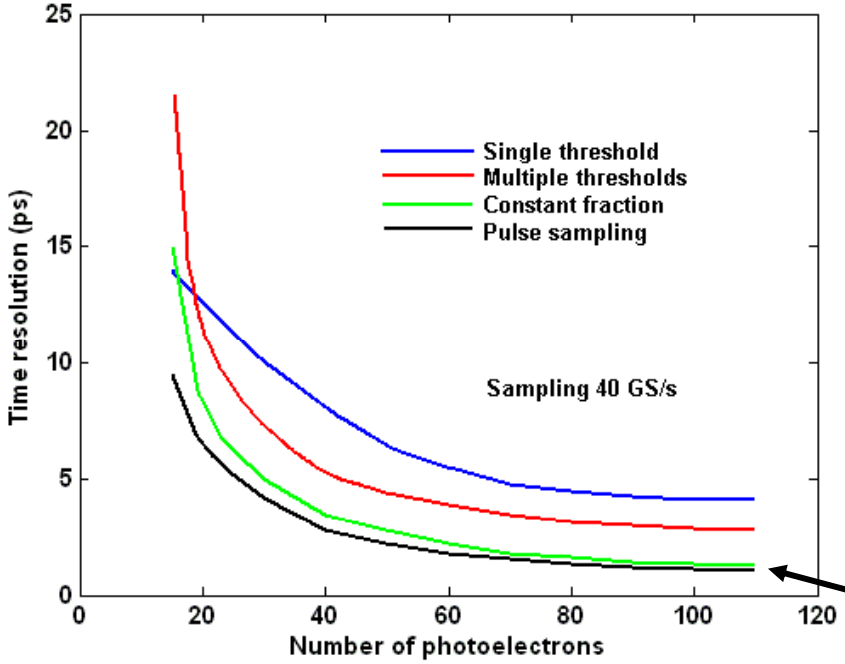

Monte-Carlo simulations

MCP signals
- 200ps rise time
- 400ps fall time
- 10-100 Photo-electrons
- MCP noise 50%
- White noise 50%
- S/N 10-100

Fast Sampling simulation
- Sampling frequency 40 Gsps

Pulse sampling

Assume 1.5 GHz analog bandwidth:
100 samples taken at 10-40 Gsps allow reconstructing time to a few picoseconds and charge to one per cent.

- Better time resolution compared to CFD particularly at low PEs,
- Records the full pulse information

Proposed Transmission –line and Fast Sampling Readout for Planacon MCP-PMT

Why use transmission-line readout?

Advantages of transmission-line and fast sampling techniques:

- Use many fewer readout channels (1024 down to 64 channels)
- Readout timing, position and energy information
- Good transmission-line bandwidth (up to 3.5GHz)

Principle of Transmission-line Anode Readout

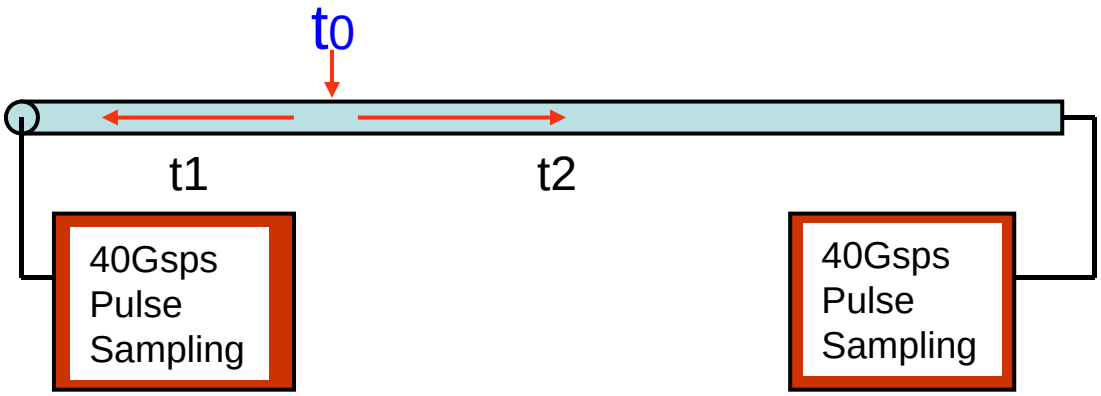

Timing:
(Sampling over the peak)

$$t_0 = \frac{t_1 + t_2}{2}$$

Position:

$$x_i = \frac{t_1 - t_2}{t_1 + t_2}$$

Energy:
(Full waveform sampling)

$$E_i = q_1 + q_2$$

Proposed Transmission-line Anode Board (top view)

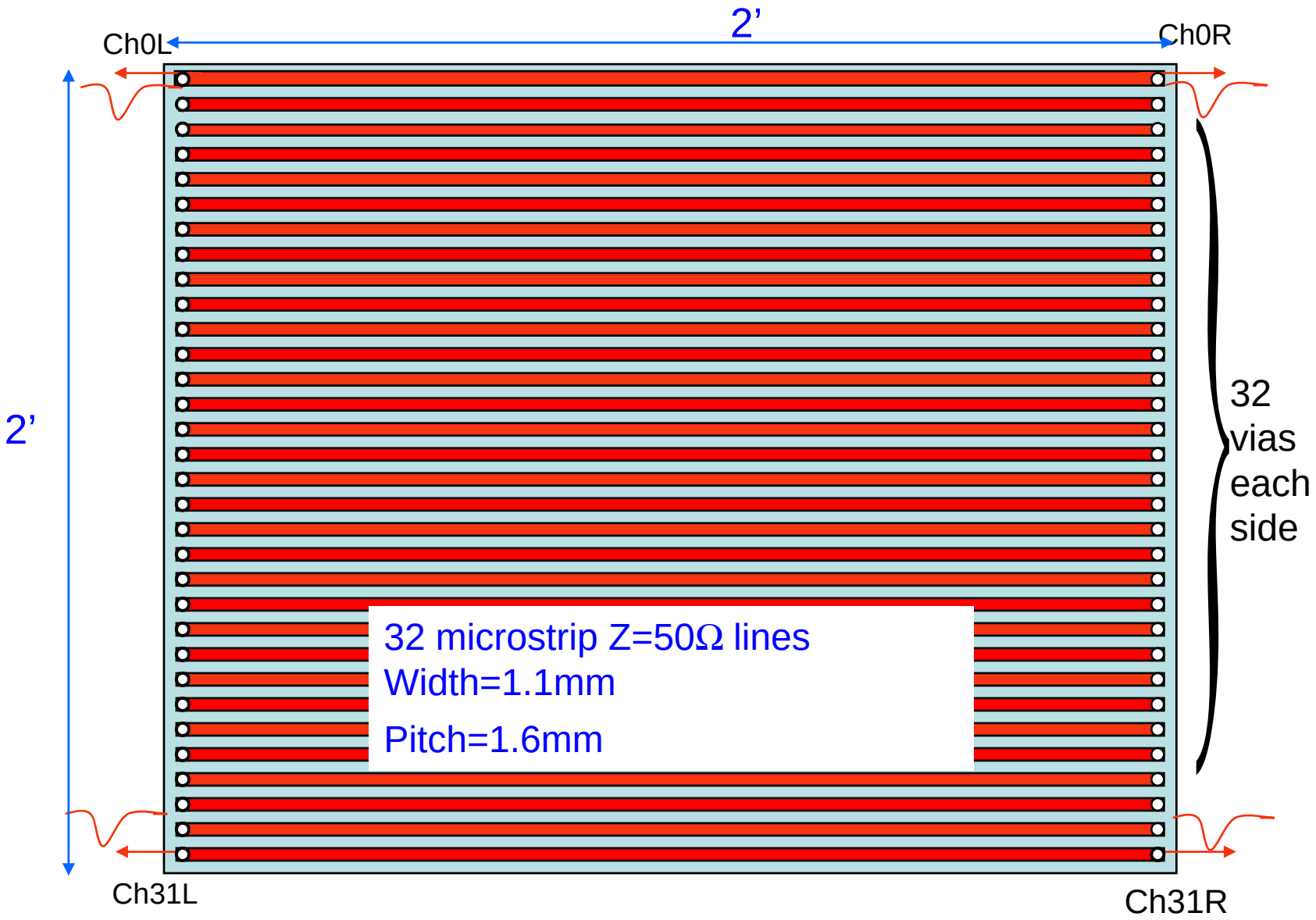

Prototype Transmission-line Readout Board Design and Simulations Based on Commercial 2'x2' 1024-Anode Tube

Interconnection:

(1) Elastomer

(2) Low-T solder (indium)

(3) Conductive Epoxy

(4) Ultimately capacitive coupling

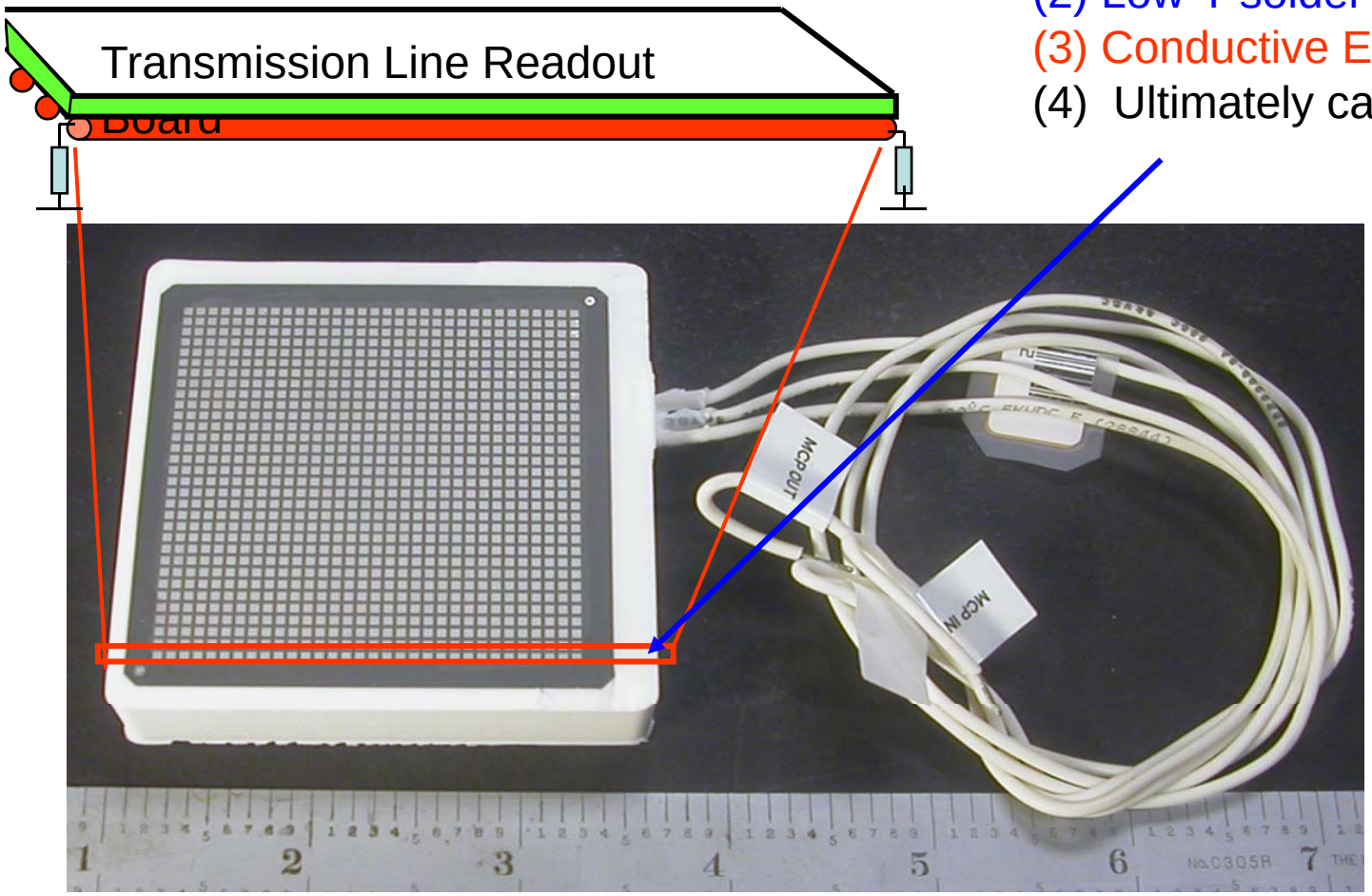

Layout of Prototype Transmission-line Readout Board

Board Size: 130x60mm
Board Thickness: 1.2mm

Trace length: 5.36', 4.83' , 3.97'

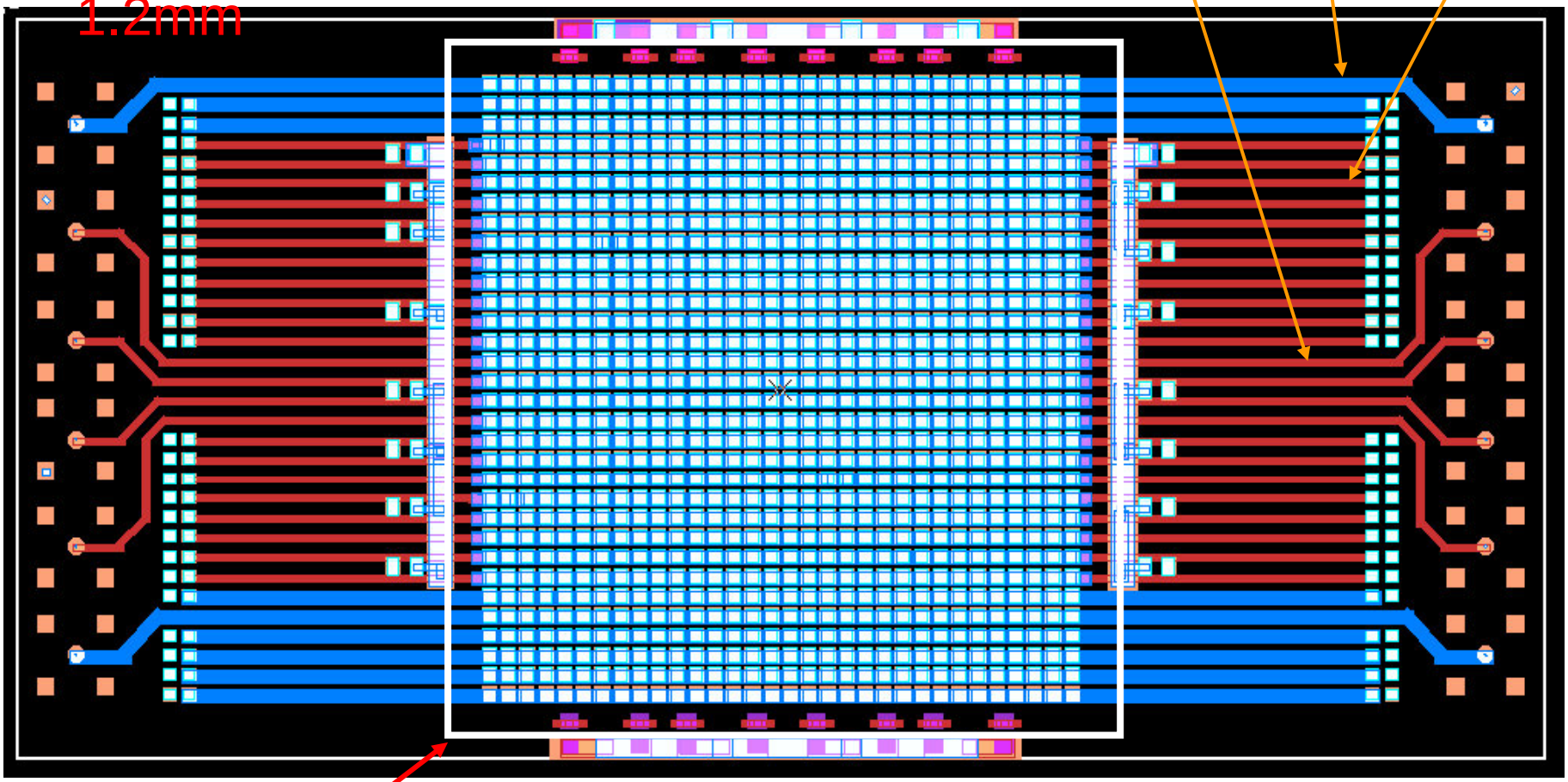

Tube Outline 58x58mm

Bandwidth Analysis for Transmission-line Readout

Simplified model with the transmission-line readout board attached to MCP-PMT:

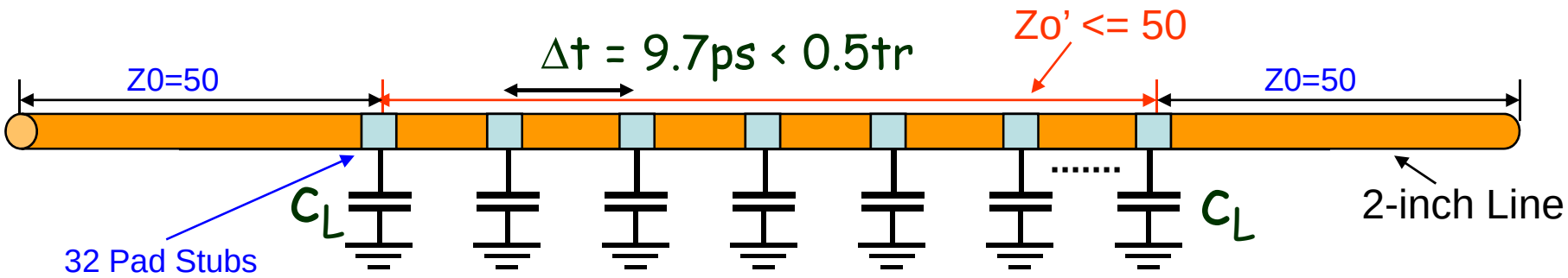

Equal distributed 32 C_L=100f along 2-inch line, It reduces impedance to Zo', However, it also reduced the BW.

$$Zo' = \sqrt{\frac{L}{C + \alpha C_L}}$$

$$\alpha = \frac{nC_L}{Length}$$

$$\alpha C_L = 1.6p$$

$$Tr = 2.2\tau = 2.2\frac{Z_0}{2}\alpha C_L \approx 100\,ps$$

$$BW \approx 3.5GHz$$

System Modeling for Transmission-line Readout

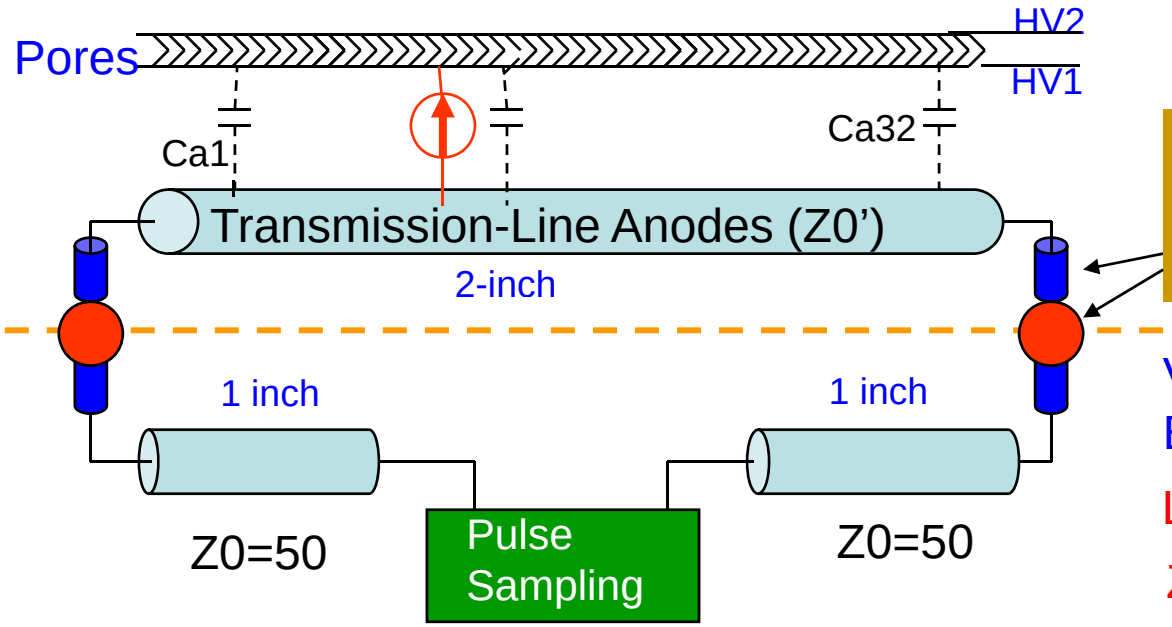

Impedance discontinuity caused by vias and ball contacts

Via size: 15x10x5 mils
Board Thickness: h=62mils

Lv=0.3n, Cv=150f

Zvia=31.6Ω

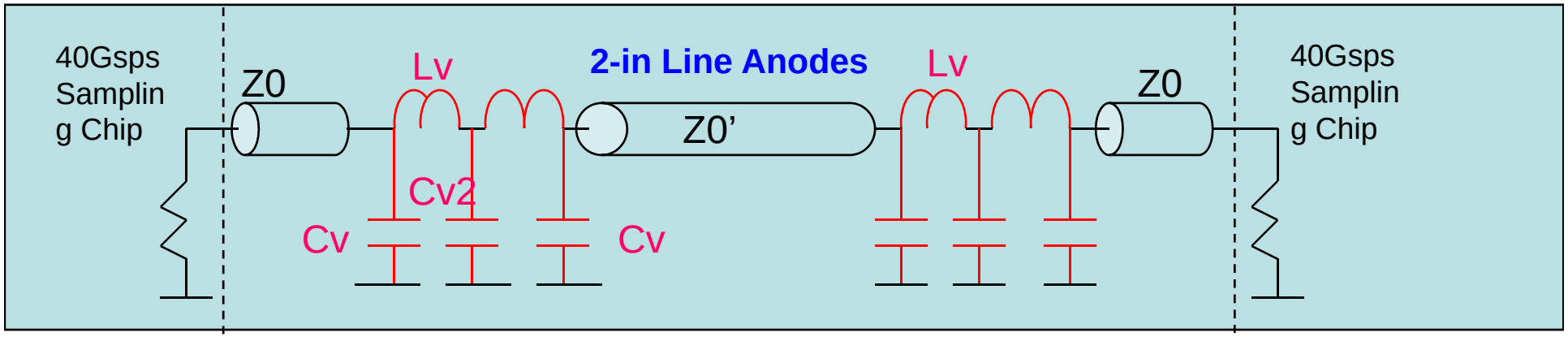

Outputs on Each End of Transmission-line with Stub Anodes (hit at pad-5)

Input Force: Tr=tf=200ps

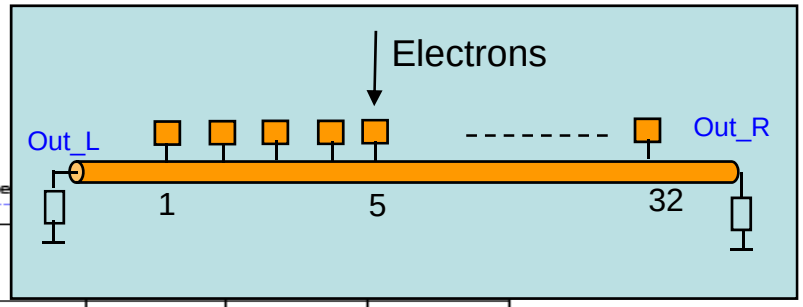

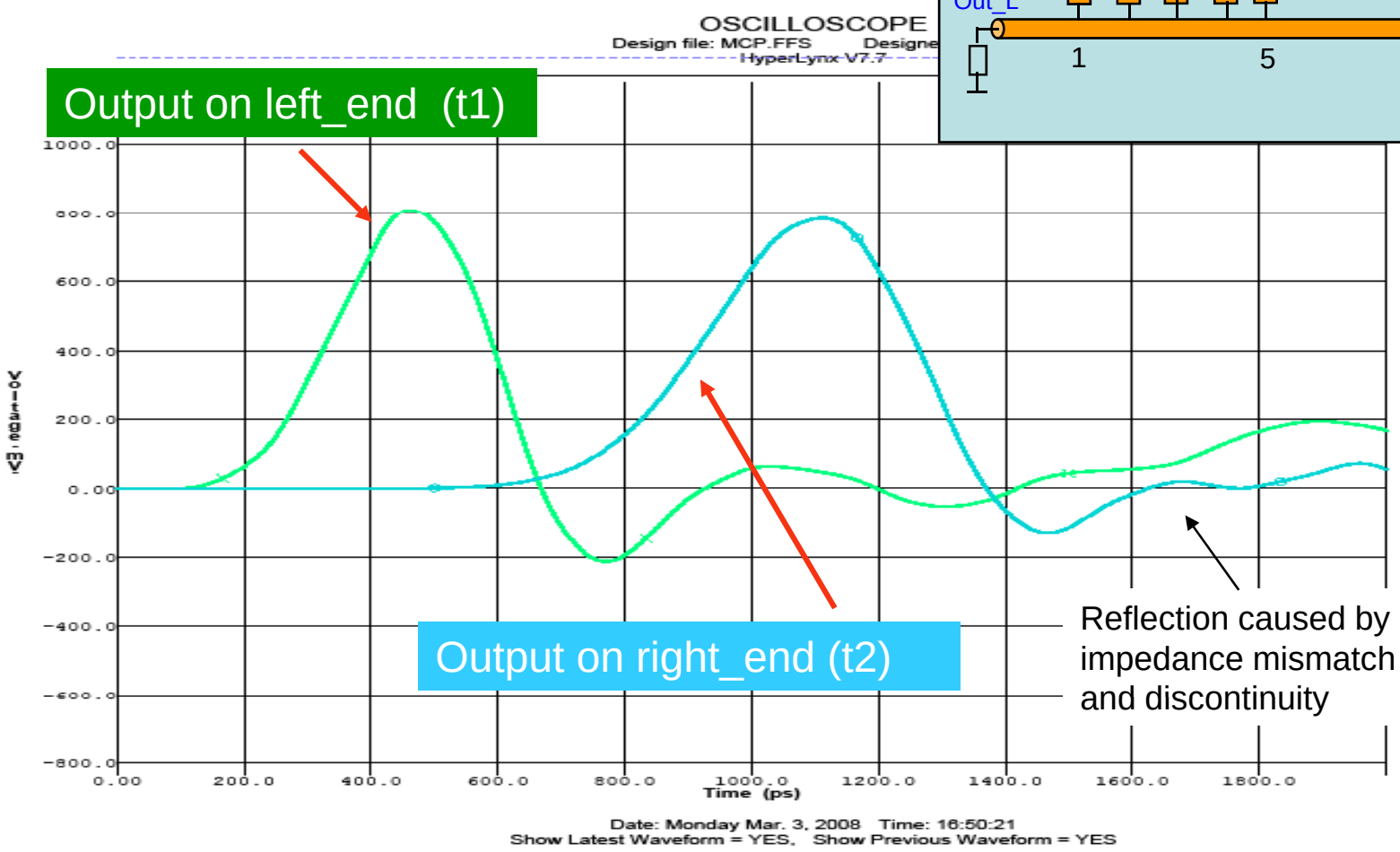

Outputs on Each End of Transmission-line with Stub Anodes (hit at pad-16)

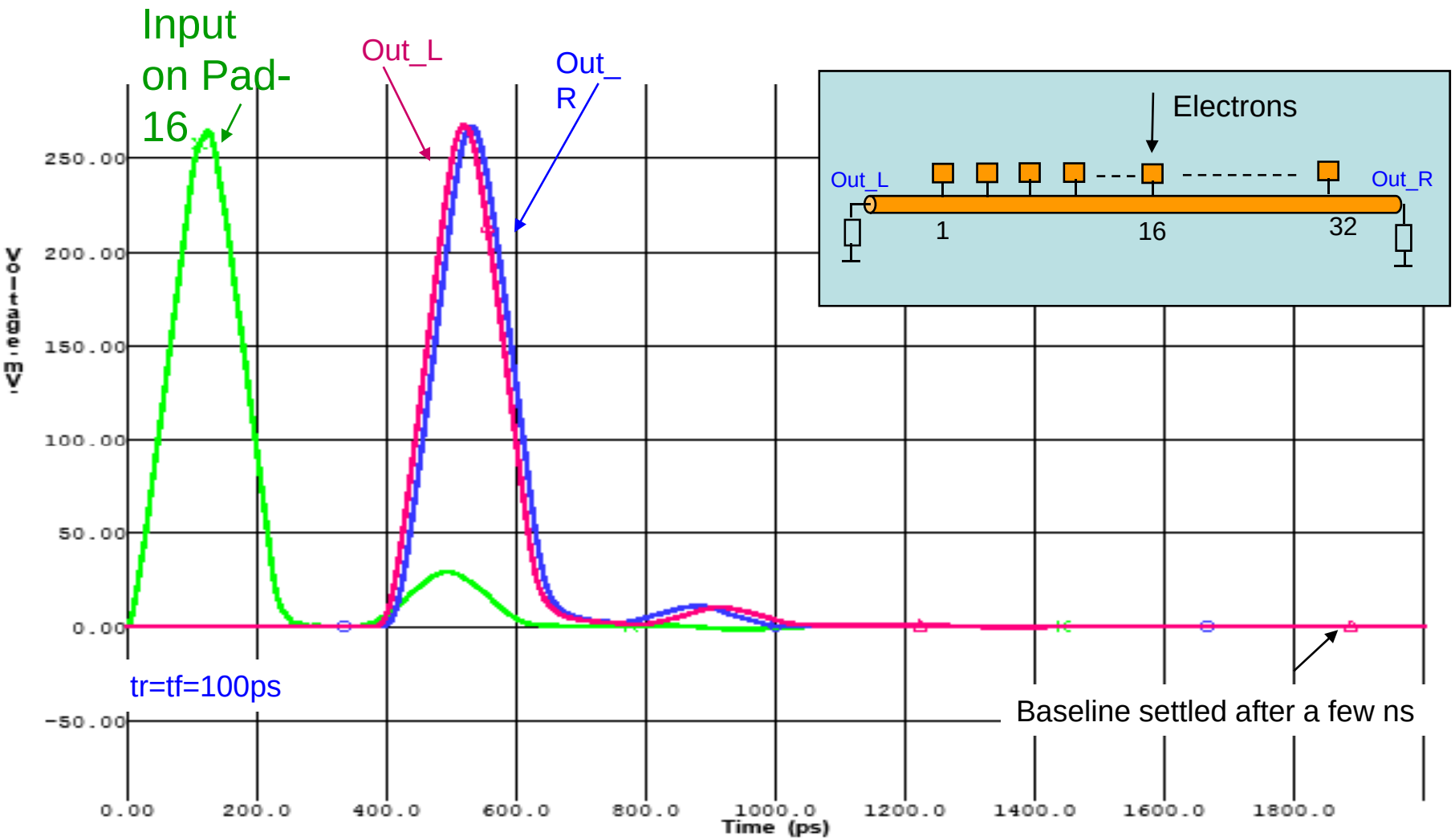

Outputs on Each End of Transmission-line without Stub Anodes (hit at the same position as pad-16)

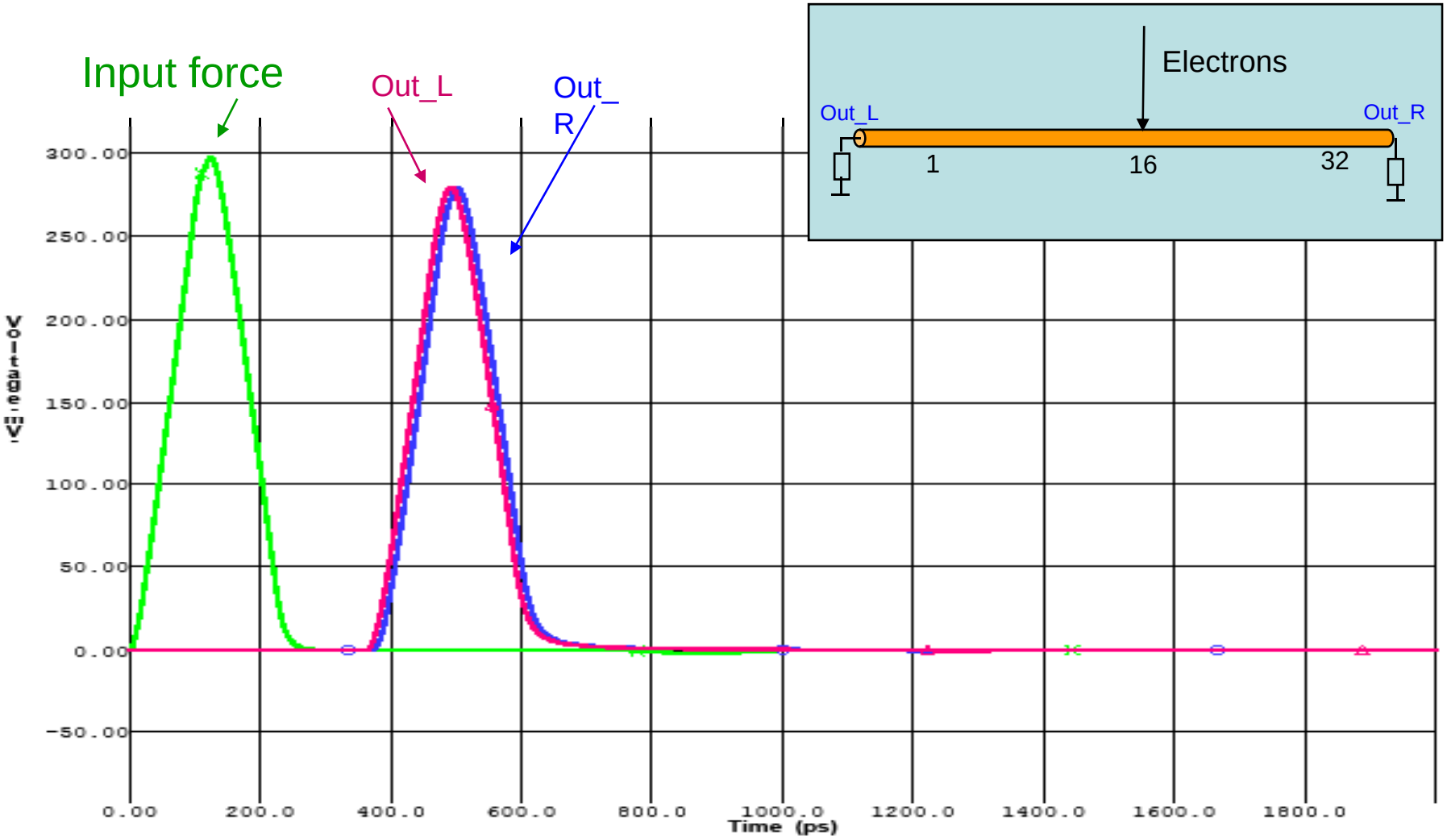

Simulation with Transmission-Line Anode up to 48-

Simulation Goal:

To understand analog signal bandwidth vs. the length of transmission-line for MCP anode design.

System Setup:

The simulation model is extracted from a board layout. The transmission-line impedance Z=50 ohms, the length is 48-inch with 4824 tapped anodes which induce 100f capacitance each.

Input Force:

A step voltage input force with a rise time of 100ps, an amplitude of 1.4Vexcites the line at the point 1-inch from the left end.

Outputs:

Comparing the rise time between both ends of the line.

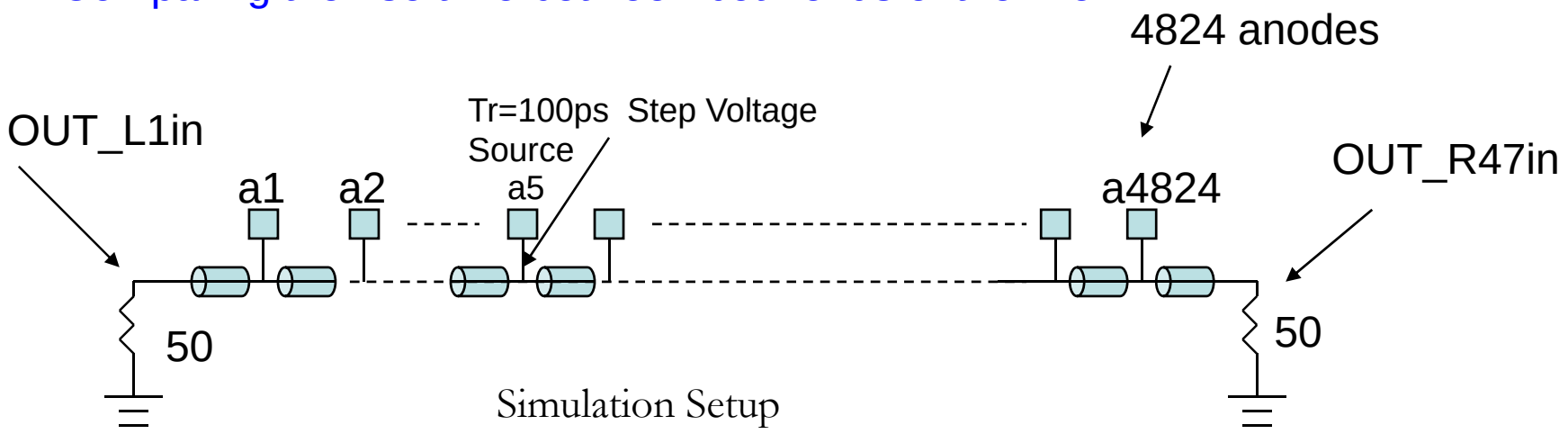

Simulation Setup

Responses on each end of 48-inch transmission-line (Hit at the position 1-ch to the left)

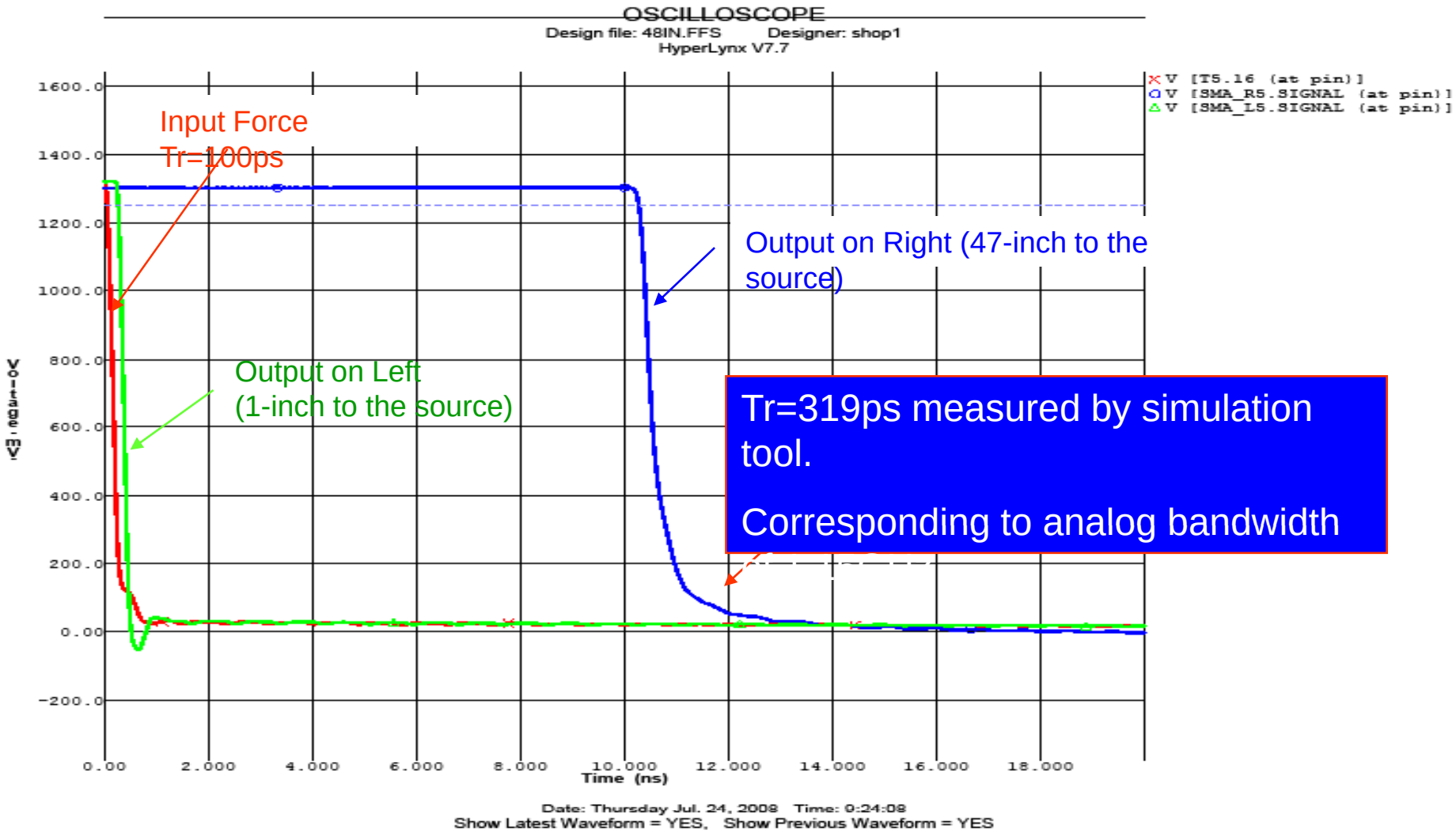

Conceptual Design of Transmission-line and Fast Sampling Readout Electronics

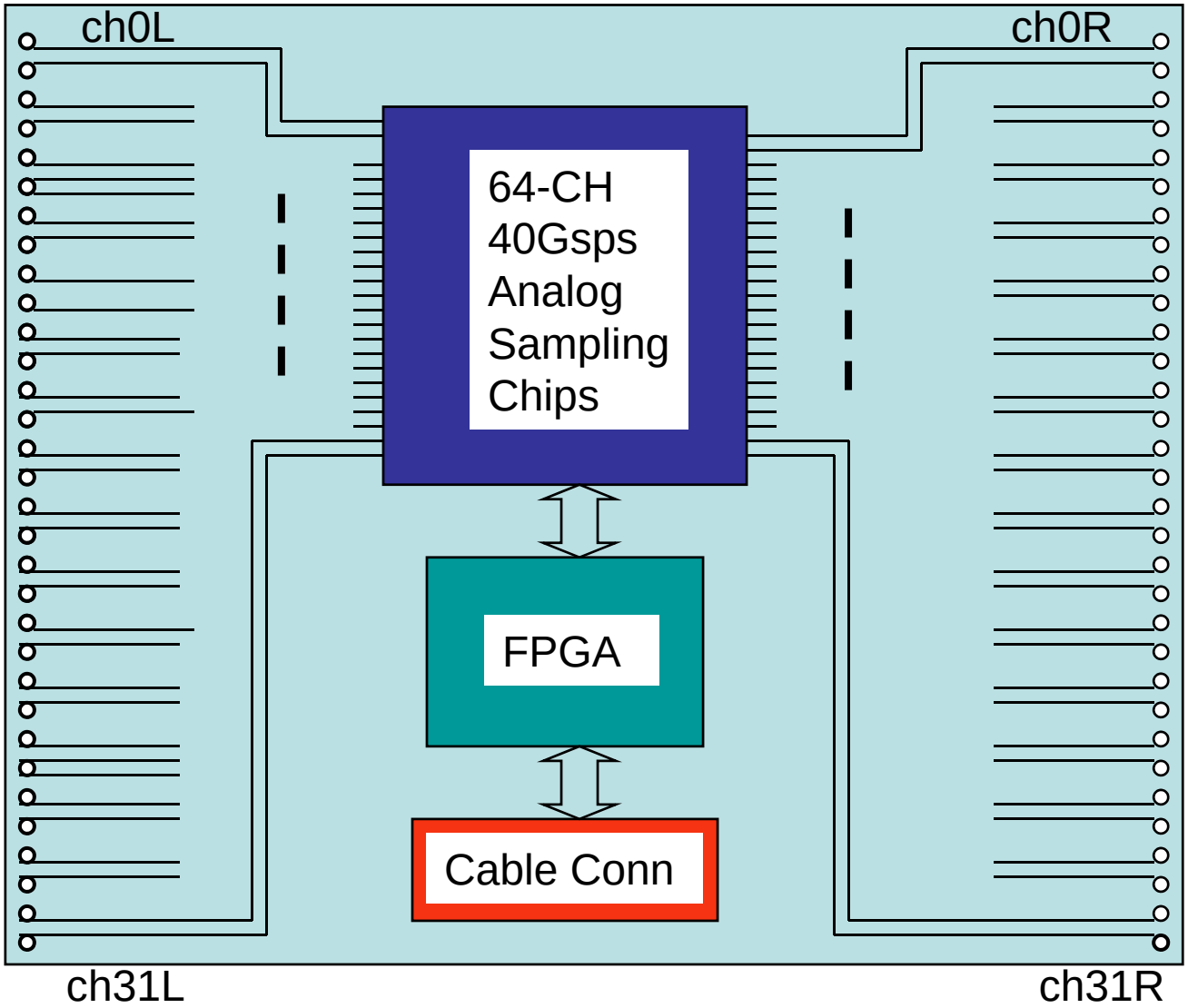

Only 64-ch readout electronics needed!

Fast sampling chip at UChicago

- **Technology: IBM 8RF DM 130nm CMOS design kit from CERN**
- **Key numbers of UChicago Fast Sampling Chip**
  - **-- 40 GHz sampling**
  - **-- 1-2 GHz analog bandwidth**
  - **-- 8 -10 bit ADCs**
  - **-- Self/Global trigger**
  - **-- Time Stamping**
  - **-- Readout protocols**
- **Work in Progress:**
  - **Unity gain input buffer design(1-2GHz BW)**
  - **Analog bandwidth is 1.6 GHz (-3dB) using current mode amplifier has been achieved (pre-layout).**

To be improved:

Tuning input impedance of 200Ω to 50 Ω with the IBM130nm CMOS DM (analog RF) process when available.

--Extend analog bandwidth as far as possible, if input buffer can not meet the requirement.

-Sampling timing generator design

-Sampling cells and ADCs: Experience from Orsay/Saclay, Hawaii and PSI.

Expect 2-3ps timing resolution with MCP signals

Summary

Advantages:

- Use many fewer readout electronics channels
- Readout timing, position and energy information
- Good signal bandwidth
- Easy to match impedance all the way to the chip input

Plans (short and long term)

- **Prototyping transmission-line readout with laser stand and 40Gsps scope (in few weeks)**
- **Transmission-line readout with two LAB2 or two DRS4 Chips (possibly 2x interleaving?) (in few months)**

- **Development of 40Gsps sampling chip for large scale detectors**
  ---2-ch demonstration chip with IBM 8RF 0.13u CMOS (year 1)
  --- 32/64-ch chip (year 2)
- **Built-in transmission-line anode design and simulation (need to work with tube designers)**