A Radiation Hard Current Reference Circuit in a Standard 0.13um CMOS Technology.

V.Gromov, R.Kluit

Nikhef, Kruislaan 409, Amsterdam, the Netherlands.

vgromov@nikhef.nl

Abstract.

A CMOS bandgap current reference circuit has been developed in a 0.13 um CMOS technology. The circuit exhibits low sensitivity to temperature- and power supply variations. The combination of the natural properties of thin gate oxide MOS transistors with a gate-all-around layout approach makes stable operation in harsh radiation environment possible. In the present design we utilize only MOS structures and poly-silicon resistors. The output current varies in the range 0.9 % when the circuit is being irradiated up to a 200 Mrad.

I. Introduction.

Integrated circuits generating reference currents with low sensitivity to temperature variation and power supply variations are commonly used in analog blocks such as current comparators, A/D and D/A converters, and bias circuits. In high-energy physics experiments there is an additional requirement; that is to deliver a stable current during operation in ionizing radiation environments.

With ongoing CMOS evolution, the gate-oxide thickness steadily decreases, resulting in an increased radiation tolerance of MOS transistors. This, in combination with special layout techniques, yields to circuits with a high inherent robustness against X-rays and other ionizing radiation. In bandgap current references, the dominant radiation susceptibility is, then, no longer associated with the MOS transistors, but is dominated by the diodes.

For this reason in the present design we excluded diodes and used alternative structures called dynamic-threshold MOS transistors (DTMOST) instead. The DTMOST is made of a standard p-channel MOST by means of tying the gate terminal to the drain and bulk terminals. The source terminal is left open. This two-terminal device demonstrates an exponential (diode-like) current-to-voltage characteristic when the voltage is lower than 250mV. This feature enables us to consider the DTMOST as a "low-voltage diode" and to use it instead of an ordinary diode in standard bandgap circuits (see Figure1) [1].

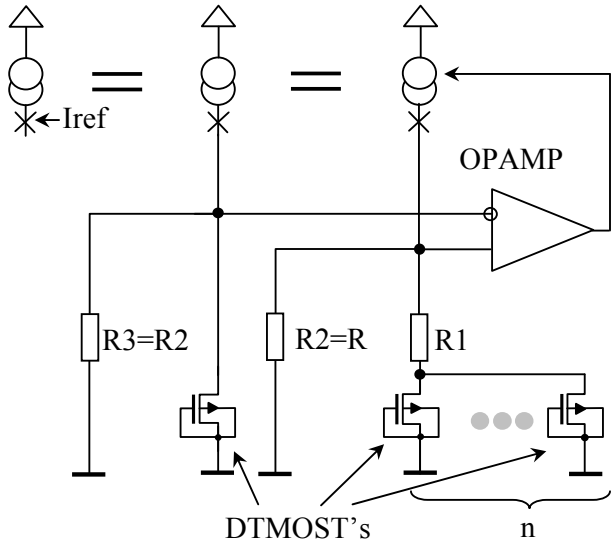

Figure 1: Architecture of the bandgap current reference circuit, featuring DTMOST's.

II. Characterisation of the Dynamic-Threshold MOS Transistor (DTMOST).

In 1999 Anne-Johan Annema proposed to use DTMOST structure in CMOS technologies [2]. It is in fact a p-channel MOS (PMOST) transistor with gate, drain and substrate contacts connected together. In a limited region this device behaves similar to a conventional diode with exception: it needs far lower bias voltage to operate (see Fig.2).

The exponential behaviour of the voltage-to-current characteristic is of primary importance because it enables us to construct a current source, which delivers a current that is proportional to the absolute temperature (PTAT). This can be used to implement a mechanism of temperature compensation in a bandgap reference circuit. A conventional diode has an exponential voltage-to-current relationship above 650mV while the DTMOST device is exponential within a region from 100mV to 250mV (see Fig.2).

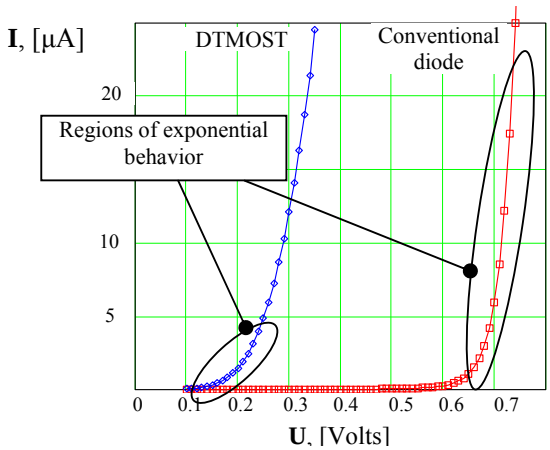

Figure 2: Current-to-voltage characteristics for both DTMOST configuration and conventional diode configuration.

III. Current reference circuit.

The complete current bandgap reference circuit consists of DTMOST devices, a pair of cascoded current sources and a two-stage operational amplifier (see Fig.3). The voltage across the DTMOST is Conversely Proportional to Absolute Temperature (CTAT) and therefore also the current (I1) through resistor R2. On the other hand, the current (I2) through the DTMOST (T1) is directly Proportional to Absolute Temperature (PTAT) [3]. After an appropriate adjustment, superposition of the PTAT and the CTAT currents results in a temperature independent reference current.

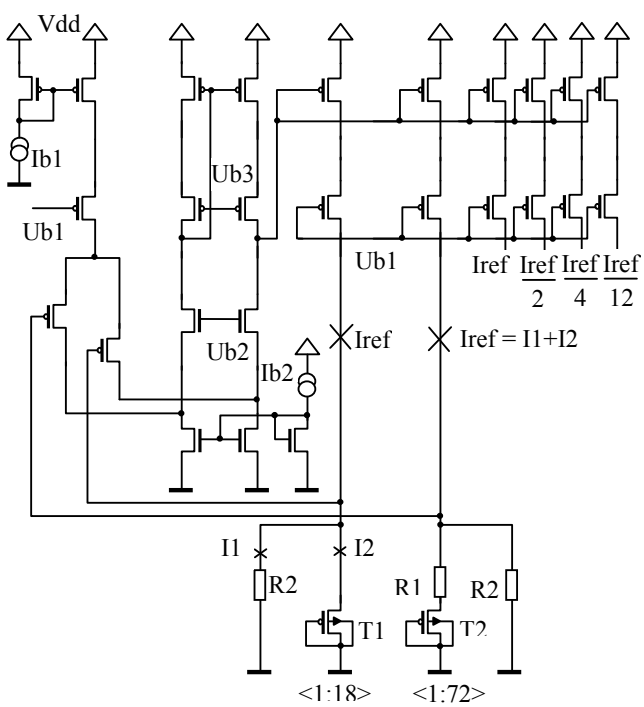

Figure 3: Schematic of the current bandgap reference.

IV. Experimental results.

A. *Temperature dependence of the reference current.*

Eight test chips were at our disposal. In order to vary the value of the PTAT resistor R1 (see Fig.2) was divided in sections, which can be externally bypassed. In this way the slope of the PTAT current could be trimmed to the slope of the CTAT current in order to achieve the minimum temperature coefficient of the reference current. Under that condition, the current to temperature relation is a parabolic function with a maximum deviation of less than 0.2μA (0.5%) in the range from 0ºC up to 50ºC (see Fig.4). When untrimmed the temperature coefficient of the reference current takes a turn to the worse and comes to the value of 0.06%/ºC.

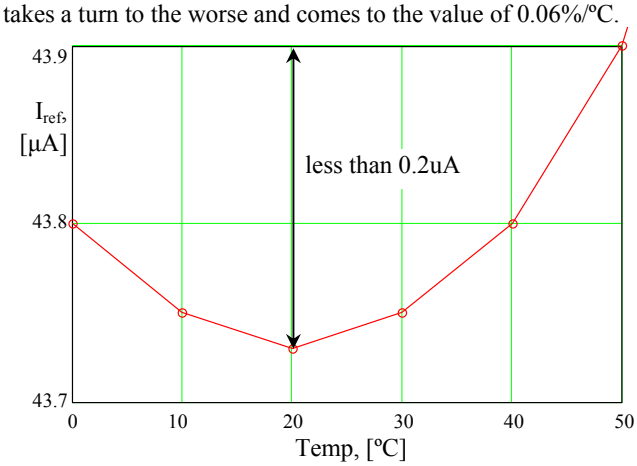

Figure 4: The measured reference current as a function of temperature.

B. *Fluctuation of the reference current caused by irradiation.*

We used the Nikhef's in-house ^{90}Sr source for the irradiation of the chips. The effect caused by irradiation consists in the shift of the reference current while the circuit remains fully operational. As depicted in Fig.5 the reference current shifts in the range ±0.4μA (0.9%) after it has been irradiated with dose as high as 200Mrad.

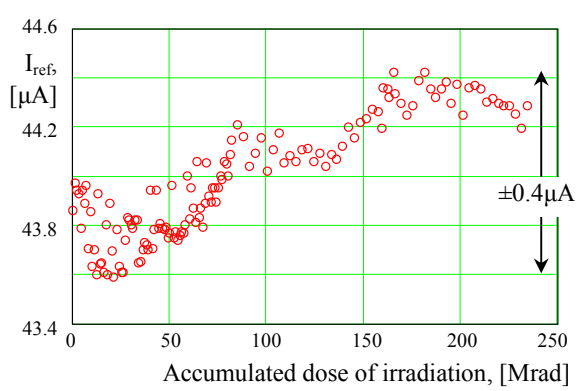

Figure 5: Shift of the value of the reference current in the time of irradiation.

C. *Chip-to-chip spread of the reference current.*

In some applications not only the stability of the reference current is important but also its absolute value. The absolute value differs from chip to chip. It is caused by the process variation. Based on measurements on a small number of (unselected) samples, the quadratic mean value of statistical spread of the reference current has been estimated as low as 0.6% (see Fig.6).

The present circuit has four outputs delivering different currents (see. Fig.3). This topology makes it possible to construct a 4-bit DAC and adjust the value of output current.

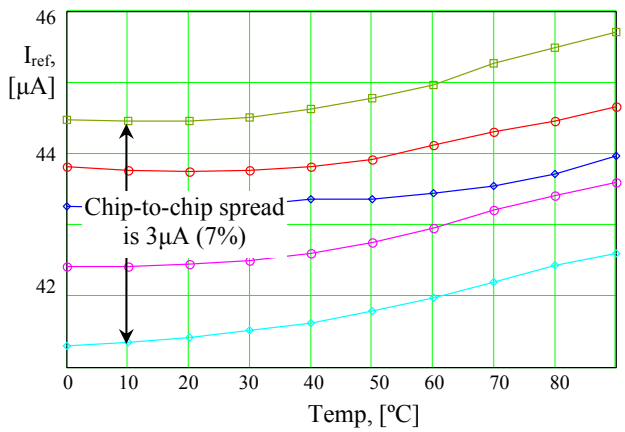

Figure 6: Chip-to-chip spread of the value of the reference current.

V. Conclusions.

A new bandgap current reference circuit has been designed in a standard 0.13um CMOS technology. The present design has its origins in the current summing bandgap reference circuit proposed by Banba [3].

We replaced diodes with dynamic-threshold MOS transistors (DTMOST) in order to improve the radiation tolerance of the circuit.

This circuit delivers a stable current which can be used as a reference for current mirrors or it can be converted into a stable voltage, if necessary.

The most important specifications are:

- Power supply voltage from 0.8V to 1.3V,
- The circuit has four outputs providing currents of 2.5μA, 7.5μA, 16.5μA and 30μA,
- Output current-to-power supply voltage sensitivity 10ppm/mV
- Output current-to-the temperature sensitivity 100ppm/grad (when trimmed), or 600ppm/grad (when untrimmed),
- Channel-to-channel spread of the absolute value of the output current 7%,
- Variation of the output current caused by ionizing radiation up to dose of 200 Mrad is +-0.9%.

VI. References.

[1] V.Gromov, A.J. Annema, R. Kluit et al., "A Radiation Hard Bandgap Reference Circuit in a Standard 0.13um CMOS Technology," *IEEE Transactions on Nuclear Science*, vol.54, issue6, pp. 2727-2733, Dec. 2007.

[2] Anne-Johan Annema, "Low-Power Bandgap References Featuring DTMOST's", *IEEE Journal of Solid-State Circuits,* vol.34, No.7, July 1999.

[3] Hironori Banga et al., "A CMOS Bandgap Reference Circuit with Sub-1-V Operation", *IEEE J.Solid-State Circuits,* vol.34, No.5, May 1999.