Optoelectronics, a global telecom carrier's perspective

TWEPP 2008, 16.09.08

Dr Jeremy Batten
jeremy.batten@cw.com

Cable&Wireless

- **C&W Optical Network**
- **Optical fibre transmission and DWDM review**
- **10 Gb/s: current standard**
- **40 Gb/s developments and beyond**
- **Optical wavelength switching**
- **Summary**

DWDM – Dense Wavelength Division Multiplexing

C&W Optical Network

BREADTH AND DEPTH

Cable&Wireless

C&W OPTICAL NETWORK
RICH HISTORY

- 1860s One of the oldest telecoms companies
- Subsea cable operator linking Britain internationally
  - Eastern telegraph company
- 1928 Merger with Marconi Wireless: Cable & Wireless
- 1947 Nationalisation
- 1981 Privatisation
- 1983 Mercury joint venture license to compete in UK
- 2005-present UK consolidation (Energis, Thus?)
- Network presence in 153 countries, Incumbent in several ex-UK territories
- 4000 employees

C&W OPTICAL NETWORK
SERVICES and GLOBAL INFRASTRUCTURE

1. Coverage: UK, Europe, Asia and US + multiple in-country operations
2. Services: IP Virtual private networks, wholesale voice, managed hosting, global bandwidth, IP peering

1+2 => Demands high-capacity optical networks

- Multiple DWDM systems UK – fibre duct owned,
- Europe, East US and Singapore – leased fibre on which DWDM deployed
- US, Japan, Hong Kong – leased wavelength
- Rest of world – leased sub-wavelength
- Under-sea cable systems (Apollo transatlantic)

C&W OPTICAL NETWORK
NETWORK ARCHITECTURE

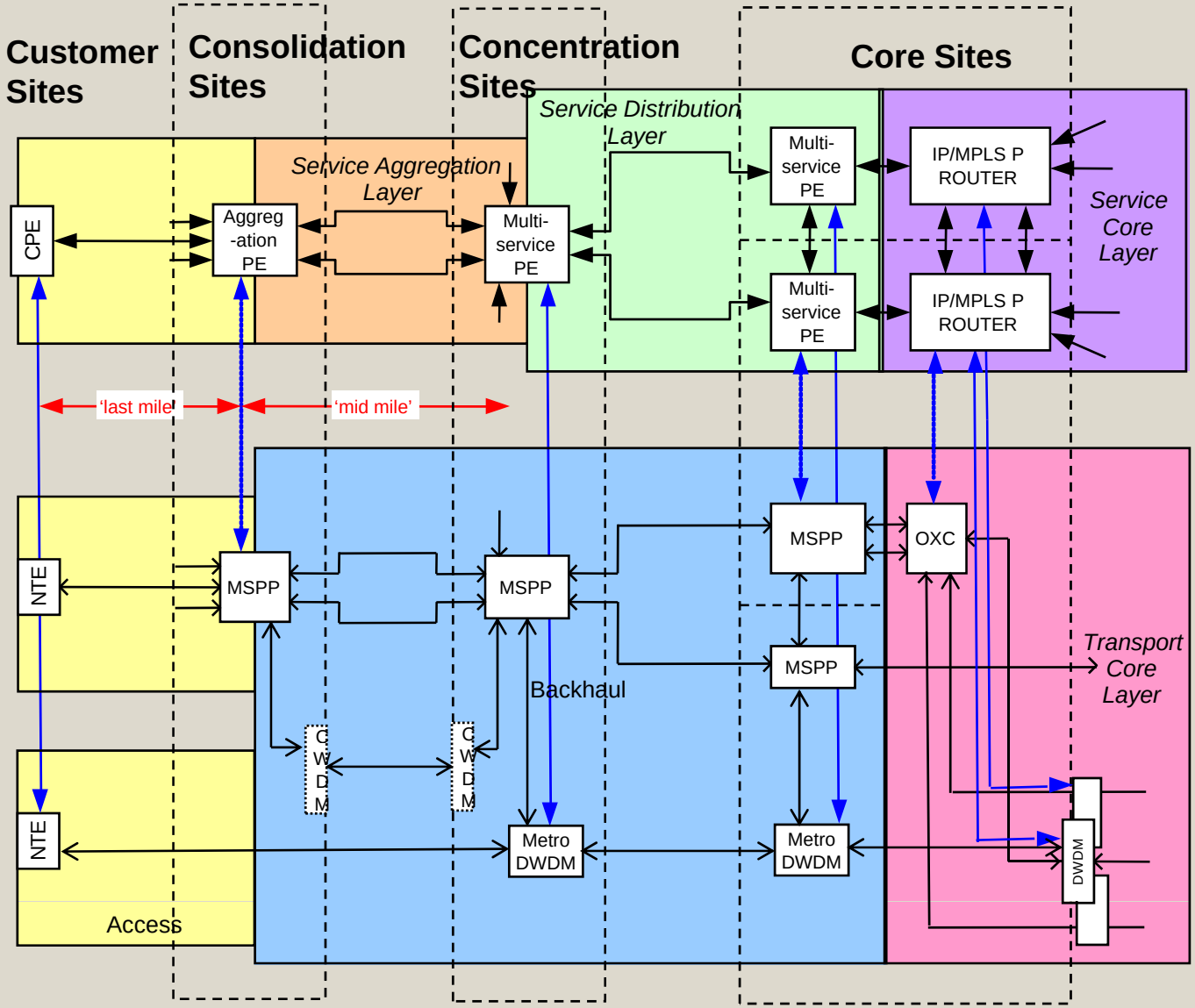

INTERFACE TO OPTICAL NETWORK

C&W OPTICAL NETWORK

Deployed terrestrial and subsea DWDM systems

- C&W deployed systems. Subsea systems are joint ventures

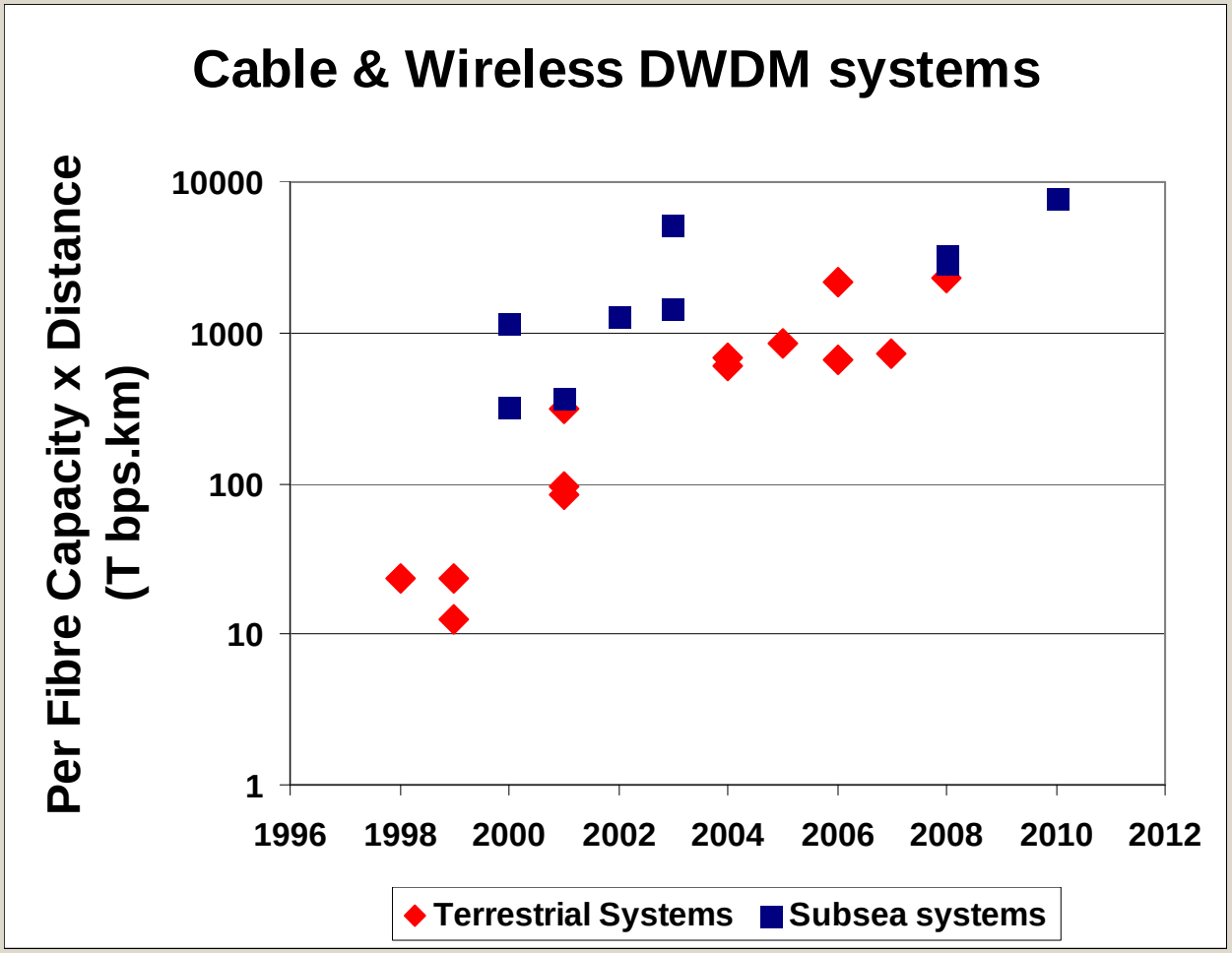

1 Tb/s over 1000km

Terrestrial systems doubling every ~1.5 years

C&W OPTICAL NETWORK

Typical system characteristics

- Scalability – 100 wavelengths
- Reach – up to 2000km
- Flexibility
  - Reconfigurability
  - Tunable optics (network side, 80 wavelengths)
  - Pluggable optics (client side, 850/1310/1550nm)
- Power ≤ 2kW per 600mm x 600mm x 2.2 rack
  - Expectation that 1 Tb/s should occupy ~2 racks

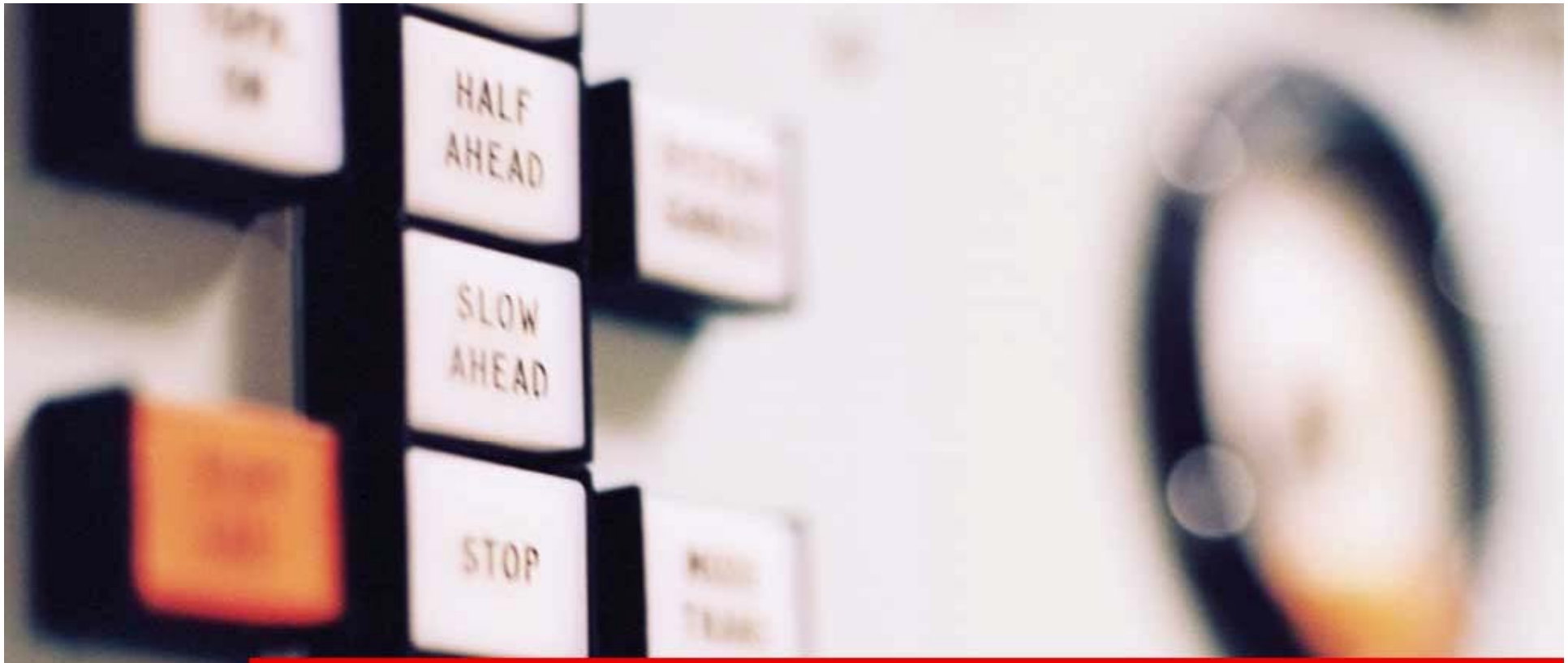

Optical fibre transmission and DWDM* REVIEW

IT'S NOT RADIO!

*Dense Wavelength Division Multiplexing

Cable&Wireless

OPTICAL IMPAIRMENTS

- Attenuation
- Chromatic dispersion
- Polarisation mode dispersion
- Non-linear effects

Optical fibre transmission and DWDM review

ATTENUATION

- Silica glass fibre absorption – Raleigh scattering λ^{-4}, OH ion peaks and intrinsic high and low boundaries
- Erbium Doped Fibre Amplifiers (EDFA) and Raman amplifiers commonly deployed to mitigate attenuation

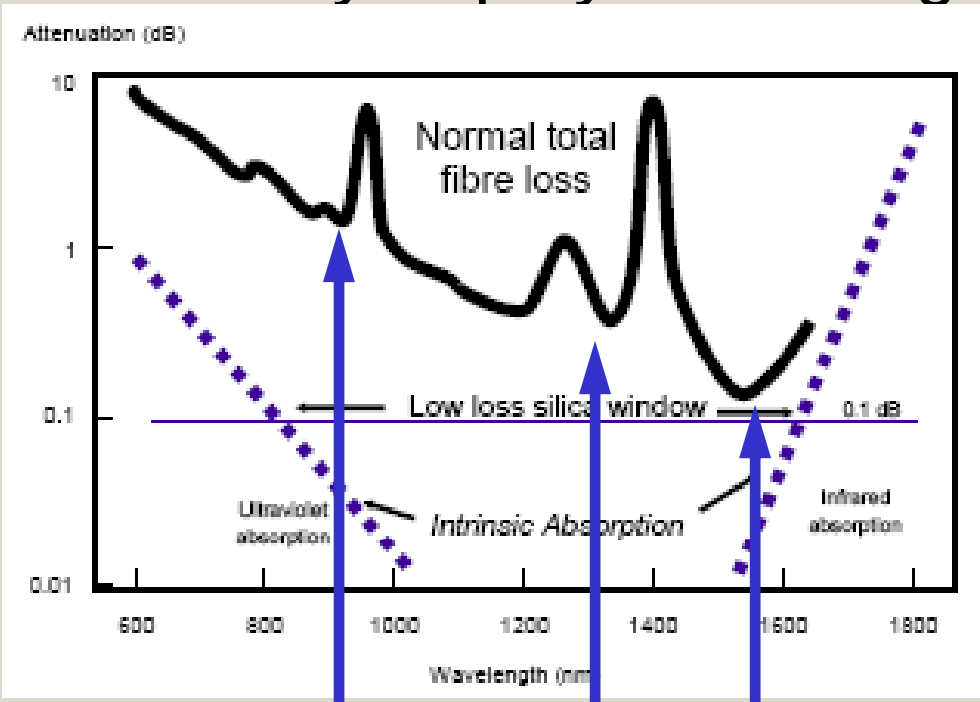

0.18dB/km

25dB gain
->100km

Intra-office
850nm

Inter-office
1310nm

Long haul DWDM
1530nm-1560nm

CHROMATIC DISPERSION

- Two ITU standardised fibre types are widely deployed:
- G.652 – dispersion zero near 1310 nm; ~19 ps/nm.km at 1550 nm
- G.655 – non-zero dispersion shifted, dispersion zero just below 1500 nm, ~5 ps/nm.km at 1550 nm
- Compensating fibre is widely used on long haul systems
- At 10 Gb/s the bit duratio
  dispersion can be tolerate

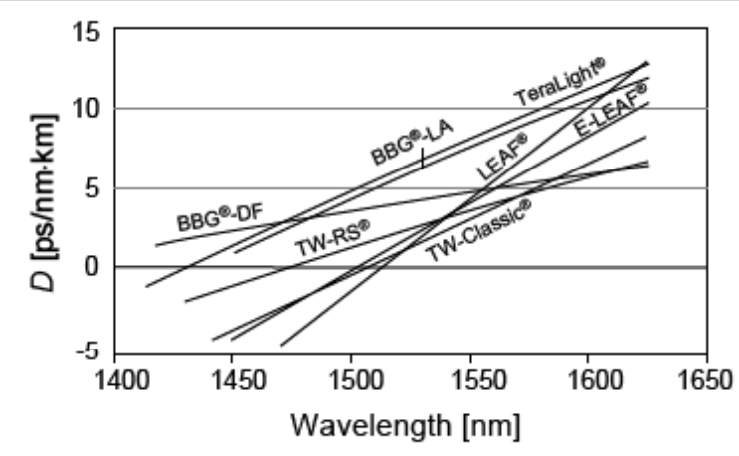

ITU: International Telecommunications Union

POLARISATION MODE DISPERSION (PMD)

- Polarisation states propagate at different speeds due to physical imperfections in fibre
- Typically better than 0.2 ps/√km but can be much worse
- Generally not a problem for 10 Gb/s transmission but significant f

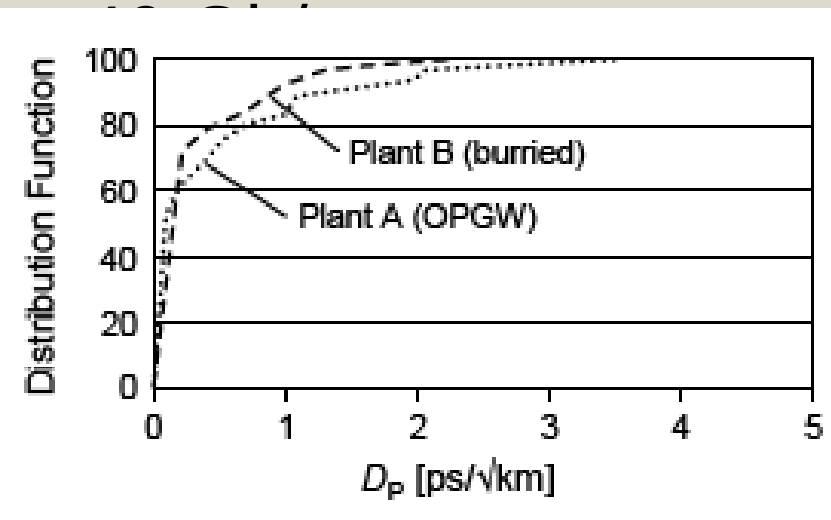

NONLINEAR EFFECTS

- Many types: self phase modulation, cross phase modulation, four-wave mixing
- All strongly dependent on optical power density in fibre

- Balance benefits of better OSNR with increased nonlinear effects as power is increased

WAVELENGTH MULTIPLEXING

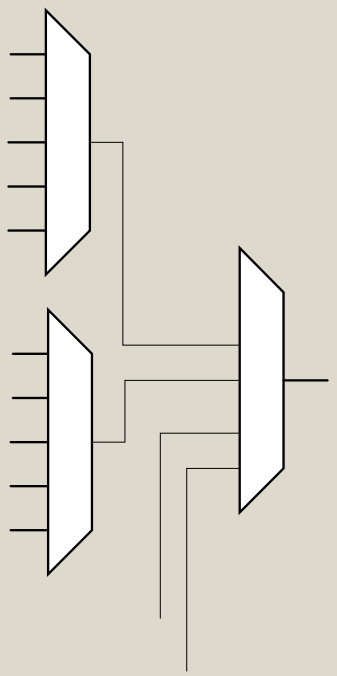

1530 nm ⟷ 1565nm

196 THz ⟷ 191.5 THz

0.4 nm, 50 GHz spacing =>
80+ wavelengths
EDFA gain window

Raman gain window > 120 nm, > 15 THz

10 Gb/s

The Industry standard

Cable&Wireless

10 Gb/s
INDUSTRY STANDARD

- On-Off keyed Nonreturn-to-Zero (NRZ)
- Continuous wave laser, external modulator
- Full C-band tunability
- pluggable client (variable reach, 850nm/1310nm)
- Forward Error Correction (≥7% overhead, G.975/G.709)
- 50 GHz multiplexing grid (0.2 b/s/Hz)
- 1000-2000km range
- Reconfigurable intermediate node add/drop to/from either direction (2 degree ROADM)
- 35W per transceiver with client and network side optics

10 Gb/s

ALTERNATIVE APPROACHES

- Full electronic chromatic dispersion compensation
- Return-to-Zero (RZ) and Soliton - reach
- Advanced amps (Raman) – optical bandwidth, longer single span
- Photonic Integrated Circuits InP– 10*10 Gb/s on a chip: cheaper, more frequent, regeneration avoids impairments by reducing regeneratio
  (Infinera)

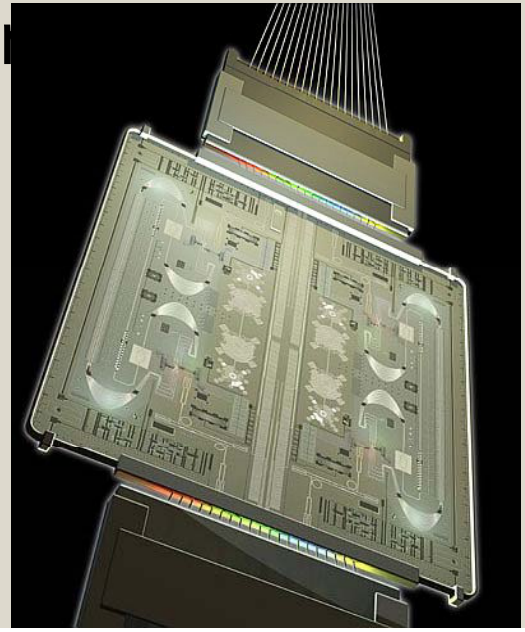

40 Gb/s

READY FOR DEPLOYMENT

Cable&Wireless

40 Gb/s
CLIENTS

- High end routers
  - Tb/s IP routers operating at 10 Gb/s require many parallel links
  - Problems: load sharing, routing tables, management, power consumption
  - Solution: 40 Gb/s now, 100Gb/s later
- 4 X 10 Gb/s -> 40 Gb/s multiplexers for higher density

40 Gb/s
REQUIREMENTS

- Must co-exist with current deployed 10 Gb/s
- Existing link engineering rules for:
  - amplifier gain and physical spacing
  - attenuation
  - chromatic dispersion
  - polarisation mode dispersion
  - 50GHz filter spacing
- CD tolerance *16 worse, PMD tolerance *4 worse compared with 10 Gb/s

40 Gb/s

MODULATION FORMATS

INTENSITY MODULATION

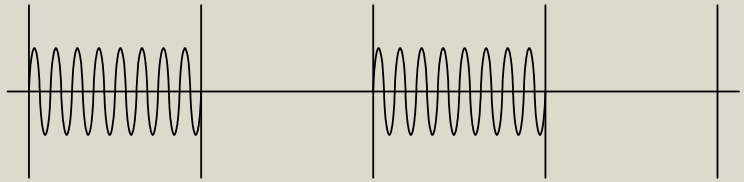

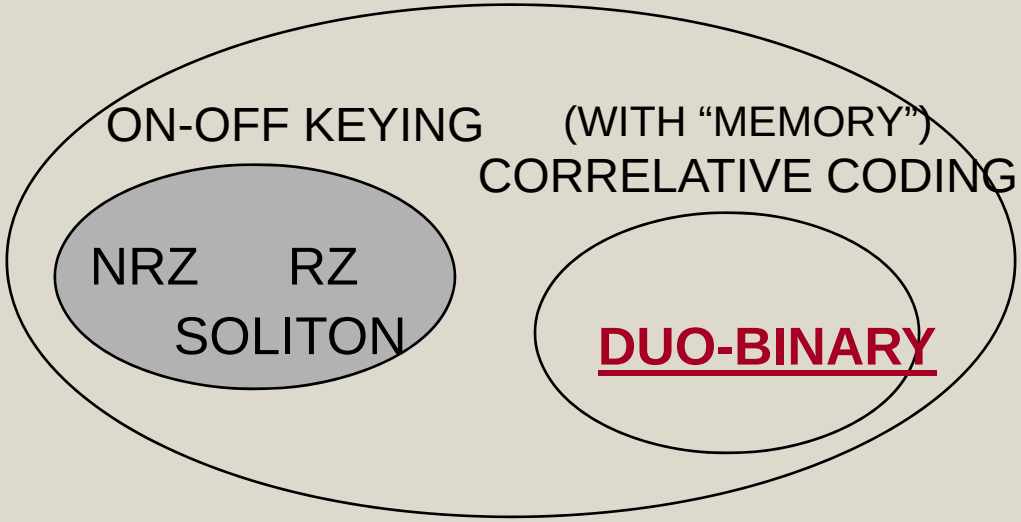

PHASE MODULATION

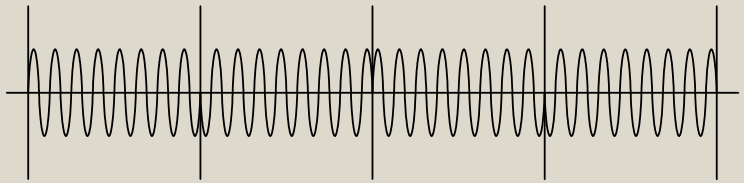

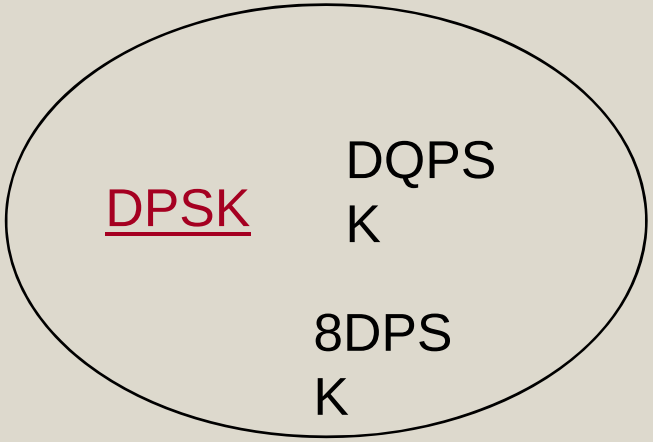

FREQUENCY MODULATION

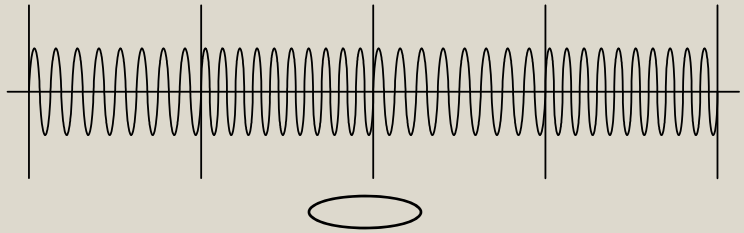

POLARIZATION MODULATIO

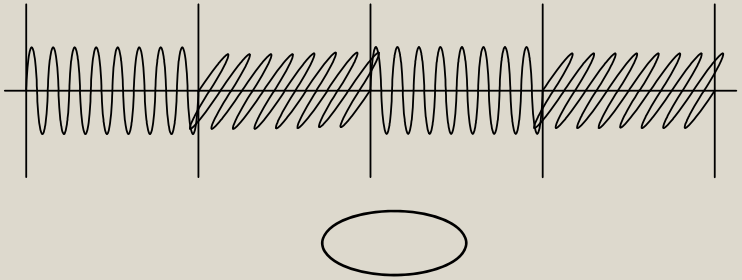

40 Gb/s
DUO-BINARY

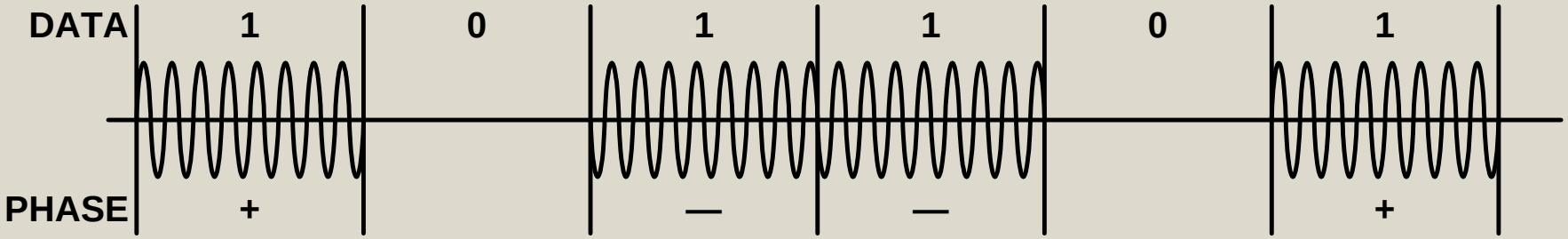

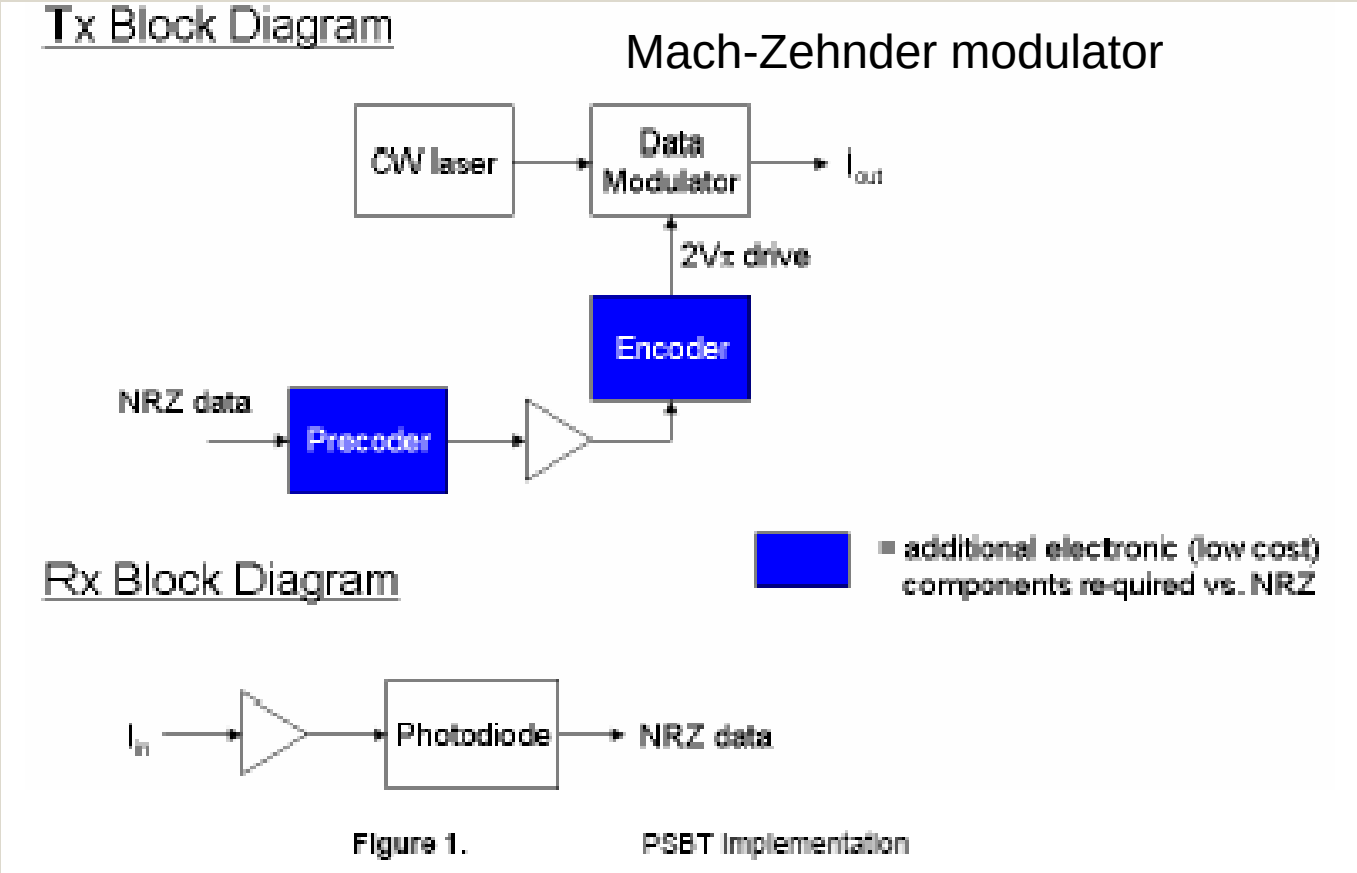

Figure 1. PSBT Implementation

40 Gb/s
DIFFERENTIAL PHASE SHIFT KEYING - DPSK

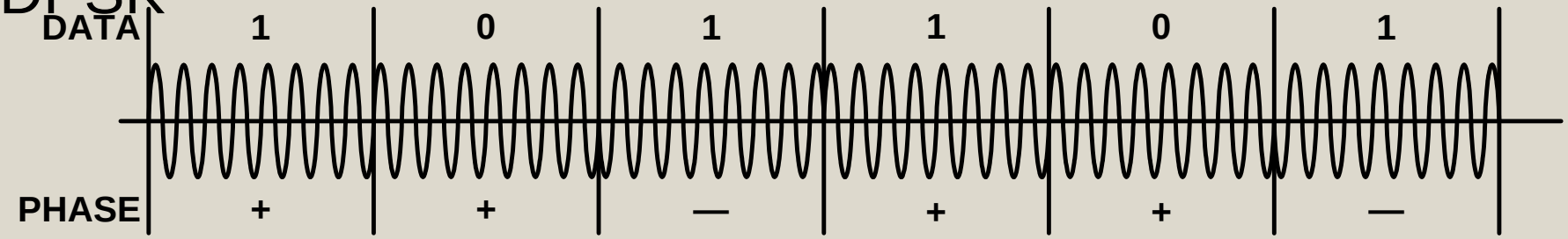

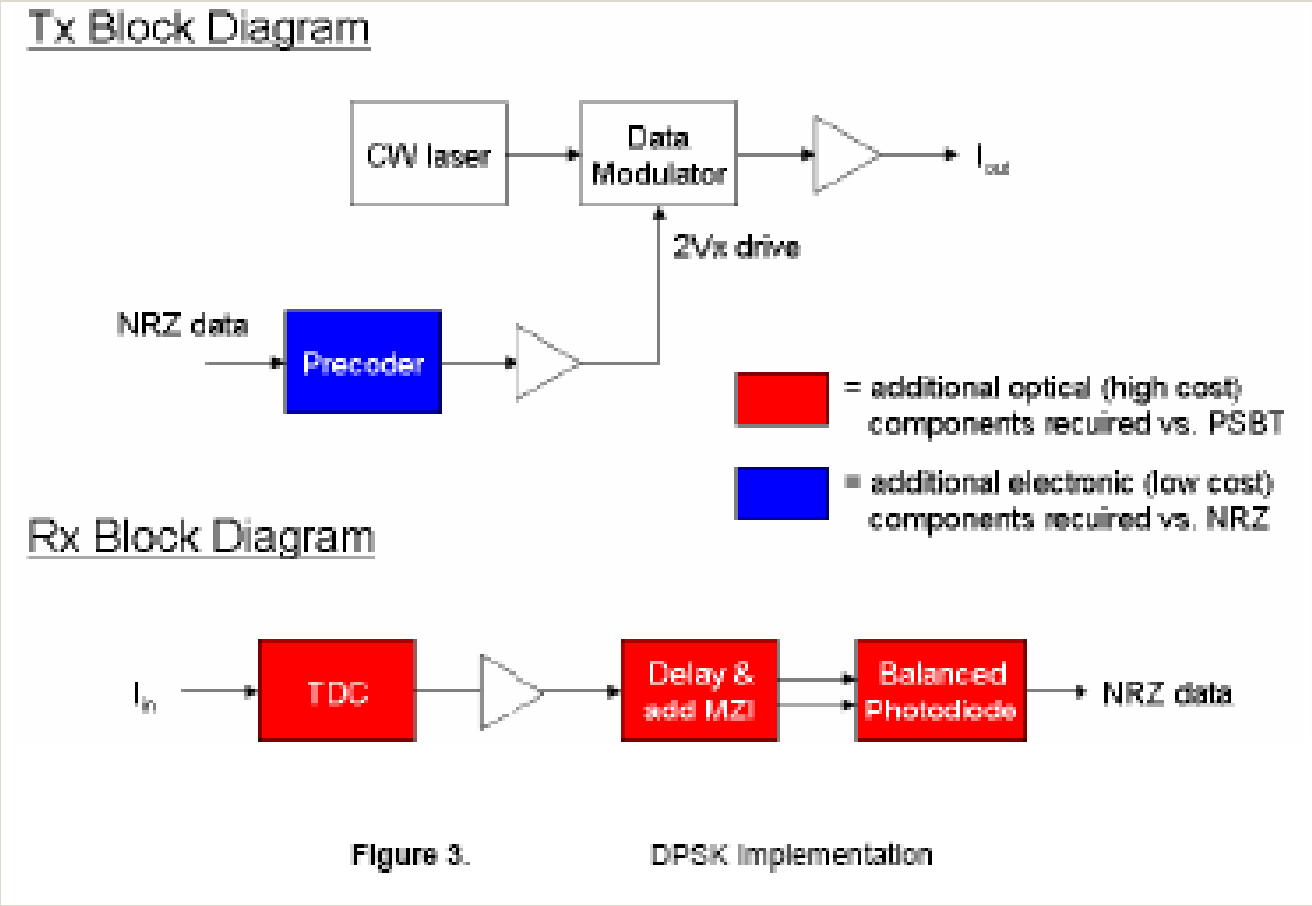

Figure 3. DPSK Implementation

Direct detectio n

40 Gb/s
COMPARISON

Comparison of duo-binary and differential phase shift keying modulation with NRZ OOK

	DUO-BINARY	DPSK
OSNR	-	++
CD Tolerance	++	+
PMD Tolerance	Similar	+
Nonlinearity	Similar	+
Cost and complexity	similar	-
Reach	600km	1500km

BEYOND 40G
100 Gb/s

- Client is 100 Gb/s Ethernet; standardisation not complete
- Plenty of ideas but no consensus on best approach
- Compatibility on with current systems preferred
- Field trials initiating
- 100 Gb/s WILL arrive – one example (Stratalight)

Polarisation multiplexed QPSK

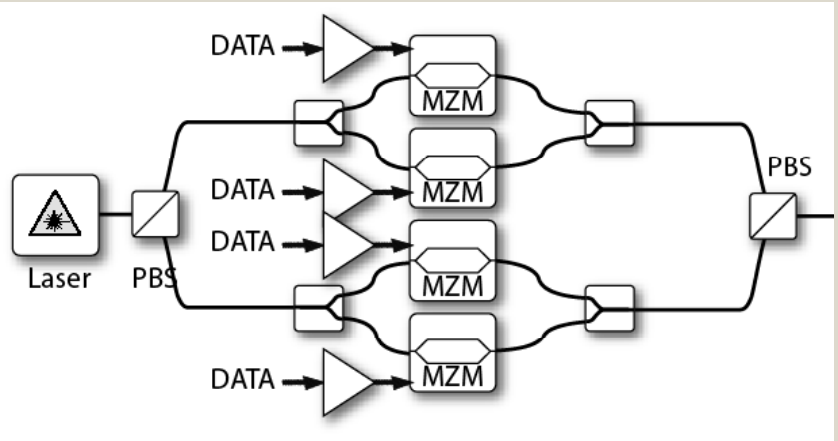

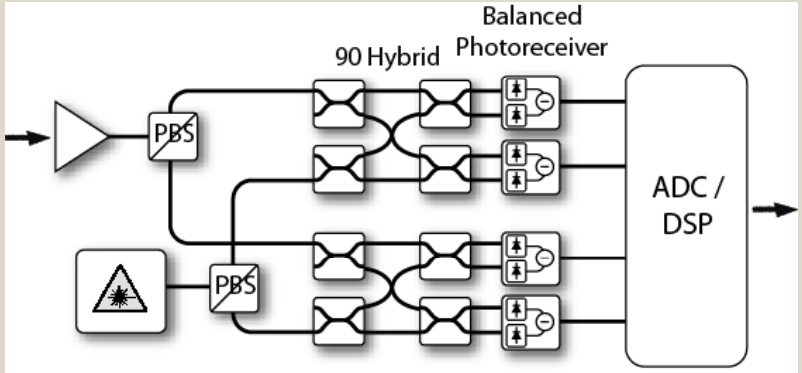

OPTICAL SWITCHING

EVOLUTION NOT REVOLUTION

Cable&Wireless

OPTICAL ADD/DROP MULTIPLEXING

- Move from point-point links to optical add-drop nodes (OADM) reduces electrical regeneration (O-E-O)

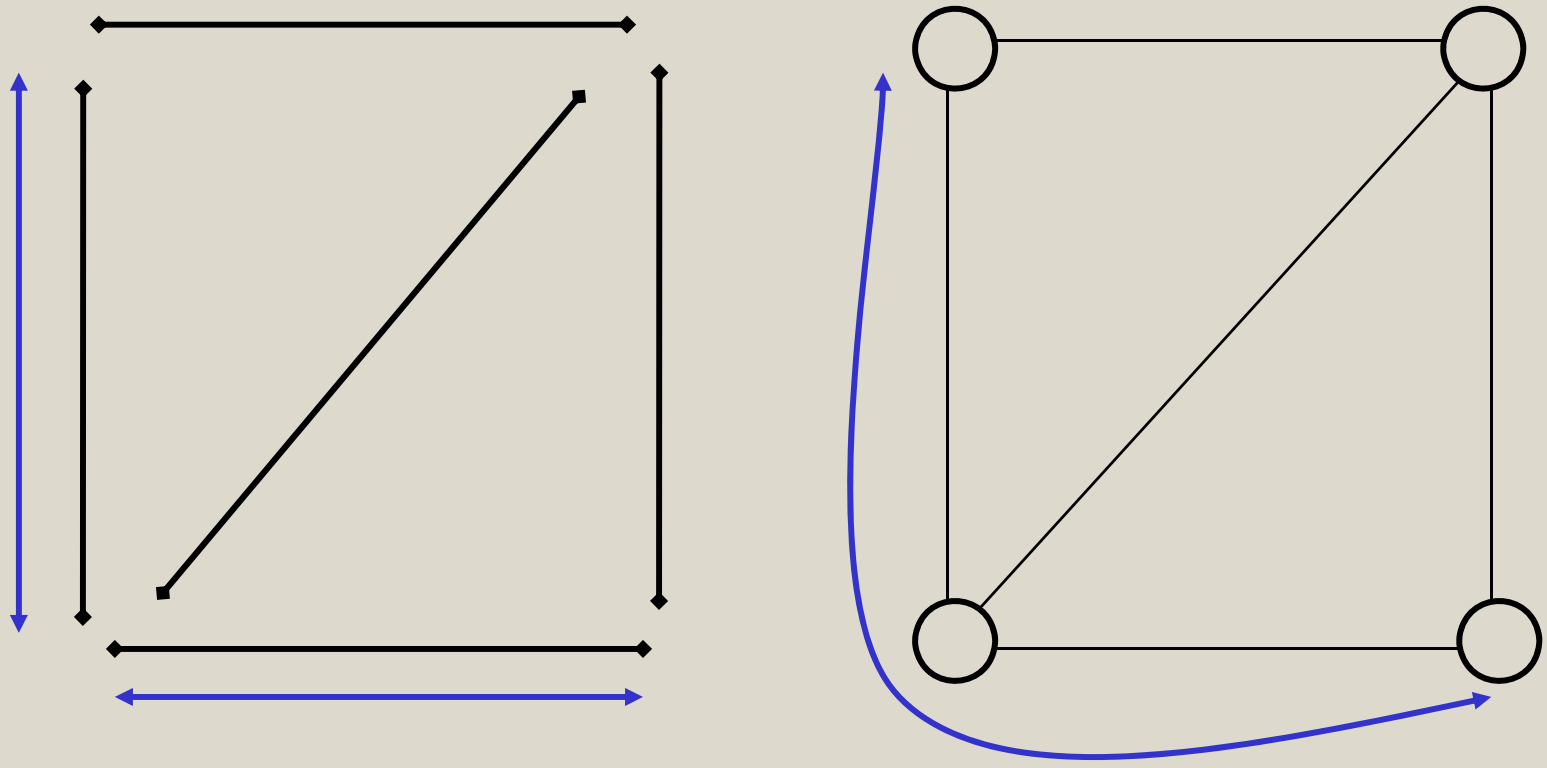

RECONFIGURABLE OADM – 1st GENERATION

Programmable blocker enables reconfiguration of wavelengths

Blocker technology mature (LCD, 2D-MEMS)

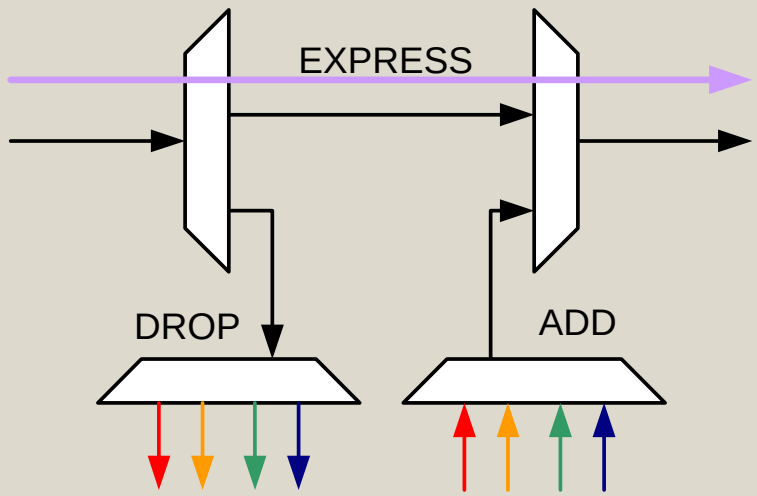

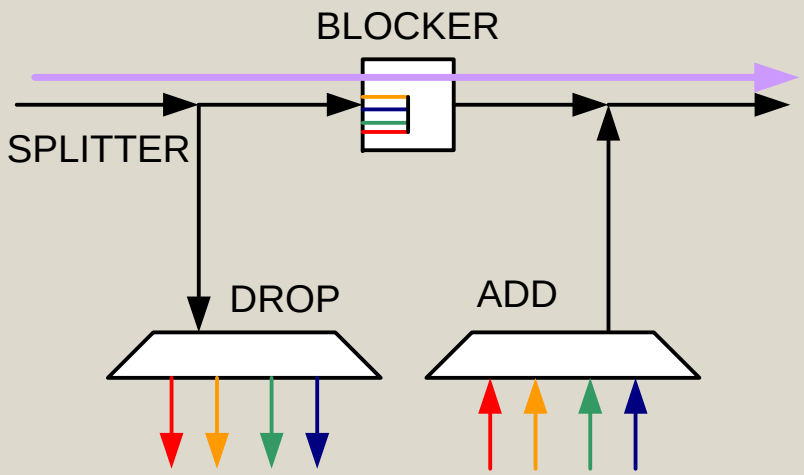

MEMS: Micro electro-mechanical systems

BLOCKER SCALABILITY PROBLEM

Number of blockers per DWDM direction (degree) increases as n^2-n, so impractical beyond 3 directions

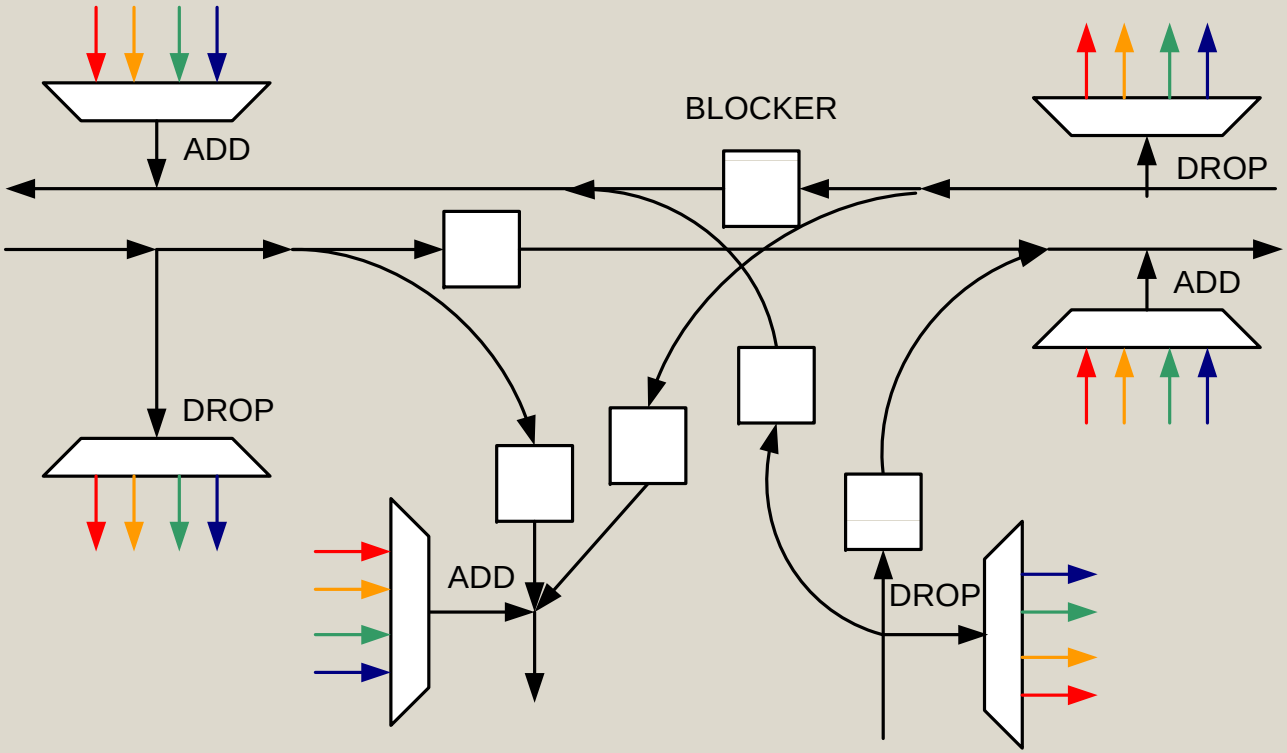

WAVELENGTH SELECTIVE SWITCH (WSS)

- WSS scales linearly with number of directions
- 100GHz/40 channel WSS being deployed for 3 and 4 degree nodes, 50GHz target.
- 9 output ports typical
- 3D MEMS (JDSU…)

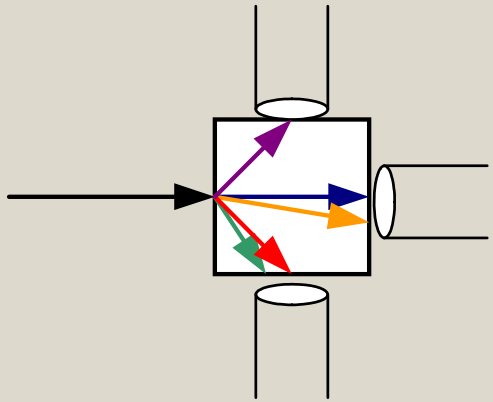

WAVELENGTH SELECTIVE SWITCH

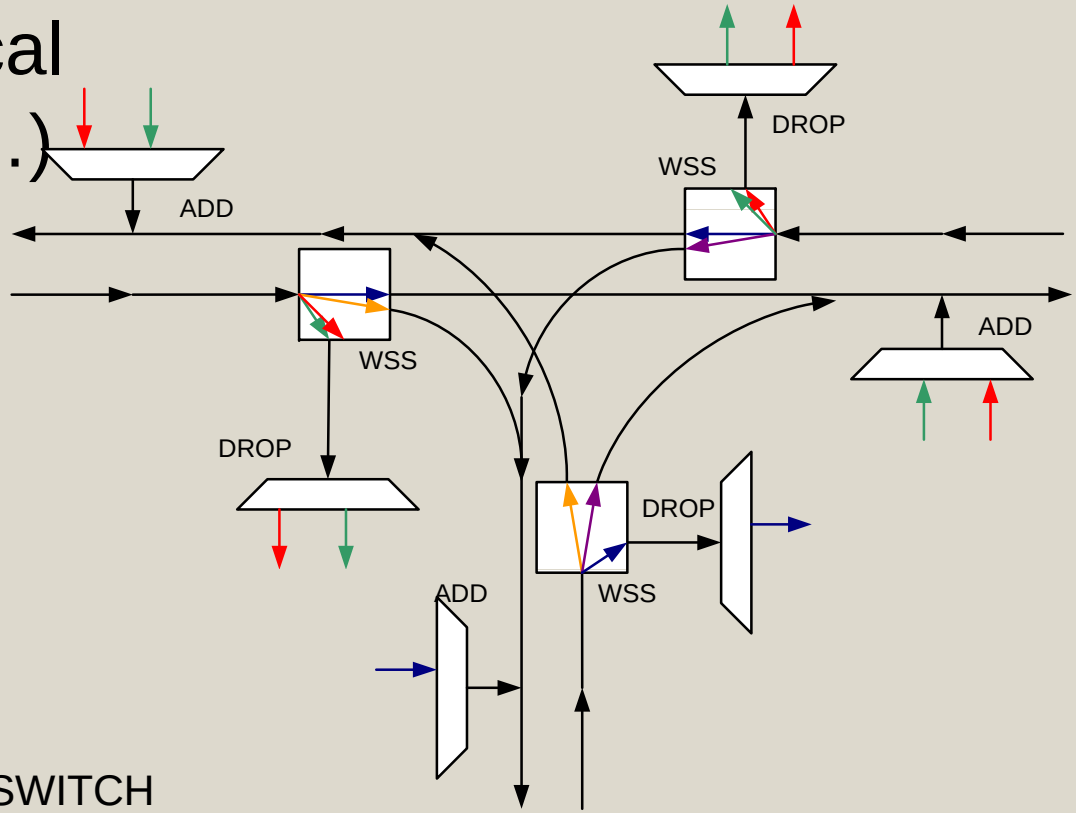

SUMMARY
THANK YOU!

- 10Gb/s very mature
- 40Gb/s ready for deployment
- 100Gb/s has no industry consensus at present
- Development of WSS enable flexible, reconfigurable networks
- In the next 3 years general deployment 2 Tb/s meshed optical networks

-> an exciting prospect for optical carrier networks!