JTAG-based Remote Configuration of FPGAs over Optical Fibers

Binwei Deng,[a,b] Chonghan Liu,[b] Jinghong Chen,[c,g] Datao Gong,[b] Di Guo,[d,b] Suen Hou,[e] Deping Huang[c,g], Xiaoting Li,[f,b] Tiankuan Liu[b,*] Ping-Kun Teng,[e] Annie C. Xiang,[b] Yang You[c], Jingbo Ye[b]

[a] *Hubei Polytechnic University, Huangshi, Hubei 435003, P. R. China*
[b] *Department of Physics, Southern Methodist University, Dallas, TX 75275, USA*
[c] *Department of Electrical Engineering, Southern Methodist University, Dallas, TX 75275, USA*
[d] *University of Science and Technology of China, Hefei, Anhui 230026, P. R. China*
[e] *Institute of Physics, Academia Sinica, Nangang 11529, Taipei, Taiwan*
[f] *Central China Normal University, Wuhan, Hubei 430079, P.R. China*
[g] *Department of Electrical and Computer Engineering, University of Arizona, Tucson, AZ 85721, USA*
E-mail: tliu@mail.smu.edu

Introduction

- The ATLAS Liquid Argon Calorimeter (LAr) Phase-1 trigger upgrade [1] has been proposed to enhance the physics reach of the ATLAS experiment.
- A LAr Trigger Digitizer Board (LTDB) is being developed to read out up to 320 detector channels and transmit all the data off the detector through 40 optical fibers.
- The LTDB, after installed, will operate in a harsh radiation environment [2-3].
- The LTDB be implemented in radiation-tolerant components such as ASICs.
- The LTDB prototype, called the Demonstrator, based on gigabit-transceiver-embedded FPGAs is being developed to test and demonstrate the functions of the LTDB.
- The FPGAs need to be configured after each power cycle or after a single-event functional interrupts (SEFI) occurs during operation.
- The distance between the Demonstrator and the counting room is about 70 meters.
- The commonly used FPGA configuration methods such as JTAG cannot support such a distance.
- It is critical to develop a remote FPGA configuration method.

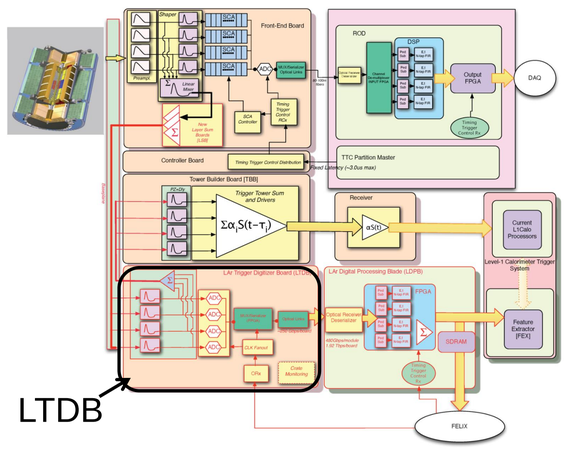

Design and Verification

- A remote FPGA configuration method based on JTAG extension over optical fibers has been developed.
- The simplest way to extend JTAG signals is to use one fiber for each JTAG signal. Since the JTAG interface has at least four signals in two directions, we need four optical fibers. Moreover, JTAG signals are not DC balanced and not suitable to be transmitted directly through optical fibers.
- We have proposed to multiplex all signals in one direction by using a serializer/deserializer and transmit through a single fiber. We only need two fibers. Moreover, the signals are encoded.
- As a backup solution, we use a flash memory with the SPI interface on the Demonstrator. The FPGA can be configured from the flash memory locally and quickly. We use one extra parallel data signal of the serializer/deserializer, which has 16 input signals and 16 output signals, to initiate the local configuration. The flash memory can also be remotely configured via the FPGA.
- Our method combines the advantages of slow remote configuration and fast local configuration.
- The method takes advantage of commercial components and ready-to-use software such as iMPACT and does not require any hardware or software development.
- The remote FPGA configuration method has been verified.
- Due to the latency of long fibers, the clock frequency of the remote configuration needs to be slower to 750 kHz.

The block diagram of remote configuration on LTDB demonstrator

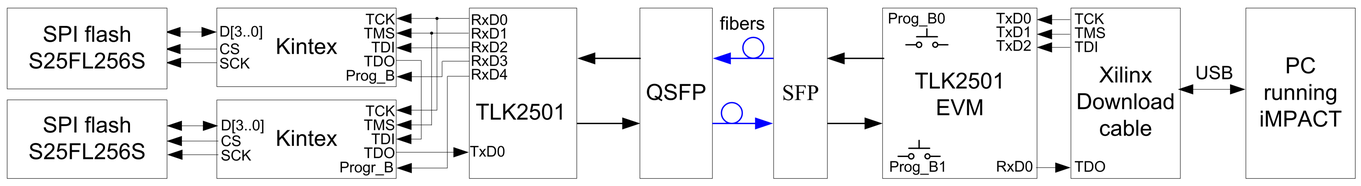

A picture of the lab verification

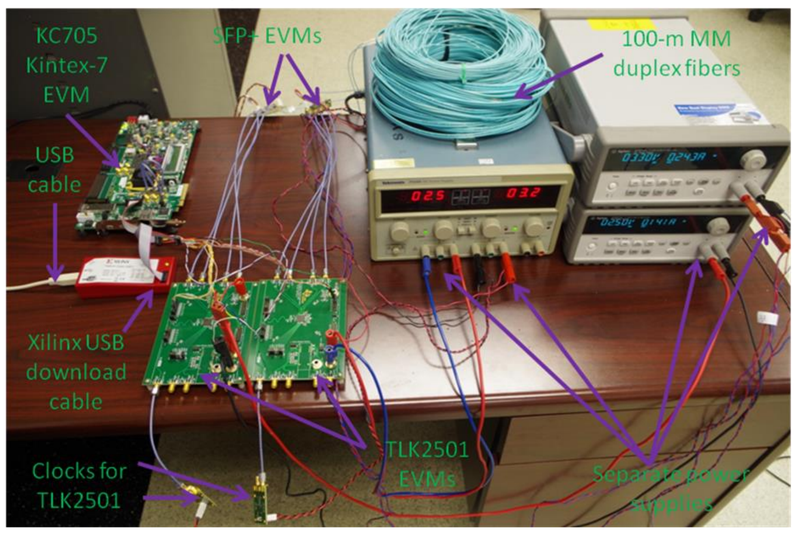

Radiation Tolerance Qualification

- The Demonstrator will operate at low luminosity for one to three years (2015-2017).
- All components have been tested in a neutron (max 800 MeV) or 200-MeV proton beam for SEE and in X-rays or ^{60}Co gamma rays for TID.
- The test results show that all components meet the radiation tolerance requirements for the Demonstrator.

The estimated radiation level at the ATLAS LAr (including safety factors) in three-year operation

TID	9 krad(SiO2)
NIEL	1.6×10^{12} (1-MeV equ. neutron)/cm^2
SEE	2.27×10^{11} (>20 MeV hadron)/cm^2

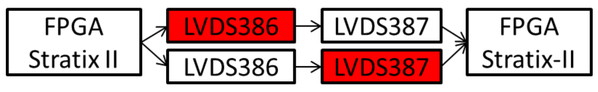

The SEE test setup of Level translators

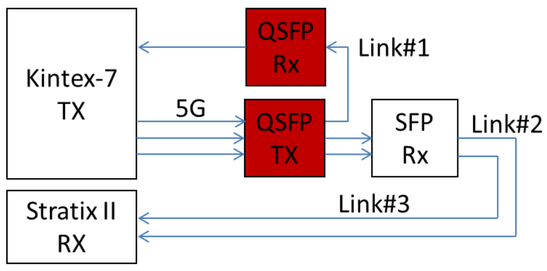

The SEE test setup of QSFP

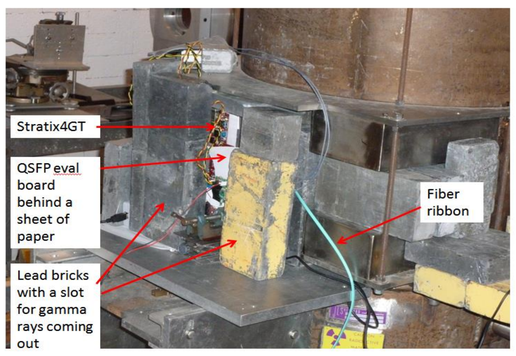

The picture of the TID test setup of QSFP

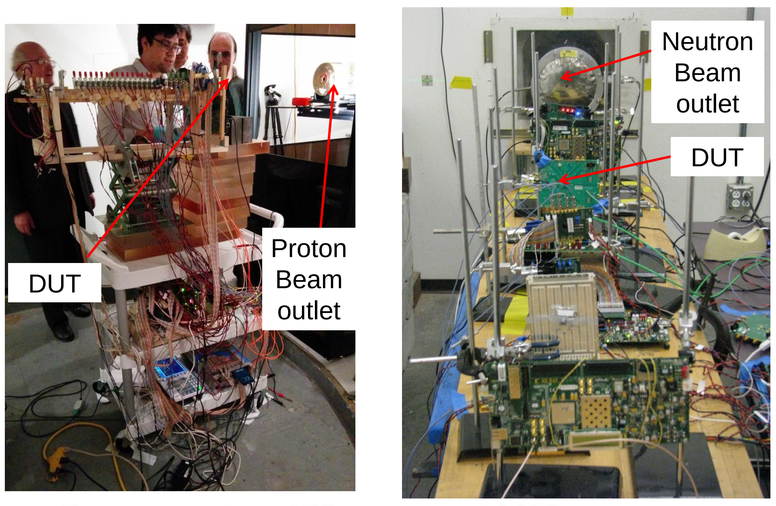

The pictures of the SEE test setup of QSFP and translators

The SEE test result summary

Device	Rad type	Non-SEFI SEU		SEFI	
		σ (cm^2)	Est. err rate (1/yr)	σ (cm^2)	Est. err rate (1/yr)
AFBR-79EIDZ RX	Proton	<1.3E-11	<1.0	<1.3E-11	<1.0
	Neutron	<2.3E-11	<1.8	<2.3E-11	<2.0
TLK2501 [3]	Neutron	1.1E-11	0.83	8.0E-12	0.61
SN75LVDS386	Neutron	<8.2E-12	<0.62	<8.2E-12	<0.62
SN75LVDS387	Neutron	<8.1E-12	<0.62	<8.1E-12	<0.62
S25FL256S	Proton	<3.3E-12	<0.23	<3.3E-12	<0.23

The TID test result summary

Device	Rad	Dose Rate (krad/hr)	TID (krad)	Degra-dation	Max Icc change
AFBR-79EIDZ	X-ray	5.1	8.1	No	N/A
TLK2501 [3]	X-ray	N/A	130	No	150%
SN75LVDS386	X-ray	433	10	No	-8.3%
SN75LVDS387	X-ray	433	21	No	12%
S25FL256S	Proton	183	18.5	No	1%

Conclusion

- We present a remote FPGA-configuration method based on JTAG extension over optical fibers. The method will be used in the ATLAS liquid argon calorimeter upgrade Demonstrator.
- We have verified that we can successfully configure an FPGA through two 100-meter optical fibers.
- All components on the FPGA side are verified to meet the radiation tolerance requirements.

Acknowledgments

The authors would like to express the deepest appreciation to Ms. Tanya Herrera, Dr. Steve Wender, and Dr. Ron Nelson, Dr. Hucheng Cheng, Dr. James Kierstead, and Dr. Helio Takai, Dr. Mike Wirthlin for beneficial discussions and kindly help during the irradiation tests.

References

[1] ATLAS Collaboration, *ATLAS liquid argon calorimeter Phase-I upgrade technical design report*, ATLAS-TDR-022, September 20, 2013.
[2] Martin Dentan, "ATLAS policy on radiation tolerant electronics," *ATLAS Project Document No. ATC-TE-QA-0001 (Rev 2)*, 21 July 2000.
[3] P. Moreira et al, "A radiation tolerant gigabit serializer for LHC data transmission," 7th Workshop on Electronics for LHC Experiments, Stockholm, Sweden, 10 - 14 Sep 2001.

TWEPP 2014 - Topical Workshop on Electronics for Particle Physics, September 22-26, 2014, Centre des Congrès - Aix en Provence, France