First charge identification analysis with the ΔE-TOF detector prototype for the FOOT experiment

G. Battistoni, N. Belcari, S. Bianucci,
N. Camarlinghi, P. Carra, E. Ciarrocchi, A. Del Guerra, P. De Maria,
M. Francesconi, L. Galli, A. C. Kraan, A. Moggi, M. Morrocchi, S.
Muraro, M. Pullia, F. Raffaelli, V. Rosso, G. Sportelli, M. G. Bisogni

Aafke Kraan, INFN Pisa
On behalf of the FOOT collaboration

VCI VIENNA CONFERENCE ON INSTRUMENTATION
15TH VIENNA CONFERENCE ON INSTRUMENTATION

FOOT

INFN PISA
Istituto Nazionale di Fisica Nucleare
Sezione di Pisa

IN SUPREMÆ DIGNITATIS 1343
UNIVERSITÀ DI PISA

fondazione CNAO
Centro Nazionale di Adroterapia Oncologica

Outline

- **Introduction**
- **The FOOT detector**
- **The ΔE-TOF detector prototype**
- **Results**
- **Conclusions and future plans**

Introduction

FOOT (FragmentatiOn Of Target) experiment:
an applied nuclear physics experiment relevant in two fields:

Hadron therapy

- Cancer treatment with ion beams (carbon, protons)
  - The depth-dose profile of charged particles is particularly useful
  - Charged particles undergo **nuclear interactions** within the human body →fragments
- Radiobiology request: more precise Treatment Planning System (TPS) including fragments
- p, C beams (He, O)
- Energies: up to 250 MeV (p), 400 MeV/u (C)

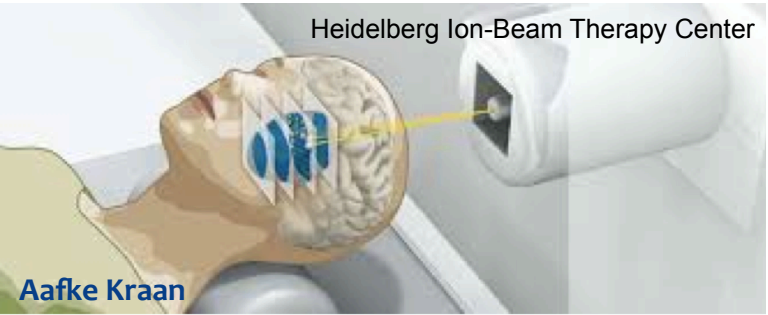

Radioprotection in space

- Detailed knowledge of the fragmentation processes to optimize the spacecraft shielding (long term mission)
- p, He, Li, C, O beams
- Radioprotection energies (up to around 800 MeV/u)

Introduction

FOOT (FragmentatiOn Of Target) experiment:
an applied nuclear physics experiment relevant in two fields:

Hadron therapy

TODAY'S FOCUS

- Cancer treatment with ion bea[illegible]n, protons)
  - The depth-dose profile of charged particles is particularly useful
  - Charged particles undergo **nuclear interactions** within the human body →fragments
- Radiobiology request: more precise Treatment Planning System (TPS) including fragments
- p, C beams (He, O)
- Energies: up to 250 MeV (p), 400 MeV/u (C)

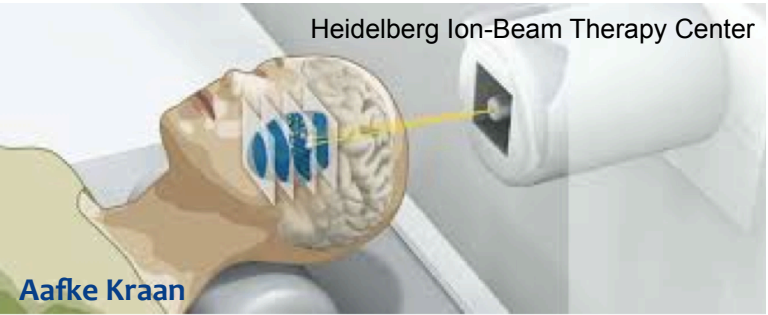

Radioprotection in space

- Detailed knowledge of the fragmentation processes to optimize the spacecraft shielding (long term mission)
- p, He, Li, C, O beams
- Radioprotection energies (up to around 800 MeV/u)

Introduction

Main goal of FOOT (**F**ragmentati**O**n **O**f **T**arget) experiment for hadron therapy:

To identify the **fragments** produced in the **human body** during particle irradiation and to measure their production cross-section

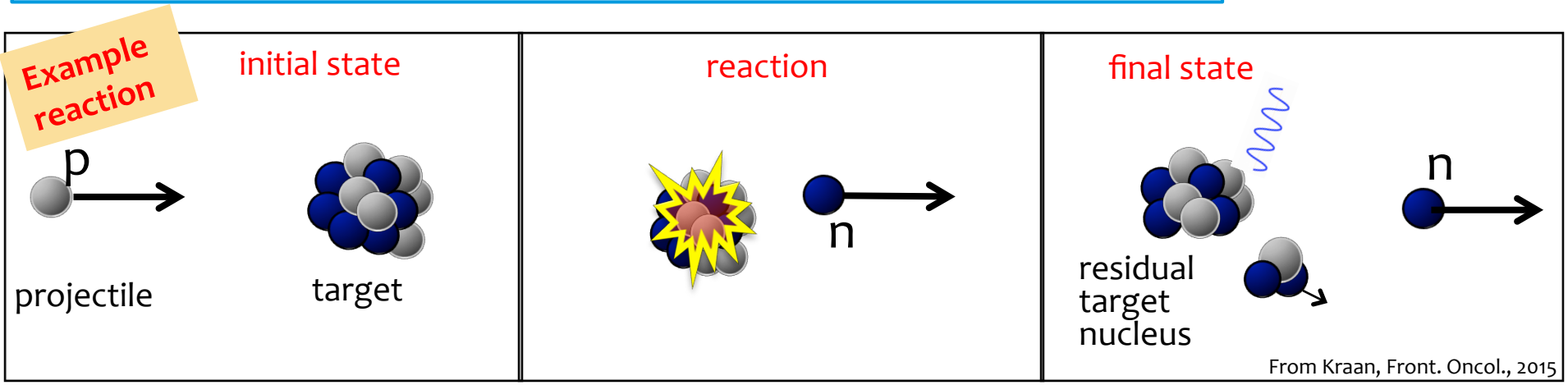

From Kraan, Front. Oncol., 2015

What kind of fragments?

- Many different types… …
- Energy up to tens of MeV
- These fragments can damage healthy tissue
- New generation treatment planning systems request radio-biological effects to be included!

^{15}O, ^{15}N, ^{14}N, ^{13}C, ^{12}C, ^{11}C, ^{10}B, ^{8}Be, ^{6}Li, ^{4}Be, ^{4}He, ^{3}He, ^{3}H, ^{2}H, ^{1}H, pions, …

See for instance: Tommasino & Durante, Cancers 2015,7

Introduction

Main goal of FOOT (**F**ragmentati**O**n **O**f **T**arget) experiment for hadron therapy:

To identify the **fragments** produced in the **human body** during particle irradiation and to measure their production cross-section

FramentatiOn Of Target

- Accurately measure the: charge Z, mass A, cross sections dσ/dE and dσ/dΩ in ion reactions
- **Challenge in proton therapy…** fragments have short range (tens – hundreds of μm)!
  - Thin targets? Interaction rate small and mechanically difficult
  - Solution: inverse kinematic approach: switch projectile and target role!

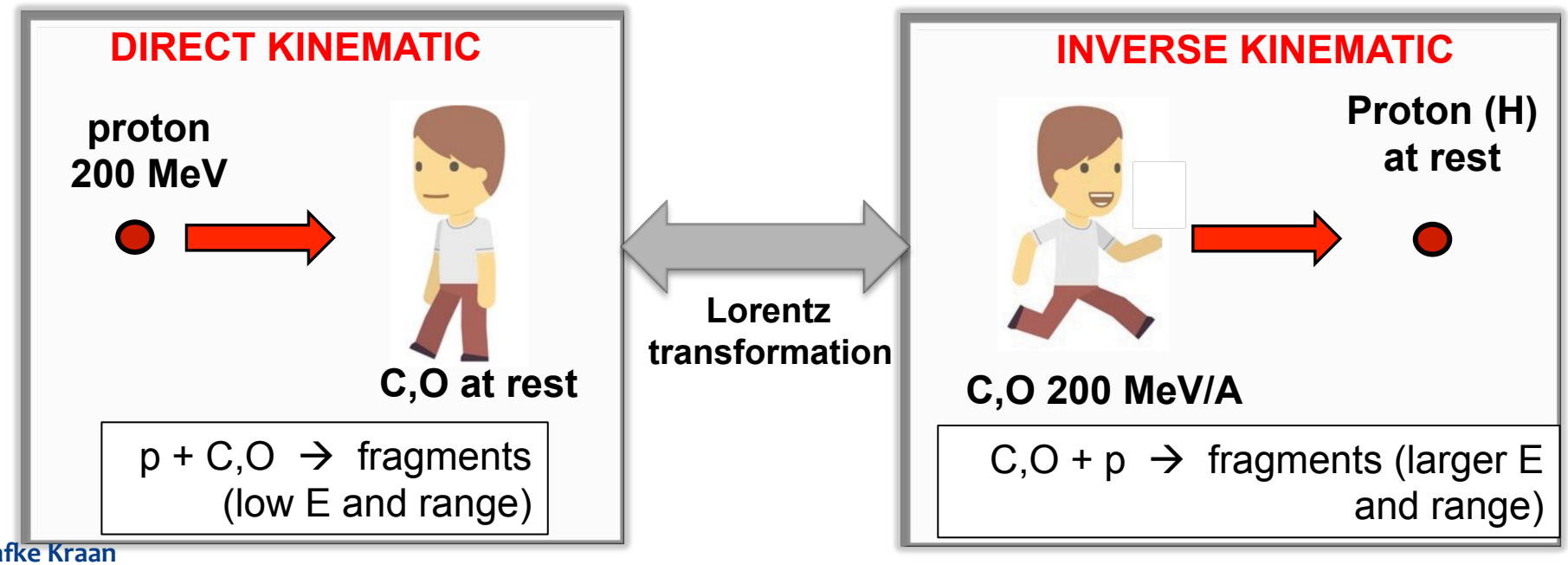

Introduction

FOOT collaboration

- Experiment funded by Italian National Institute of Nuclear Physics (INFN)
- 101 members (11 INFN sections and labs, 10 Italian universities and 10 foreign institutes)
- Prototypes tested at Centro Nazionale di Adroterapia Oncologia (**CNAO**) and Heidelberg Ion-Beam Therapy Center (**HIT**)
- Final installation at **GSI** (Helmholtz Centre for Heavy Ion Research)

TODAY: charge identification measurements (Z) using a ΔE-TOF prototype

Outline

- ✓ **Introduction**
- **The FOOT detector**
- **The ΔE-TOF detector prototype**
- **Results**
- **Conclusions and future plans**

The FOOT detector

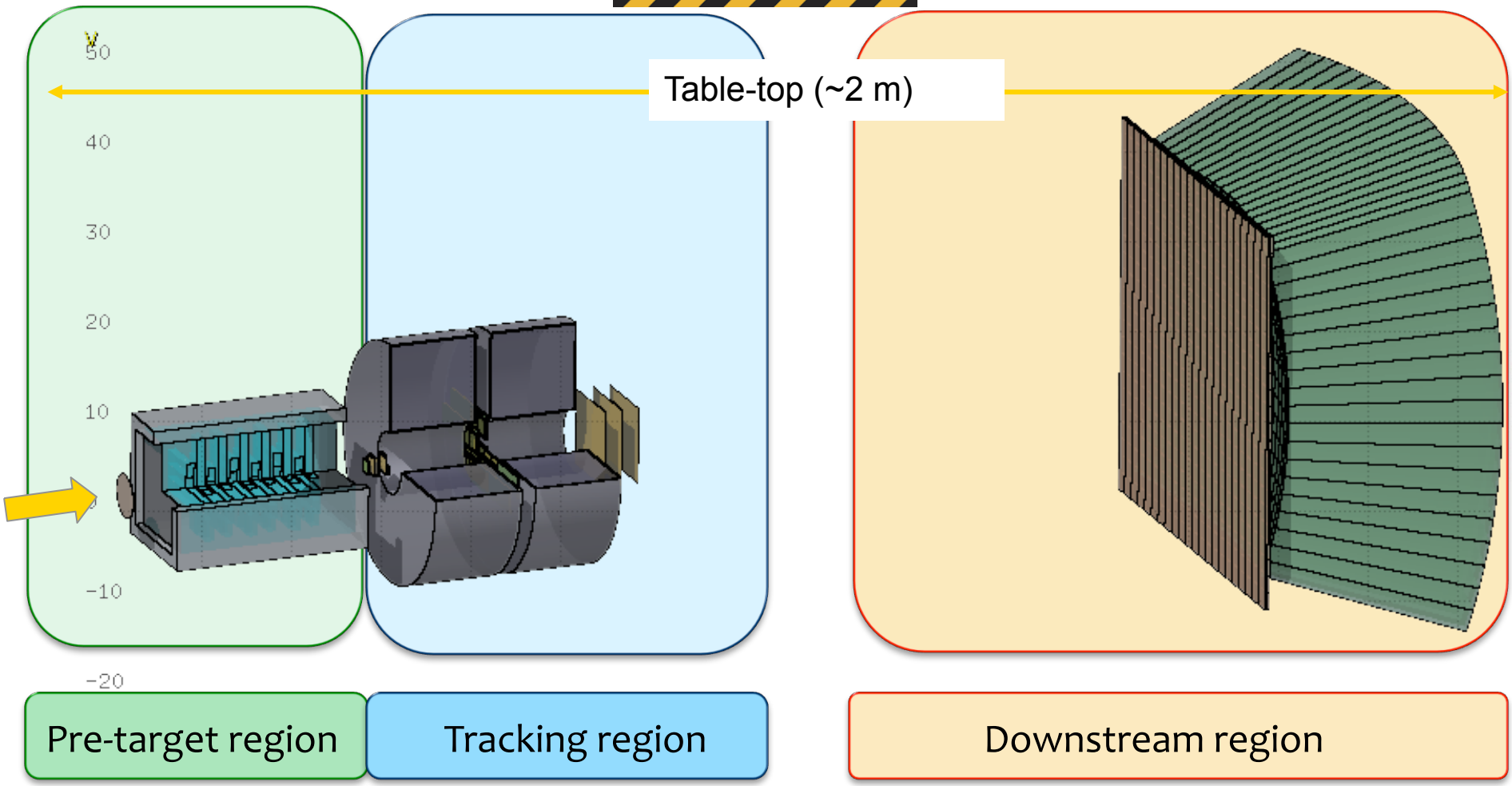

The FOOT detector

- Protons, Carbon and Oxygen
- Being tested at CNAO, Pavia (IT) and HIT, Heidelberg (D)
- Final setup at GSI

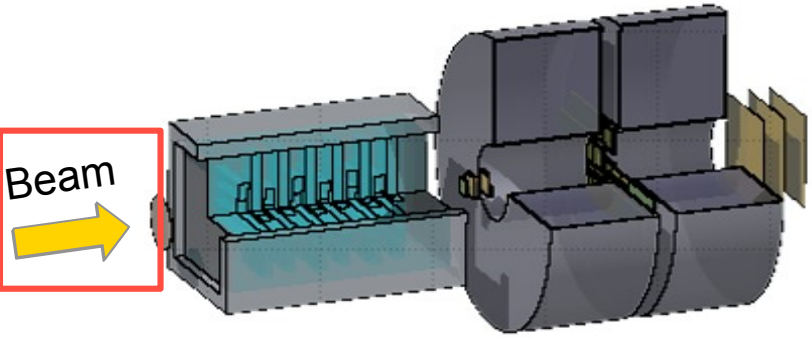

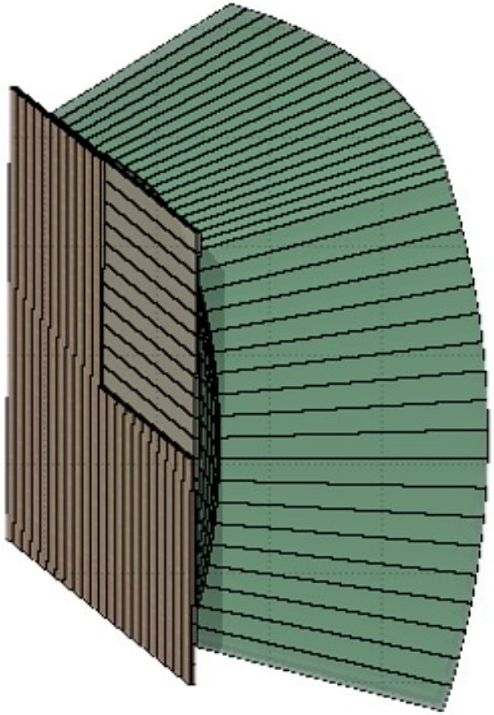

Table-top (~2 m)

FramentatiOn Of Target

The FOOT detector

- Very thin plastic scintillator with side read-out
- Beam **counter** (incoming ion flux)
- Trigger and Time-Of-Flight (**TOF**)

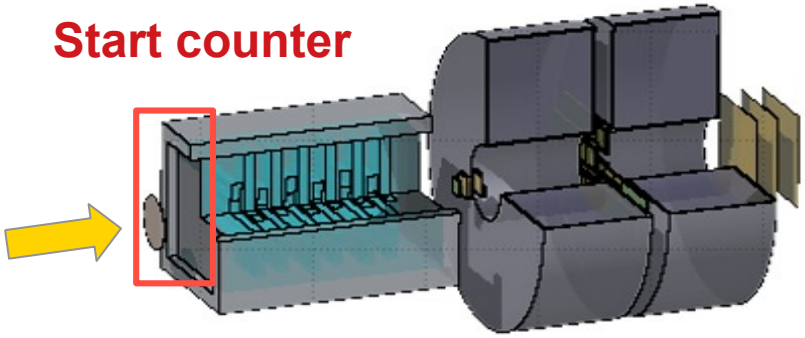

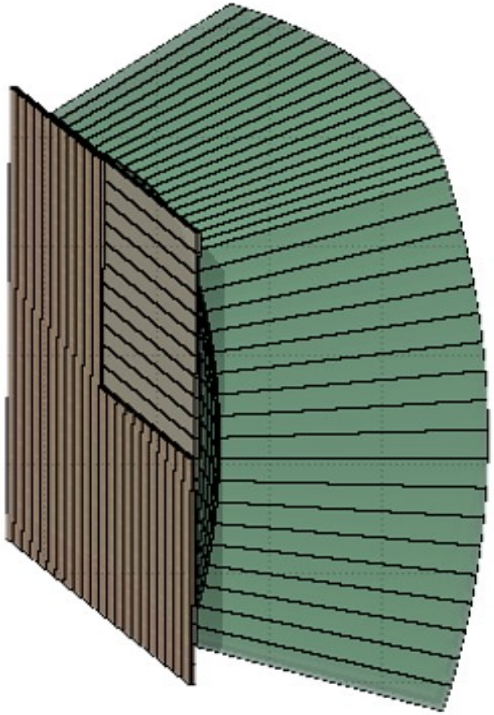

Table-top (~2 m)

FramentatiOn Of Target

The FOOT detector

- Drift chamber
- **Position and direction** of particles

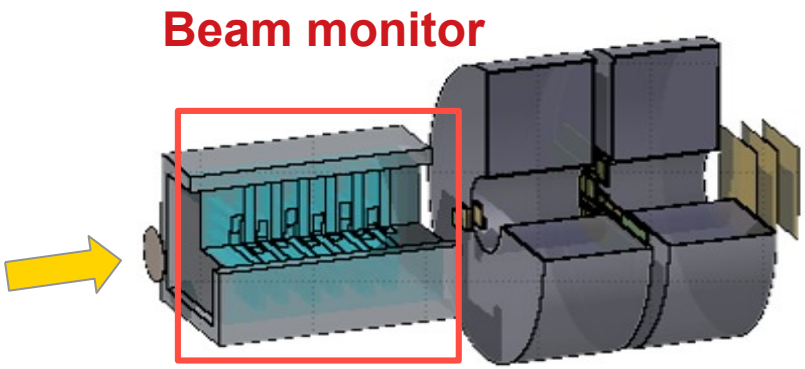

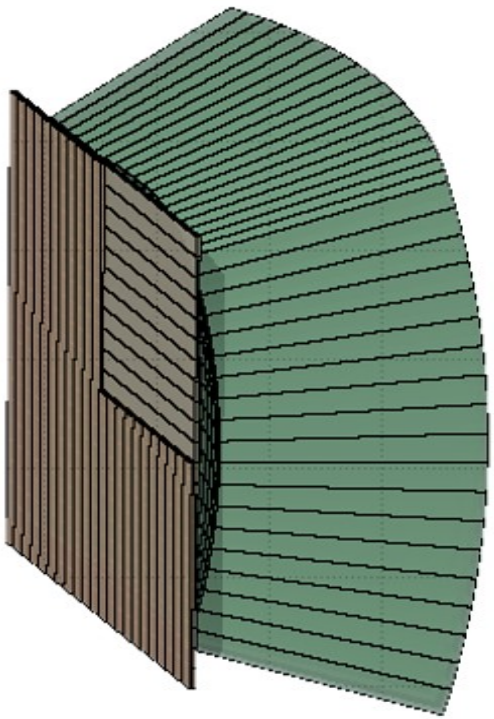

Table-top (~2 m)

FramentatiOn Of Target

The FOOT detector

- Polyethylene (C_2H_4), graphite (C) target
  - Subtraction to obtain H cross sections
- 2-4 mm thick
  - Minimize MCS and secondary fragmentation
  - Reasonable interaction rate

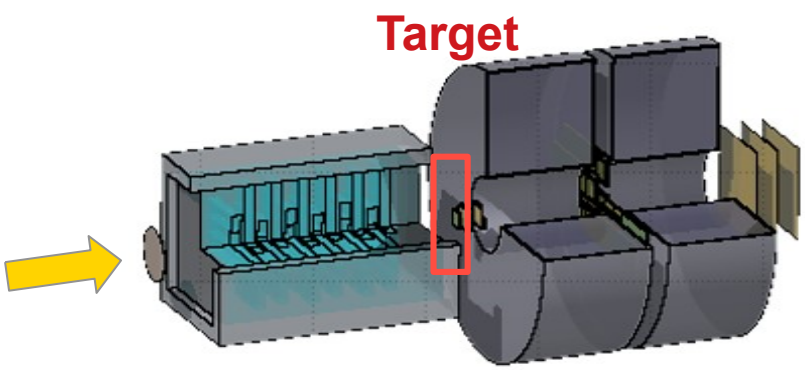

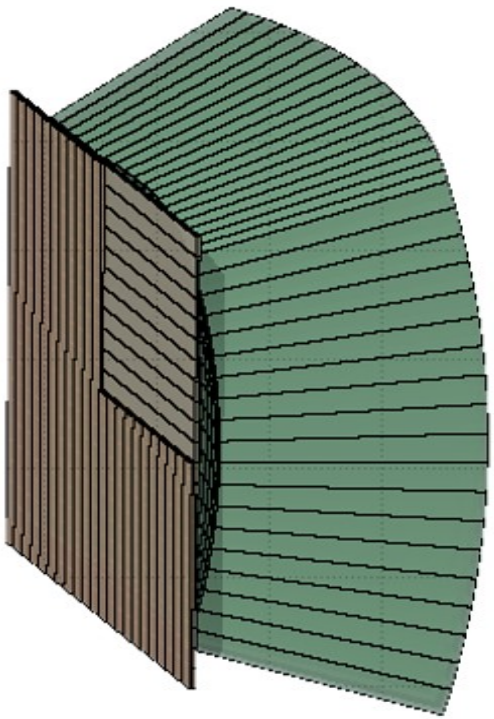

Table-top (~2 m)

FramentatiOn Of Target

The FOOT detector

- 3 silicon trackers alternated to 2 magnets: 0.9 and 1.1 T
- **Momentum** of the fragment and the **dE/dx** in the last silicon station

Magnetic spectrometer

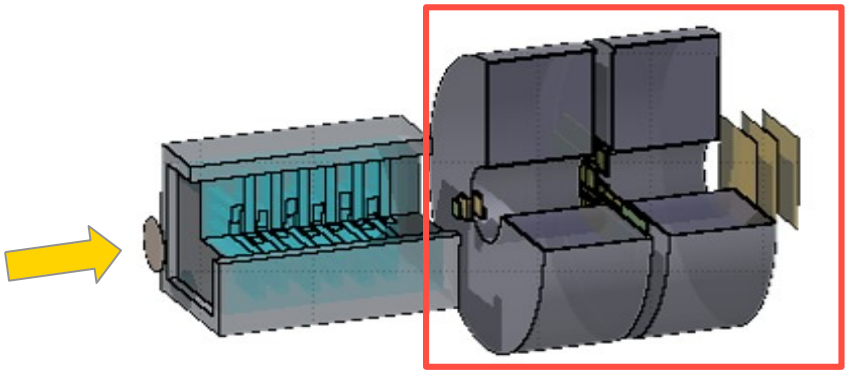

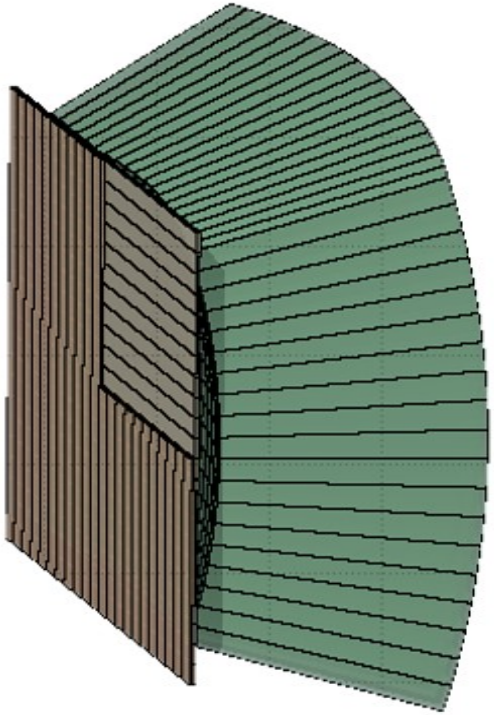

Table-top (~2 m)

FramentatiOn Of Target

The FOOT detector

- thin plastic scintillator bars with side readout
- 2 orthogonal layers
- Measures:
  - **energy deposited** in the scintillator (ΔE)
  - **TOF** of the fragments (β)
  - **Position**

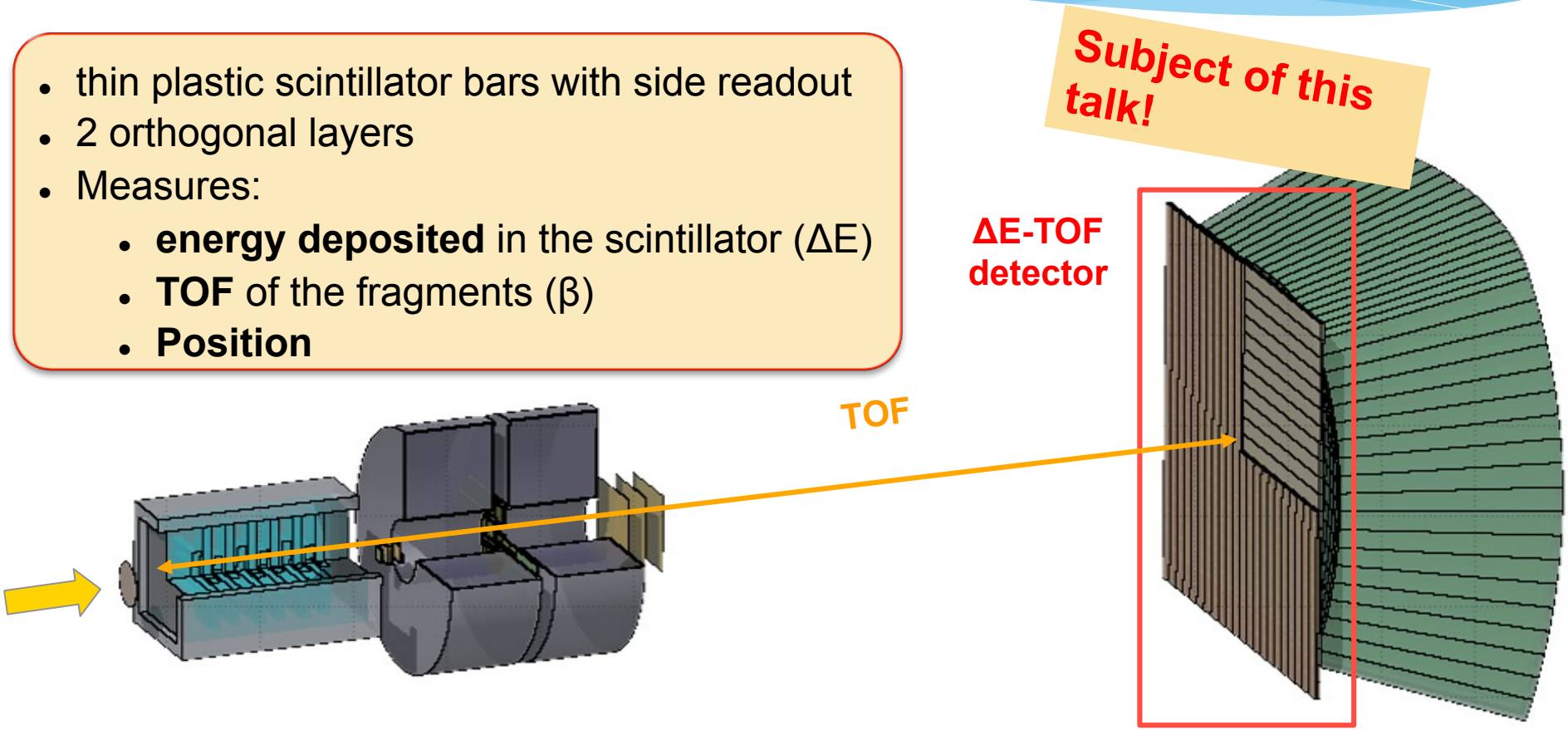

Table-top (~2 m)

FramentatiOn Of Target

The FOOT detector

- Thick BGO crystal
- **Kinetic energy** and **interaction position** of the fragments

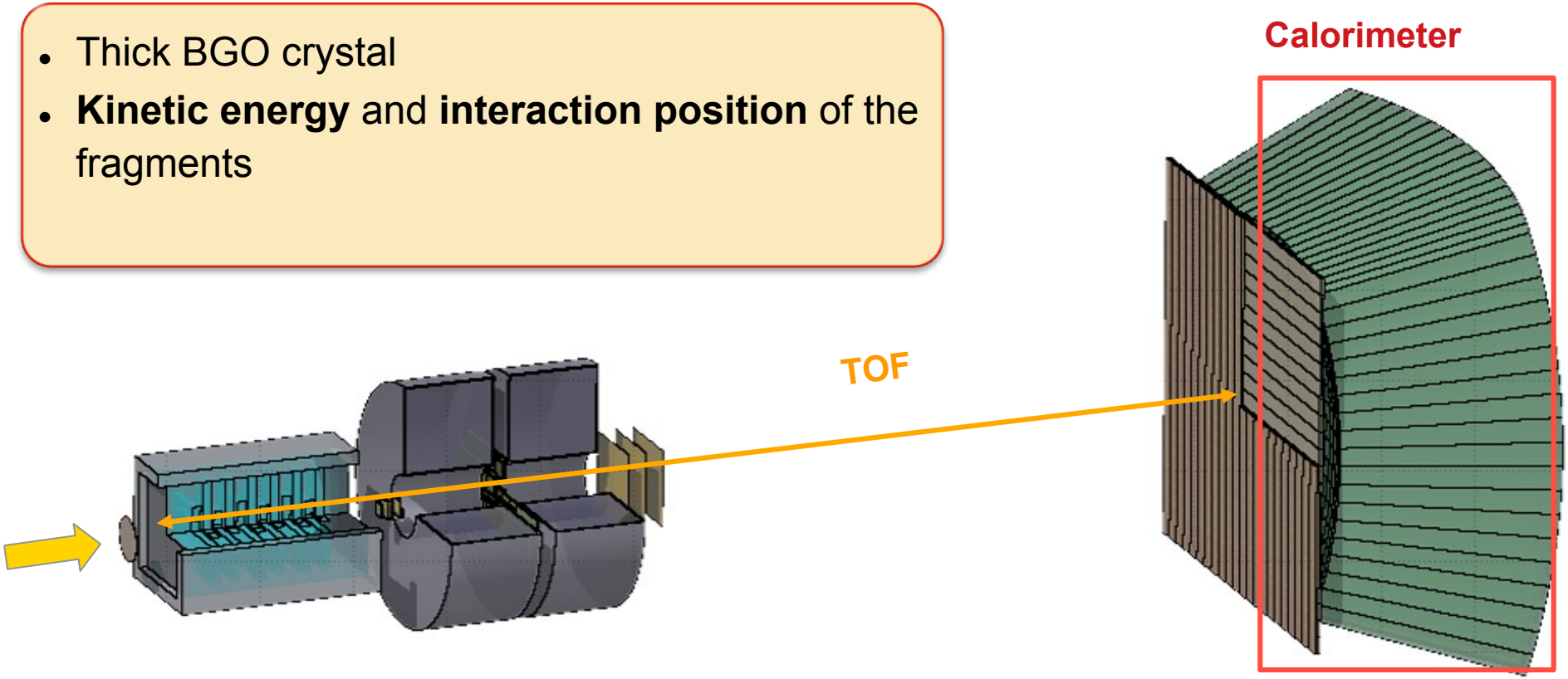

Table-top (~2 m)

FramentatiOn Of Target

The FOOT detector

Additional feature

- Lighter fragments (**Z < 3**) have wider angular aperture
- Post-target detectors replaced by **emulsion** spectrometer

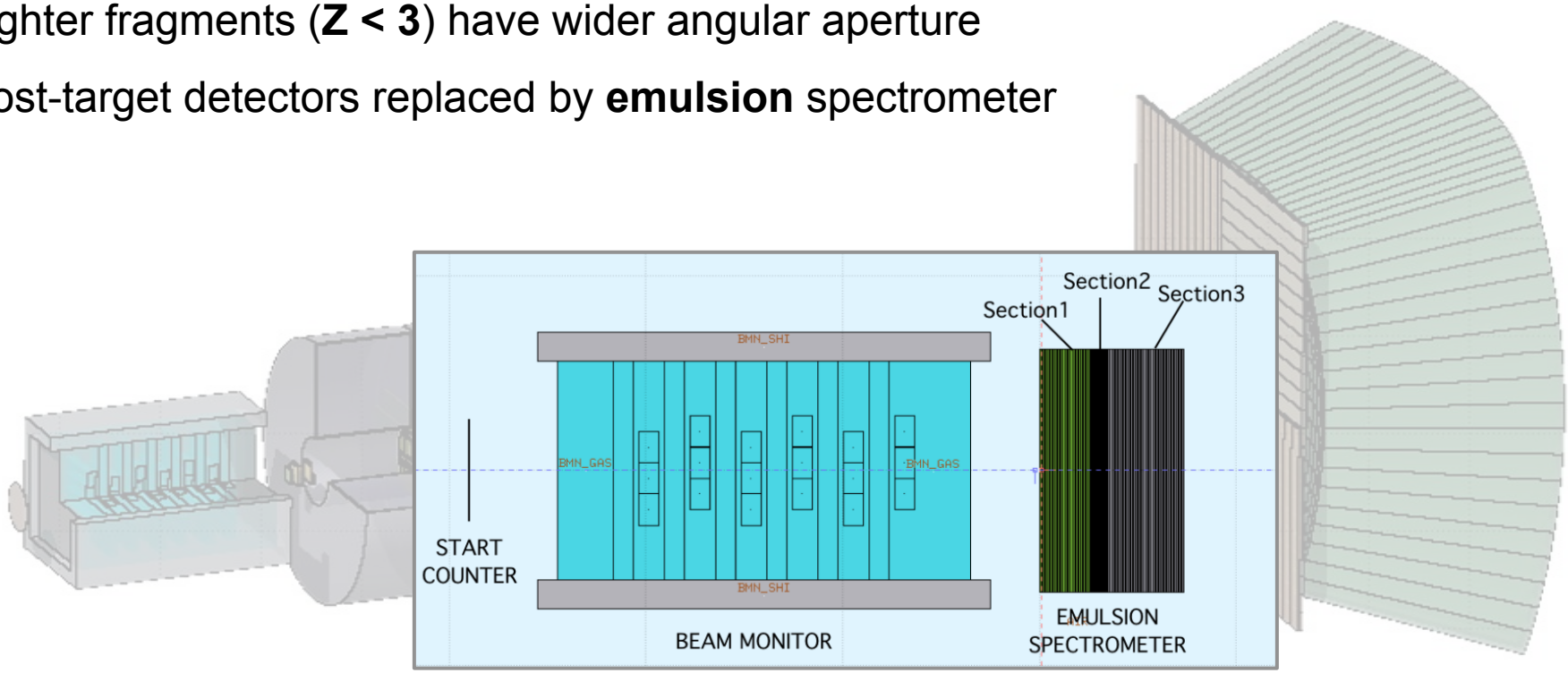

Table-top (~2 m)

FramentatiOn
Of Target

Outline

- ✓ **Introduction**
- ✓ **The FOOT detector**
- **The ΔE-Time-Of-Flight detector prototype**
- **Results**
- **Conclusions and future plans**

Z determination with the ΔE-TOF detector

- ΔE-TOF detector: based on scintillator bars

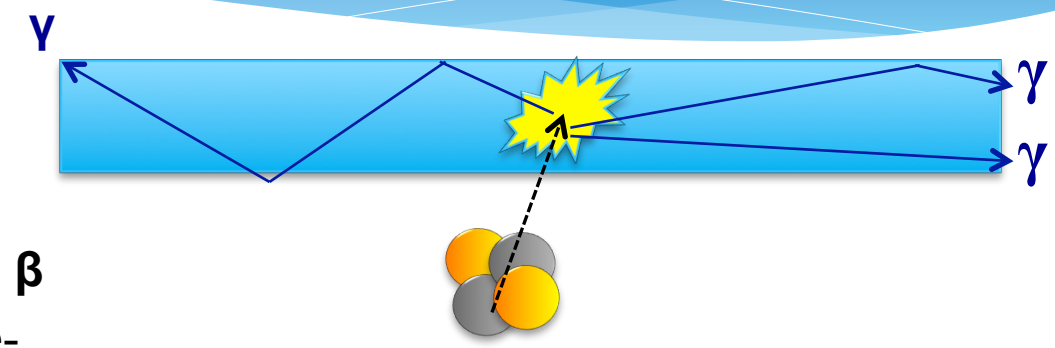

- ΔE-TOF detector provides
  - **Time-Of-Flight** of fragments → **β**
  - **Energy** deposited (from charge-energy calibration)

Bethe-Bloch (relevant terms)

$$-\frac{\Delta E}{\Delta x} = K Z_{fragment} Z^2 \frac{Z_{\text{scint}}}{A_{\text{scint}}} \frac{1}{\beta^2} [\frac{1}{2} \ln \frac{2 m_e c^2 \beta^2 \gamma^2 W_{\max}}{I^2} - \beta^2]$$

$$\rightarrow Z_{fragment} = \beta \sqrt{\frac{\Delta E}{\Delta x} \frac{1}{K \frac{Z_{\text{scint}}}{A_{\text{scint}}} [\frac{1}{2} \ln \frac{2 m_e c^2 \beta^2 \gamma^2 W_{\max}}{I^2} - \beta^2]}})$$

→**Charge Z** of fragment

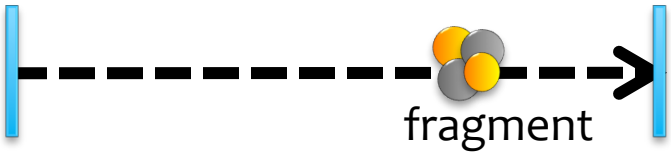

- **Position** of deposit (2D by orthogonal arrangement)

Results in this talk: with 2 single bars (without Start Counter)

The ΔE-TOF prototype

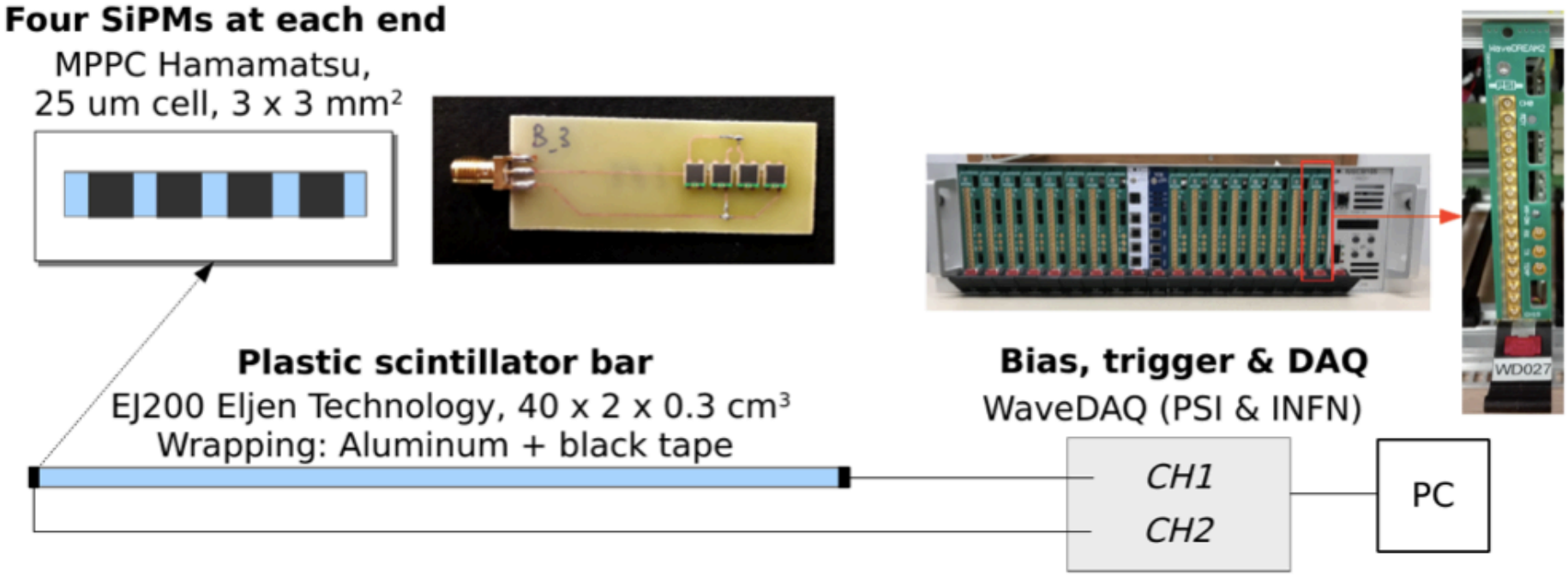

- SiPM signal amplified and sent to fast digitizer (5 Gsamples/s)
- DAQ system (WaveDAQ: PSI-INFN):
  - Based on DRS-ASIC developed at PSI for MEG (Stefan Ritt)
  - Channels from each bar connected to custom board WaveDREAM
- Connected to trigger board
- Each channel: waveform → time stamp and energy

The ΔE-TOF prototype

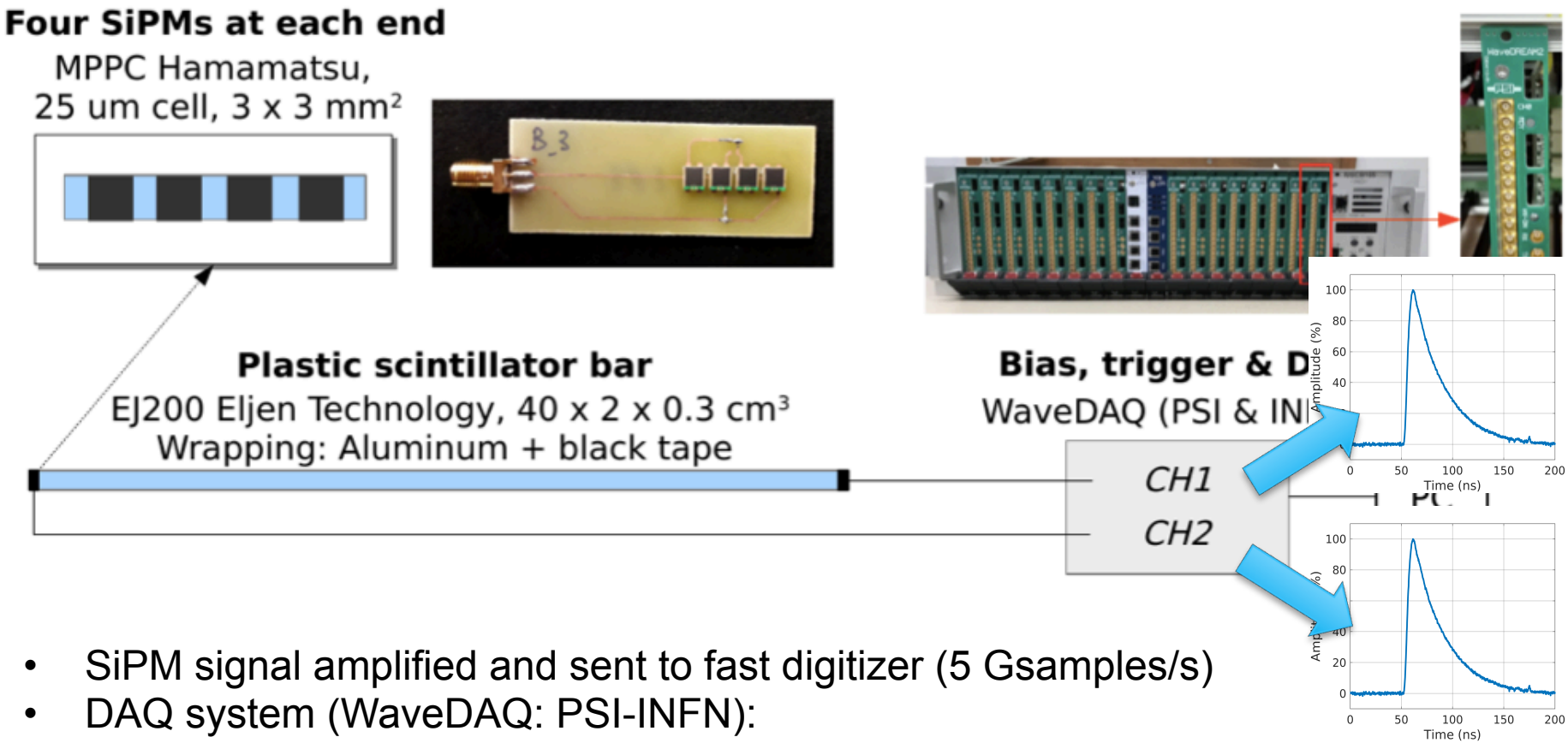

- SiPM signal amplified and sent to fast digitizer (5 Gsamples/s)
- DAQ system (WaveDAQ: PSI-INFN):
  - Based on DRS-ASIC developed at PSI for MEG (Stefan Ritt)
  - Channels from each bar connected to custom board WaveDREAM (WDB)
- Connected to trigger board
- Each channel: waveform → time stamp and energy

Experimental setups

- First tests with 2 bars only, performed at CNAO
- 2 experimental setups

Calibration measurements

- p, C beams, directly shot on bars
- Energies: up to 250 MeV/u (p) and up to 400 MeV/u (C)
- Time and energy resolution and calibration measurements
- Direct charge Z determination
- Comparison with FLUKA MC code (no detector resolution included)

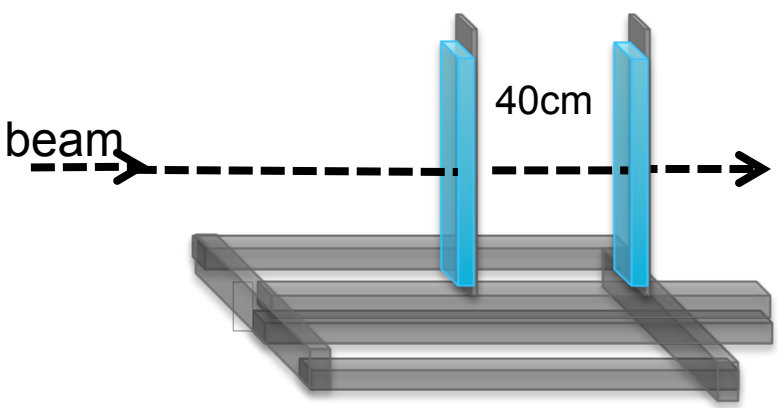

Fragmentation identification

- C beam, 330 MeV/u
- Bars at 8 degrees: no primary particles
- First fragment identification measurements
- Comparison with FLUKA MC code (no detector resolution included)

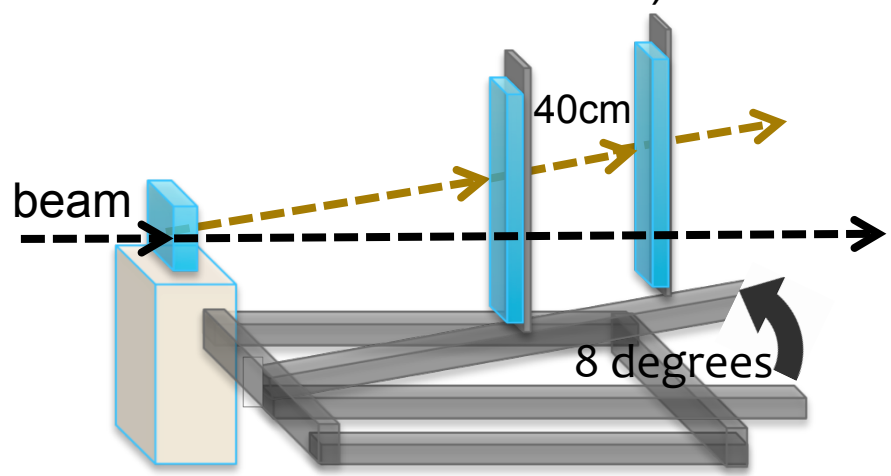

Experimental setups

- First tests with 2 bars only, performed at CNAO
- 2 experimental setups

Calibration measurements

- p, C beams, directly shot on bars
- Energies: up to 250 MeV/u (p) and up to 400 MeV/u (C)
- [illegible]
- [illegible] de (no

Mostly already presented previously:

- *E Ciarrocchi et al, 2018 NIMA DOI: 10.1016/j.nima.2018.08.117*
- *M. Morrocchi et al, 2019 NIMA DOI: 10.1016/j.nima.2018.09.086*
- *Presentation at IEEE 2018, Sydney*

New: Z-evaluation

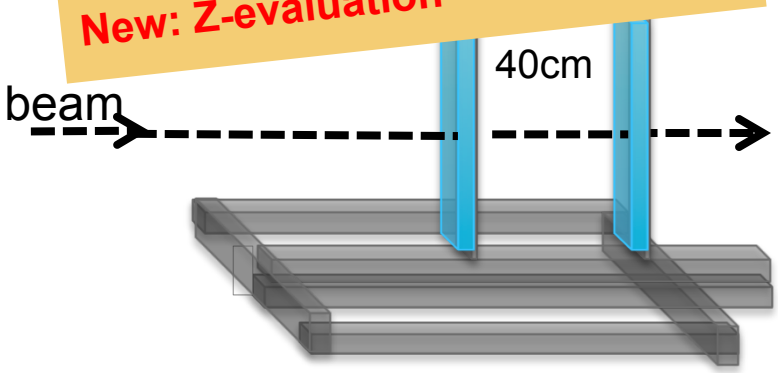

Fragmentation identification

- C beam, 330 MeV/u
- Bars at 8 degrees: no primary particles
- First fragment identif[illegible] m[illegible]
- Comparison with FLUKA MC code (no detector resolution included)

FOCUS TODAY!

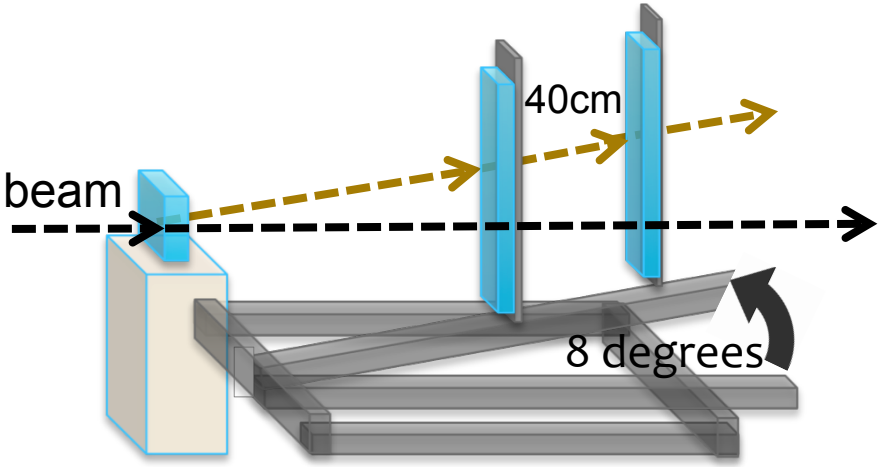

Outline

- ✓ **Introduction**
- ✓ **The FOOT detector**
- ✓ **The ΔE-TOF detector prototype**
- **Results**
- **Conclusions and future plans**

Performance

- *E Ciarrocchi et al, 2018 NIMA (in press) doi:10.1016/j.nima.2018.08.117*
- *M. Morocchi et al, 2018NIMA DOI: 10.1016/ j.nima.2018.09.086*
- *Presentation at IEEE 2018, Sydney*

Time resolution of bar:

- Protons: σ ~ 65-110 ps (60-230 MeV)
- Carbon: σ ~ 30-40 ps (115-400 MeV/u)

DATA: Waveform

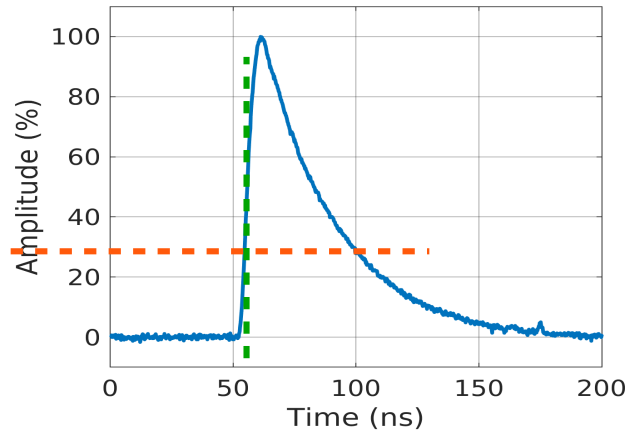

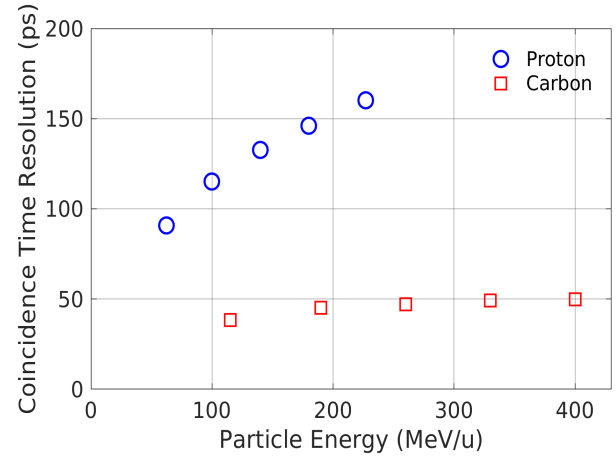

Energy calibration and resolution :

- Collected signal at each end of bar is given by the area *A* of the waveform
- Relate area A to the energy deposit using:
  - Monte Carlo (FLUKA): predicted energy deposition
  - Scintillator quenching model (Birk's)

$$A = S\frac{\Delta E}{1 + k \cdot \Delta E}$$

Energy resolution σ/μ	
Protons	6-12%
Carbon	6-8%%

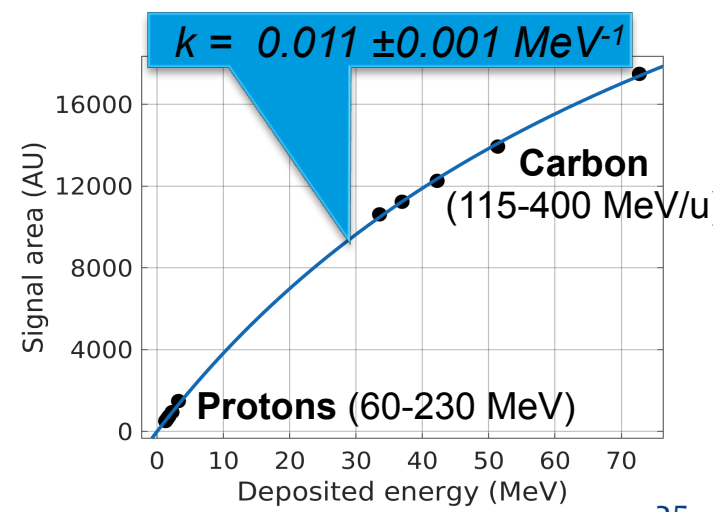

Charge Z identification

Two example plots of Z determination in first bar

Proton (Z=1) irradiation: 98 MeV

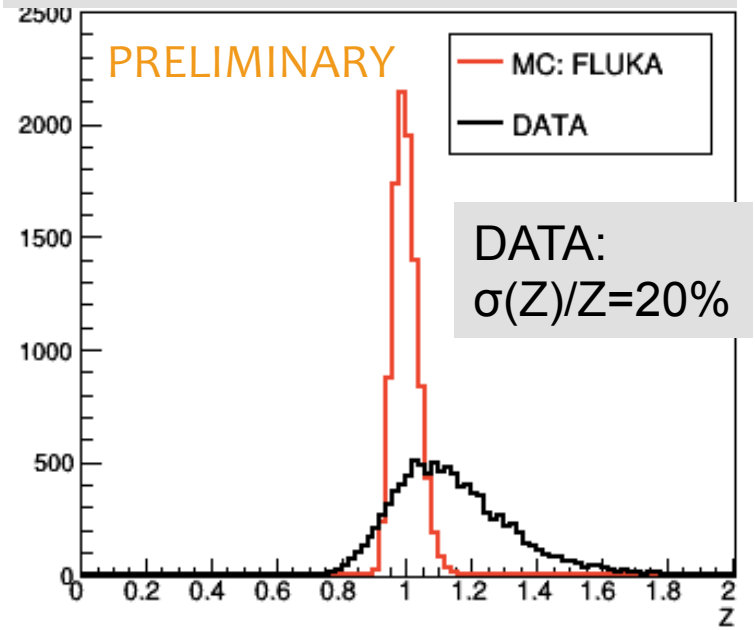

Carbon (Z=6) irradiation: 115 MeV/u

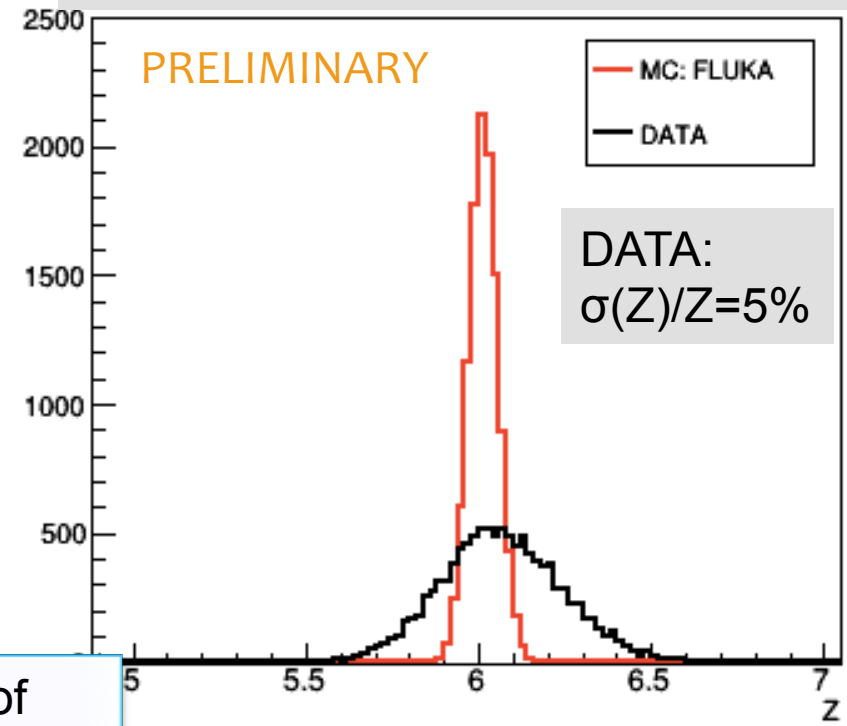

- Accurate energy calibration over wide range of energies is very important!
- Current results:
  - Z=1: σ(Z)/Z~10%-30% (small energy deposits…)
  - Z=6: σ(Z)/Z=5%-15% (quenching…)
  - Other Z: no data yet…
- Working on improvements in TOF determination

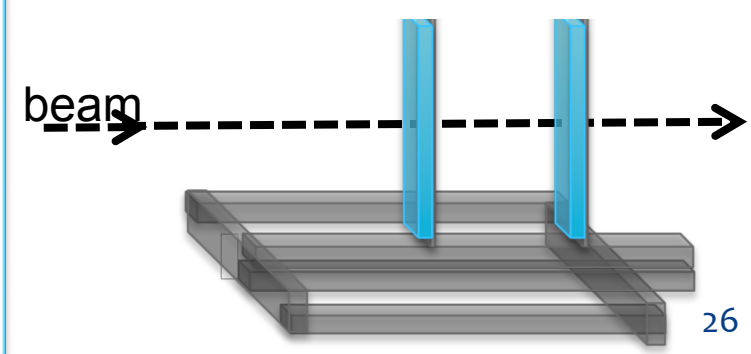

Charge Z identification (FLUKA MC)

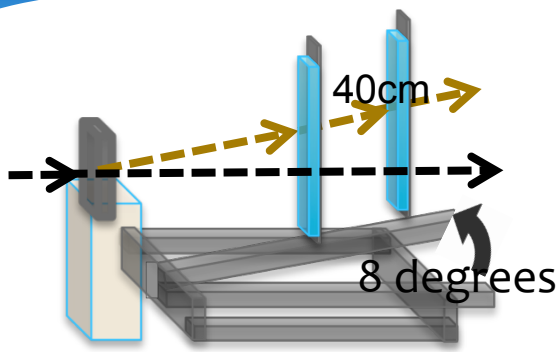

Perfect world:

- A perfect detector
- Single occupancy in the bar
- No fragmentation in bar

From MC we can learn that:

- We expect almost only **light fragments** at 8 degrees (heavier fragments at smaller angles

FLUKA Monte Carlo simulations

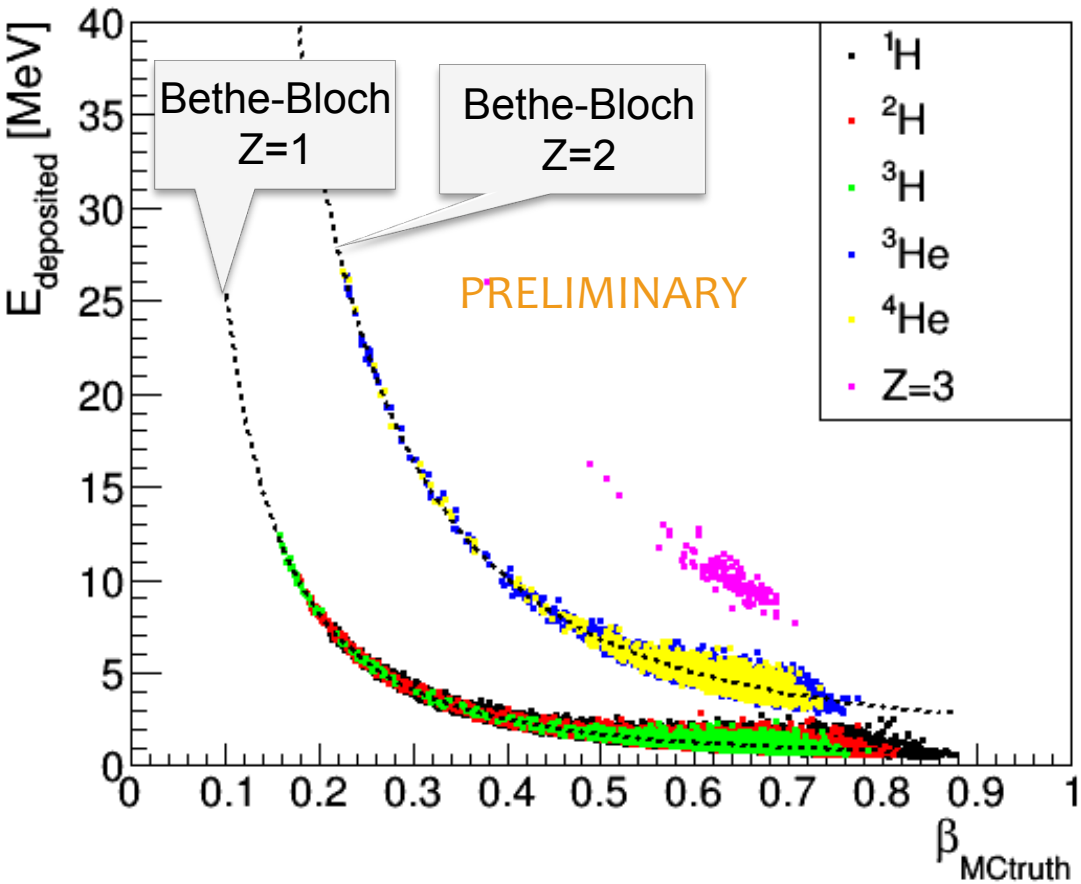

Charge Z identification (data+MC)

Event selection:

- Data and MC:
  - $|E_{bar1}-E_{bar2}|<5$ MeV
  - $E_{bar1}>2$ MeV
  - $E_{bar2}>2$ MeV

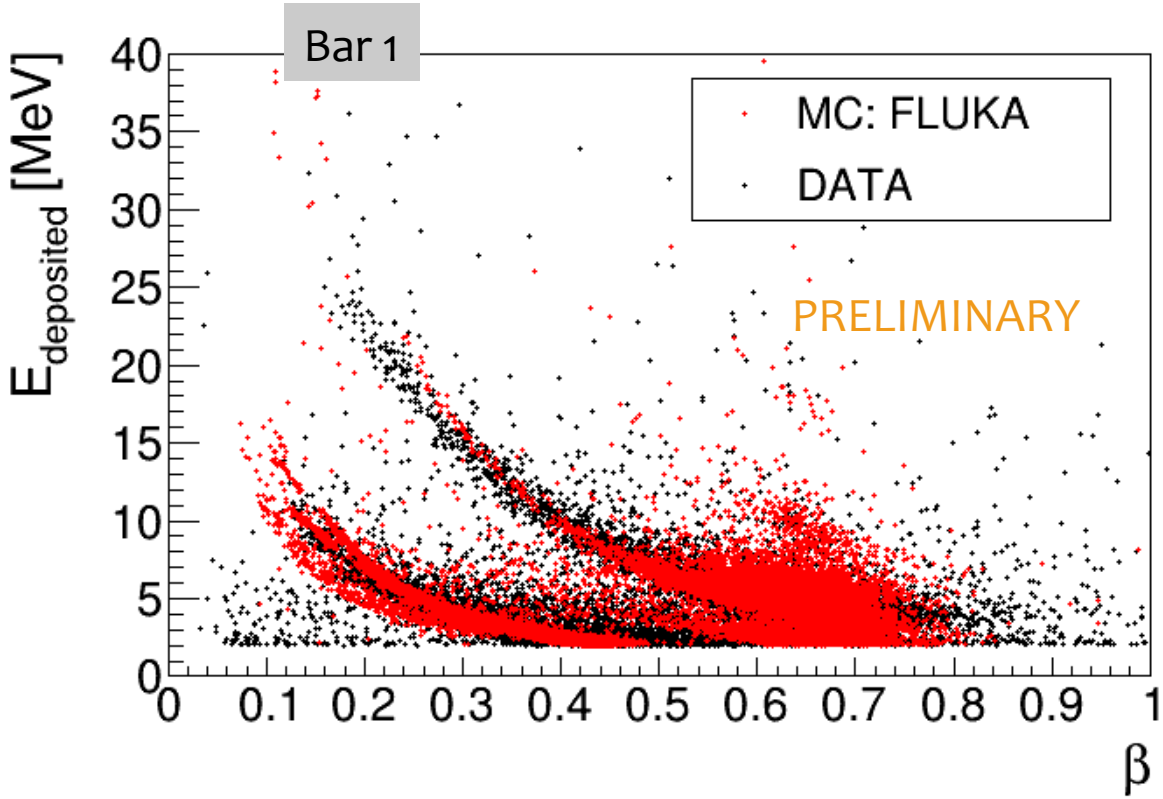

- Generally a good agreement MC-data → energy and TOF determination OK!
- Deviation from "perfect" situation from previous slide due to:
  - Double occupancy
  - Fragmentation of the fragment itself in scintillator (secondary fragmentation)
  - Energy loss in scintillator itself

Charge Z identification (data+MC)

Event selection:

- Data and MC:
  - $|E_{bar1}-E_{bar2}|<5$ MeV
  - $E_{bar1}>2$ MeV
  - $E_{bar2}>2$ MeV

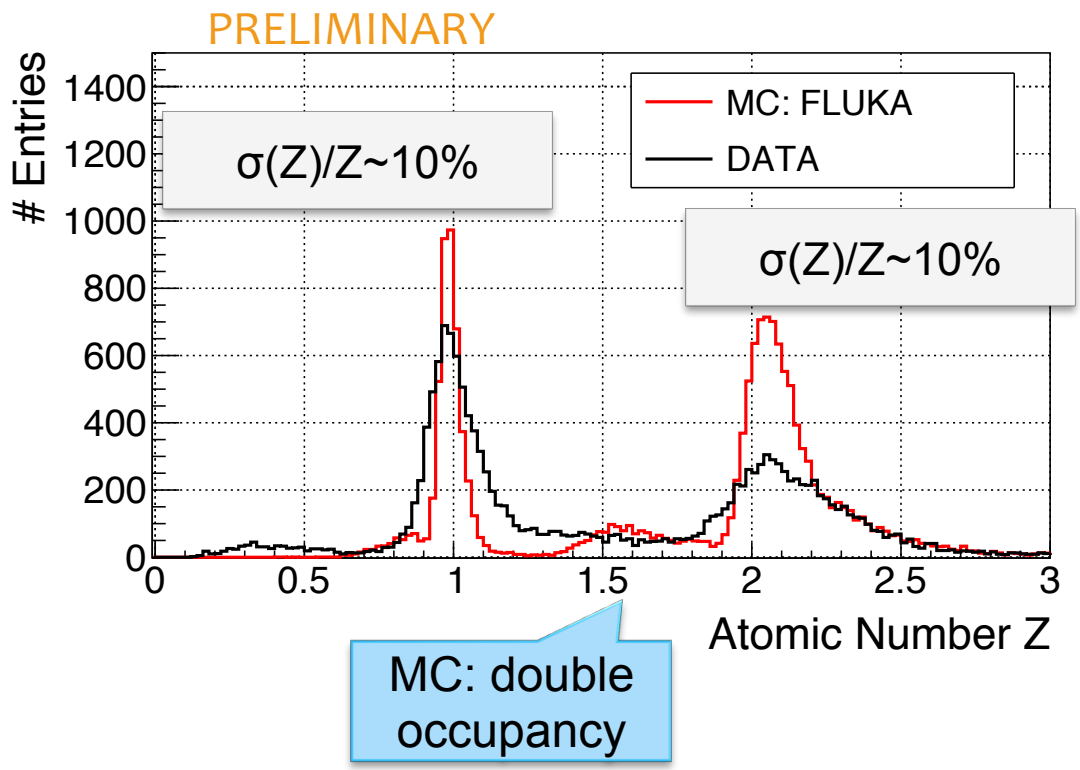

- Generally a good agreement MC-data → energy and TOF determination ok
- Well resolvable!! ΔZ>> FHWM
- Preliminary results…
  - Final analysis still be improved for final FOOT design
  - Systematic error analysis to be done

Conclusion

- FOOT: applied nuclear physics experiment (hadron therapy&space shielding)
- ΔE-TOF detector: for charge determination
- Today: new (preliminary) results for the ΔE-TOF detector
  - Z-identification measurements performed at CNAO
  - Comparisons with FLUKA MC code shown
  - Peaks at Z=1 and Z=2 well resolvable, agreement with MC ok
- Much more to come!
  - Full analysis taking into account all systematics
  - Currently full detector is being assembled in Pisa
  - In April test-beam will be done at GSI with large prototype containing 20+20 bars!
  - Full performance evaluation, assess whether improvements should be made
  - Preparing for full FOOT design

Fragmentation (FLUKA MC)

- Fragmentation in target: about 2% of all incident carbon ions of 330 MeV/c is expected to result in fragment (any direction!)

- Fragmentation of produced fragments in bar itself: about 1% in a bar

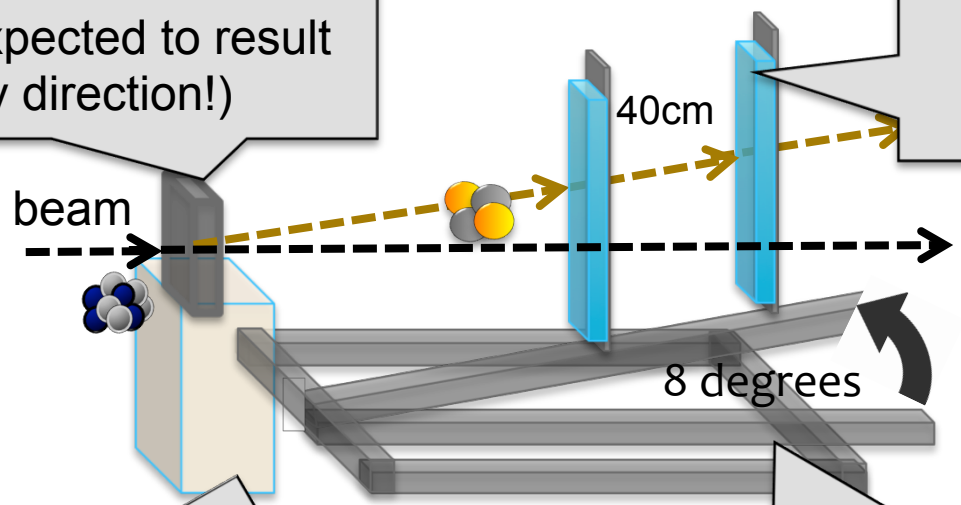

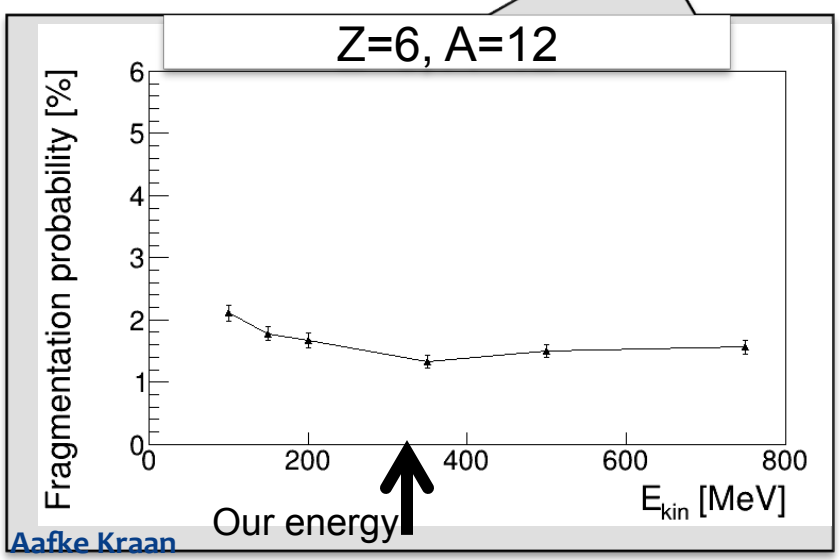

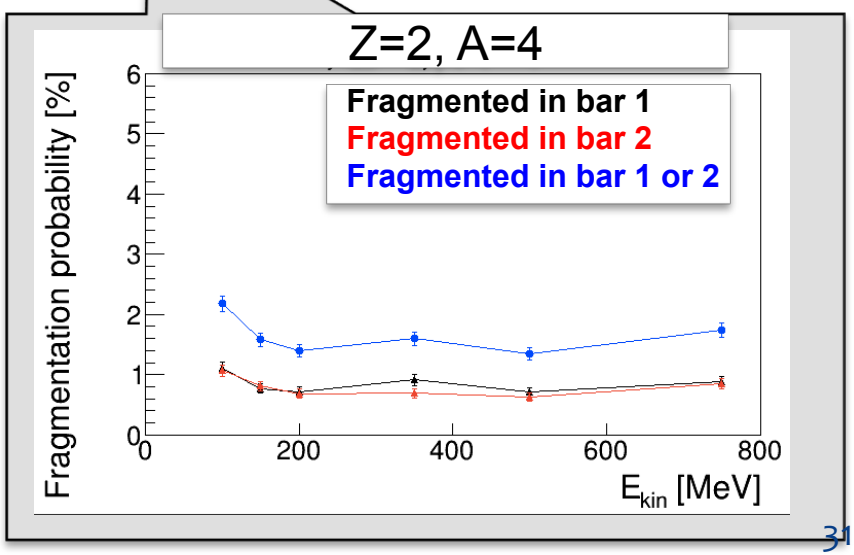

Motivations of the FOOT experiment

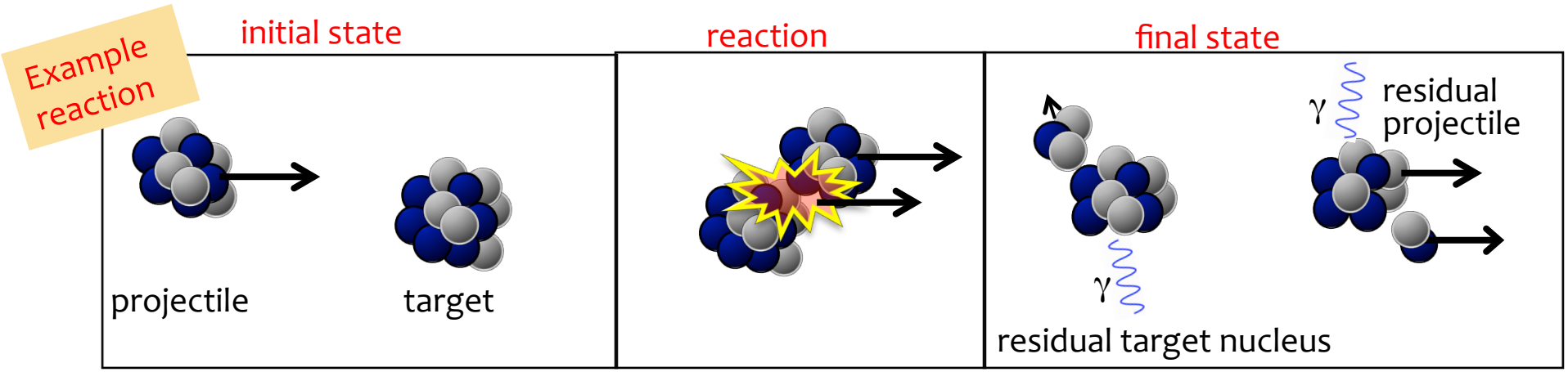

Expected performance

* Charge Z reconstruction → see next!

* Mass A reconstruction: 3 ways
  * TOF & Tracker:
  * TOF & Calorimeter:
  * Tracker & Calorimeter

$$A_1 = \frac{p}{U\,\beta\,\gamma}$$

$$A_2 = \frac{E_{kin}}{U(\gamma - 1)}$$

$$A_3 = \frac{p^2 - E_{kin}{}^2}{2E_{kin}}$$

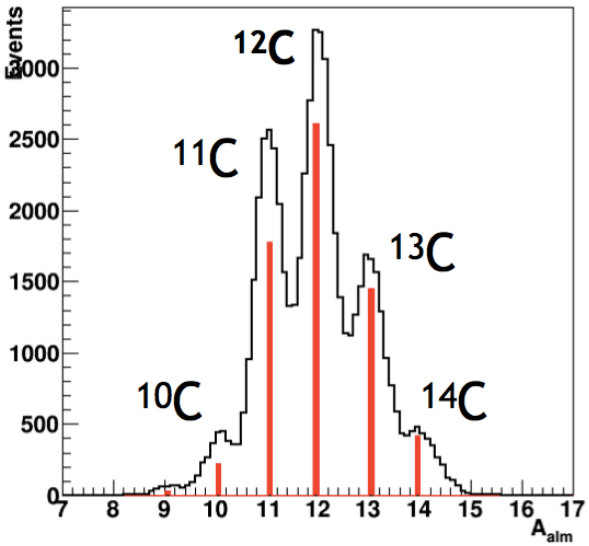

→ Expected resolution to for heavy (Z<=8) fragments: about 3—4%
→ Possibility to disentangle heavy fragments → cross section measurements possible