LS2 Activities and Outlook for the Future

Richard Catherall EN-STI-RBS

ISOLDE Technical Coordinator

ISOLDE workshop 5th – 7th December 2018

The ISOLDE Facility

- Nano-lab
- Medicis operation
- New Frontends
- HT modulator
- Fast tape station
- Beam diagnostics
- Services
- Planning

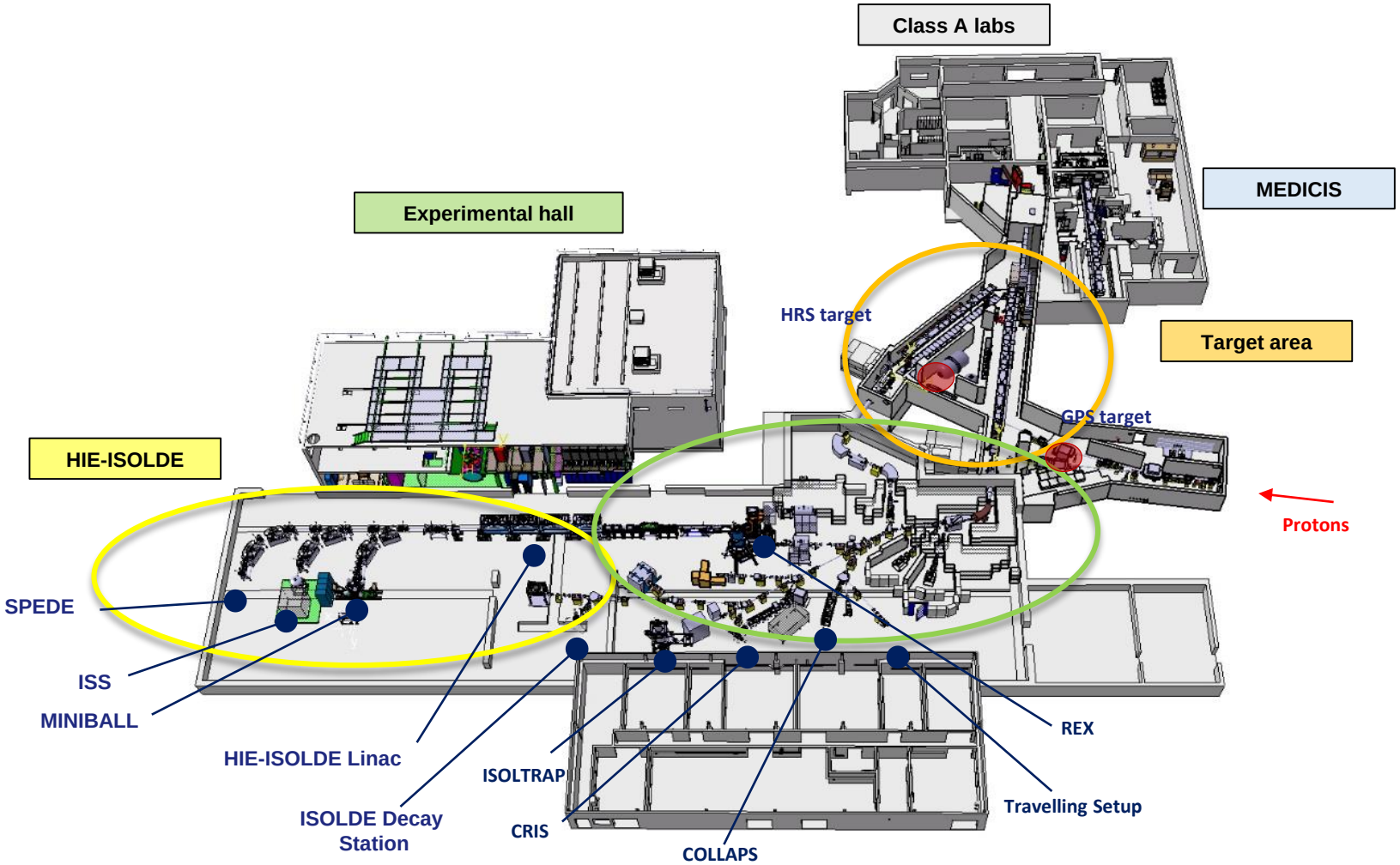

Nano Uranium Carbide Online at ISOLDE

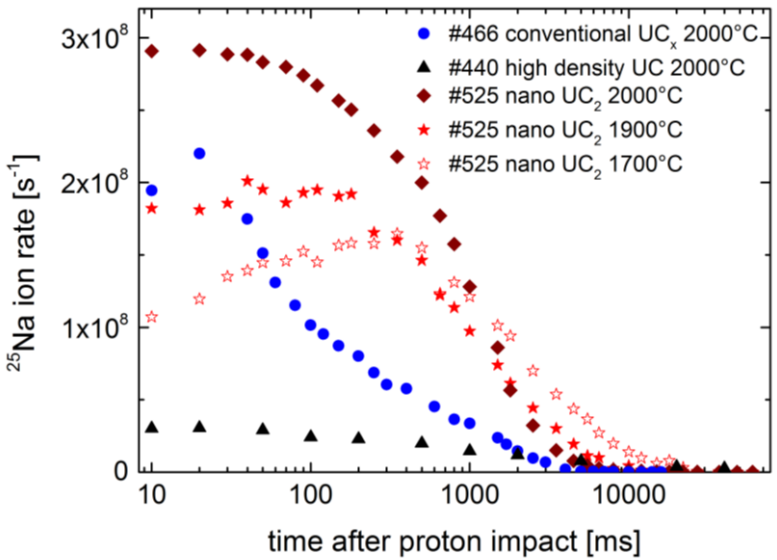

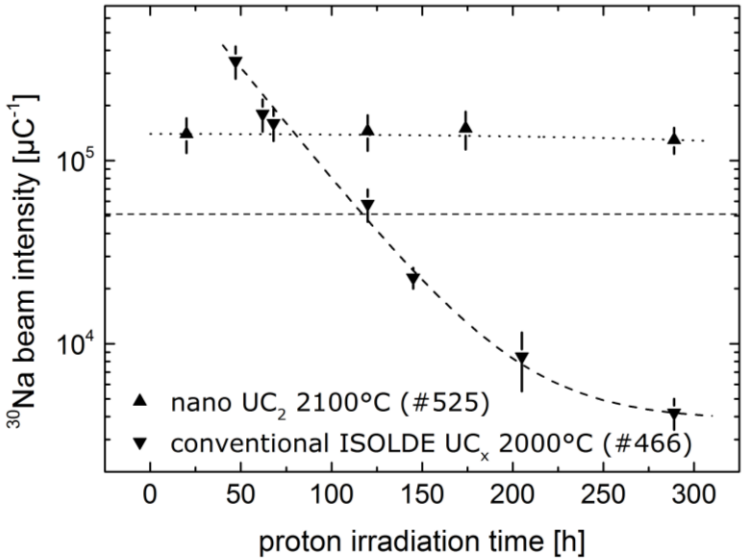

isotope	half life	yield [μC^{-1}]
^{8}Li[1]	840 ms	$2.8\cdot10^{7}$
^{9}Li[1]	178 ms	$1.9\cdot10^{7}$
^{25}Na[1,5]	59.6 s	$2.8\cdot10^{9}$
^{26}Na[1,5]	1.07 s	$9.2\cdot10^{8}$
^{30}Na[2]	48 ms	$1.4\cdot10^{5}$
^{46}K[1,4]	115 s	$3.9\cdot10^{8}$
^{50}K[1,2,4]	472 ms	$8.6\cdot10^{4}$
^{50}Ca[2]	13.9 s	$6.8\cdot10^{4}$
^{41}Sc[1,5]	596 ms	$1.1\cdot10^{5}$
^{68}Cu[2,7]	30 s	$9.6\cdot10^{8}$
^{68m}Cu[1,7]	3.8 min	$3.4\cdot10^{8}$
^{76}Ga[2]	32.6 s	$2.9\cdot10^{7}$
^{81}Ga[2]	1.22 s	$1.1\cdot10^{6}$
^{81m}Rb[2]	30.3 min	$2.2\cdot10^{7}$
^{88}Rb[1,4]	17.8 min	$8.0\cdot10^{9}$
^{93}Rb[1,4]	5.84 s	$2.6\cdot10^{8}$
^{96}Rb[1,5]	199 ms	$1.5\cdot10^{7}$
^{114}Ag[2,8]	4.5 s	$1.4\cdot10^{2}$
^{116m}Ag[2,8]	8.2 s	$9.0\cdot10^{2}$
^{117}Ag[2,8]	72.8 s	$1.6\cdot10^{3}$
^{118}Ag[2,8]	3.7 s	$6.2\cdot10^{4}$
^{120}Ag[2,8]	1.17 s	$2.3\cdot10^{4}$
^{122}Ag[2,8]	0.52 s	$\leq1.3\cdot10^{3}$
^{132}In[1,2]	0.20 s	$1.7\cdot10^{4}$
^{139}Cs[1,4]	9.3 min	$2.6\cdot10^{9}$
^{142}Cs[1]	1.68 s	$1.1\cdot10^{9}$
^{148}Cs[1,4]	158 ms	$1.7\cdot10^{4}$
^{207}Fr[3]	0.148 s	$8.5\cdot10^{7}$
^{230}Fr[1,4]	0.596 s	$7.1\cdot10^{5}$
A = 225[6]		$1.1\cdot10^{9}$

[1]assessed through β detection with release curve integration

[2]assessed through γ detection

[3]assessed with scintillator, assuming 50% α detection efficiency

[4]beam composition assessed through γ spectroscopy

[5]beam composition assessed through half-life measurement

[6]faraday cup measurement

[7]resonant laser ionized

[8]extracted in its 2+ state

[9]assuming 100% branching into investigated γ transition

Courtesy of A. Gottberg

Nano-UC_2-C

- Nano uranium carbide risks
  - pyrophoric in air
  - Nano material handling
  - ATEX
  - Radiological risks

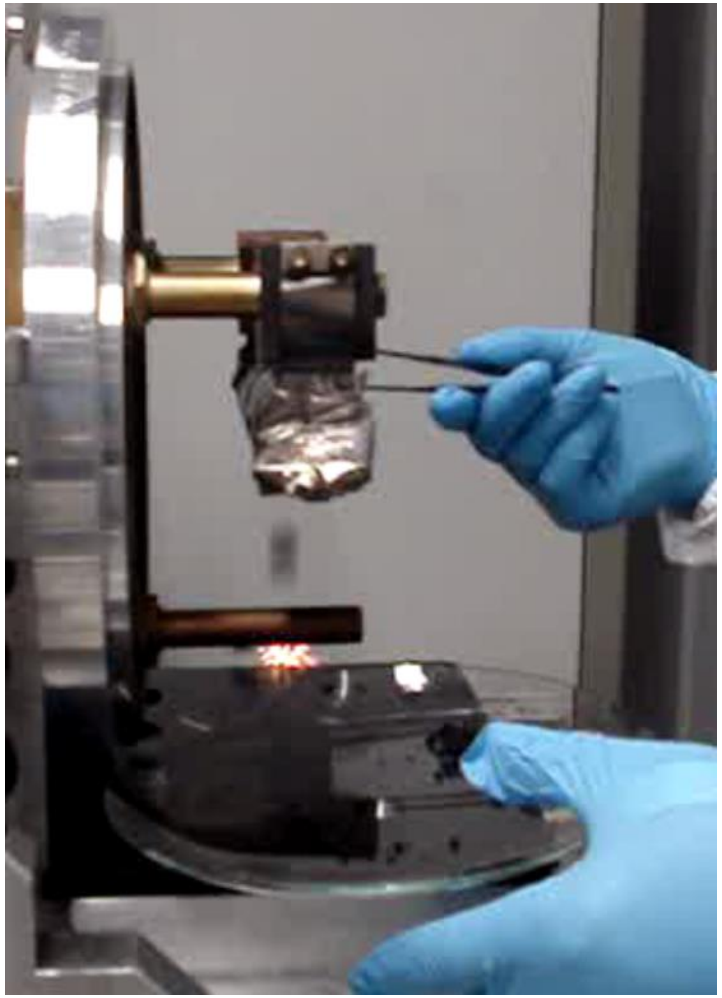

Nanolab

- A laboratory dedicated to the safe handling of nano-actinide materials
- Confinement for pyrophoric uranium carbide (spontaneous ignition in air at room temperature)
- Radioactive storage area for ISOLDE and MEDICIS
- Benefiting from the available infrastructure for Class A type radioactive laboratories
- Civil engineering work to start in October 2019, completion April 2021

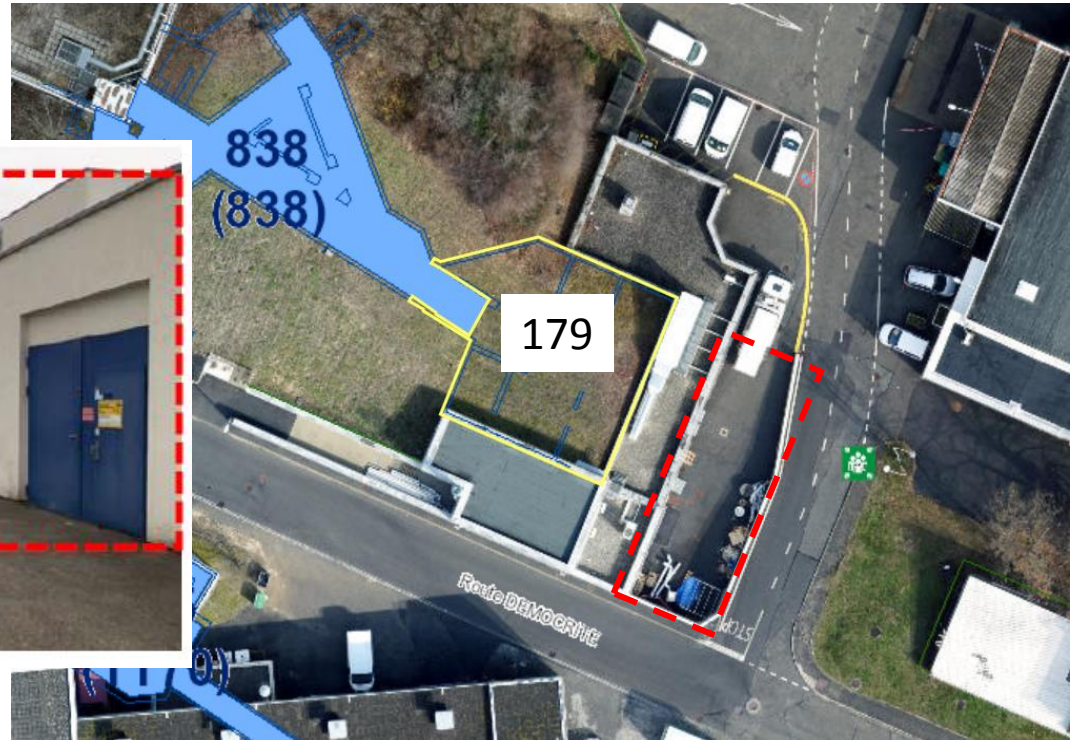

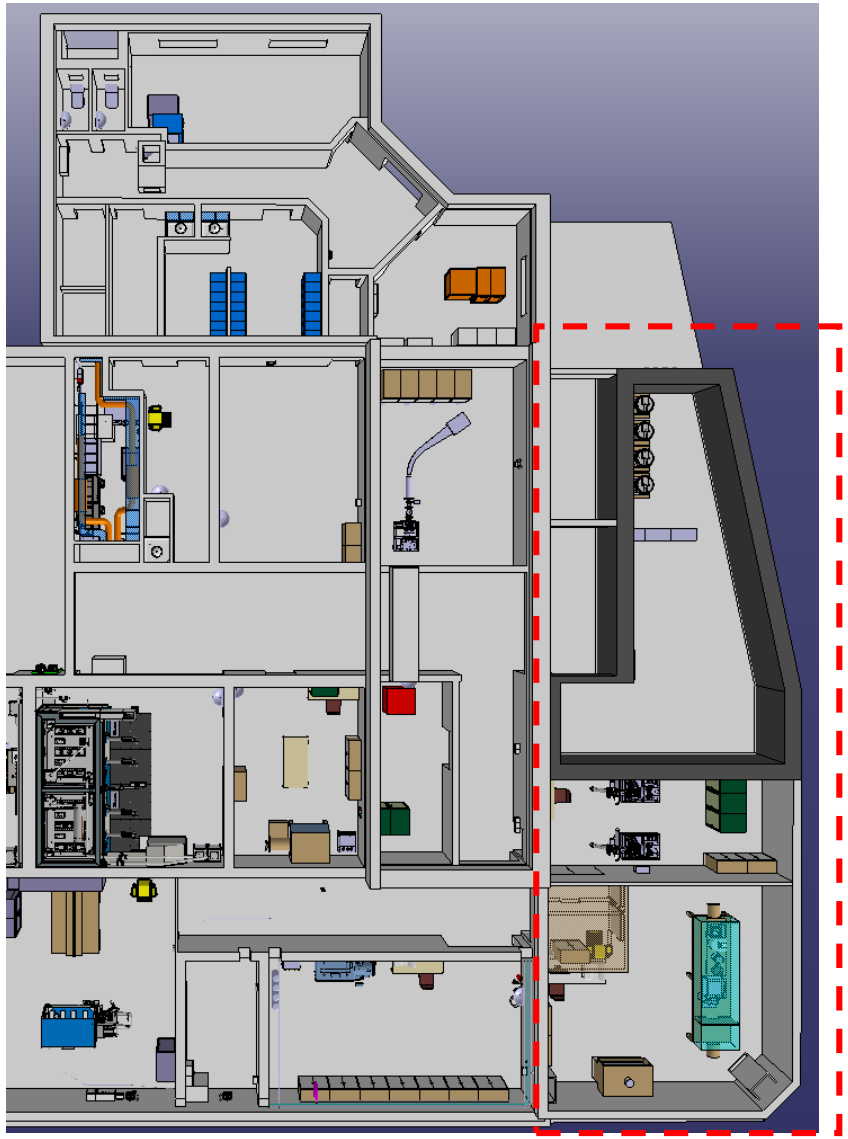

Nano-lab Preliminary Schedule

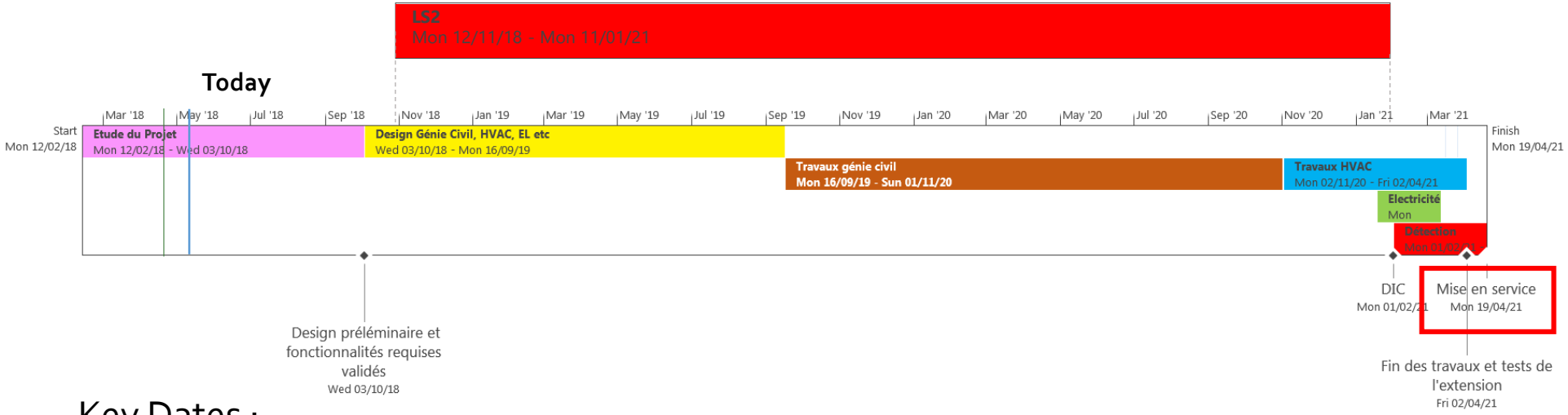

Key Dates :

- Launch of the design in October 2018
- Beginning of LS2 in November 2018 until January 2021
- Beginning of civil engineering works in September 2019
- Installation of the remaining infrastructure from November 2020 to the end of March 2021
- **Commissioning of the extension April 2021**

E.Fontaine & R.Catherall
27/04/2018

CERN- MEDICIS during LS2

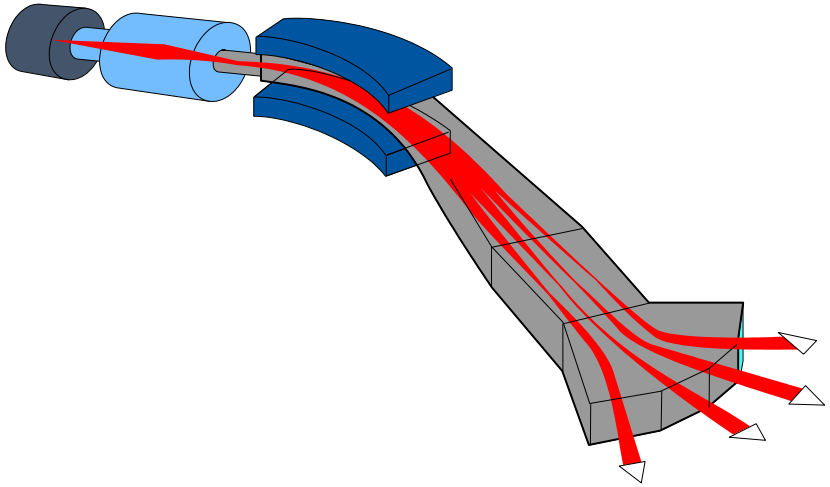

2 months technical stop :

Set-up of radiochemistry laboratory, progress in laser ion source, Maintenance/Consolidation of beamline and remote handling

10 months operation :

Facility restart with new parameters
Operation with imported isotope sources from ILL, Arronax, NMC-Riga
Distribution of purified isotopes to partner institutes

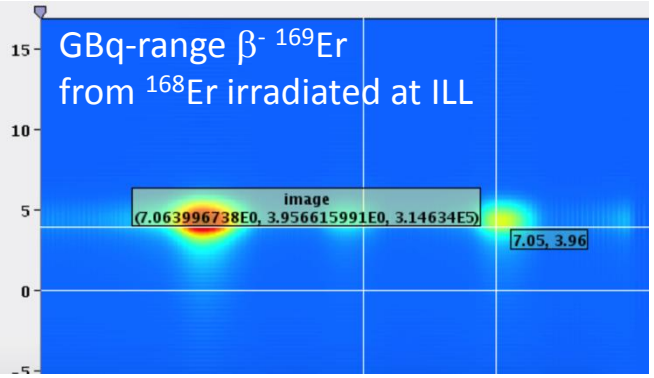

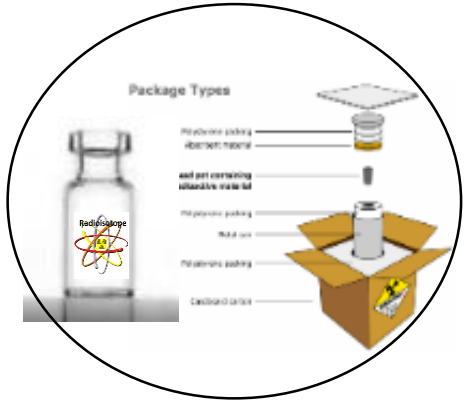

Non-medical projects (as approved by INTC/Research Board could be scheduled in the facility (eg isotope collections), provided it does not collide with the medical program

New Frontends (10 &11) for ISOLDE

- Replacement of the 2 ISOLDE target stations GPS and HRS that have come to the end of their lifetime
- Improvement of new Frontends for better reliability and maintainability.
- Installation September 2019 onwards

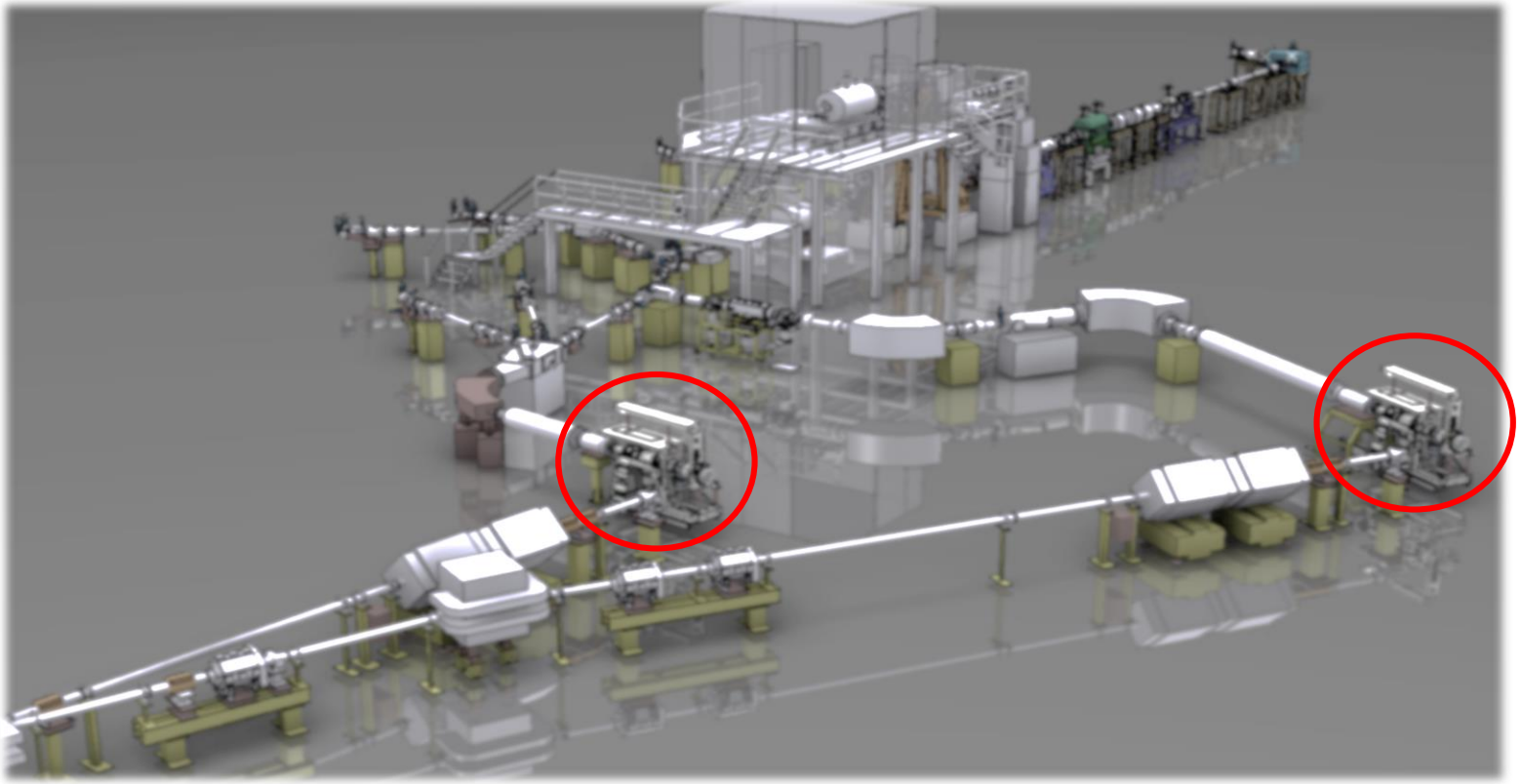

Frontends: Actual situation

FE 6 was installed on **HRS** February 2010 (2010…2018 -> 9 years operation)

- Replacement of the Boris tube cabling
- replacement of FE3 (2001…2009 -> 9 years operation)
- 2011 increase of pressure to 10 bar on the shutter piston
- 2014 change of coupling table
- 2016 change of piston (with metallic segments and ball joint)

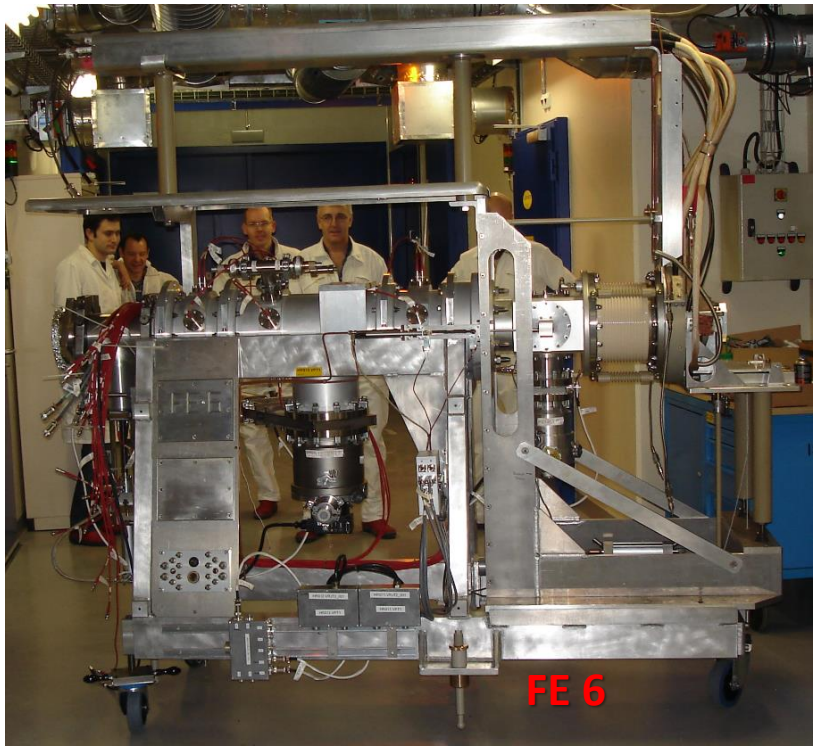

FE 7 was installed on **GPS** February 2011 (2011…2018 -> 8 years operation)

- Replacement of the Boris tube cabling
- replacement of FE4 (2002…2010 -> 9 years operation)
- 2011 increase of pressure to 10 bar on the shutter piston
- 2014 change of coupling table
- 2016 change of piston (with metallic segments and ball joint)

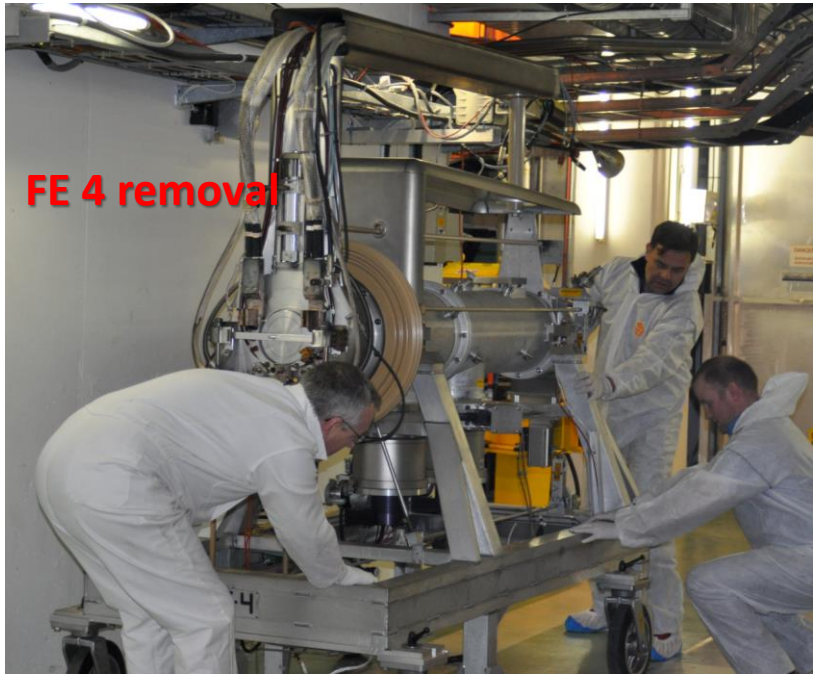

FE 8 is installed on Off-Line 2 and **FE 9** is used for MEDICIS
FE 1, 2, 3, 4 are stored in ISR and **FE 5** is used on Off-line 1

S. Marzari

1. Actual situation

GPS & HRS set of deflectors & wire grid very old (1992) and non operational => **to be replaced !!**

SHV patch panel HRS => To be moved and replaced

GPS

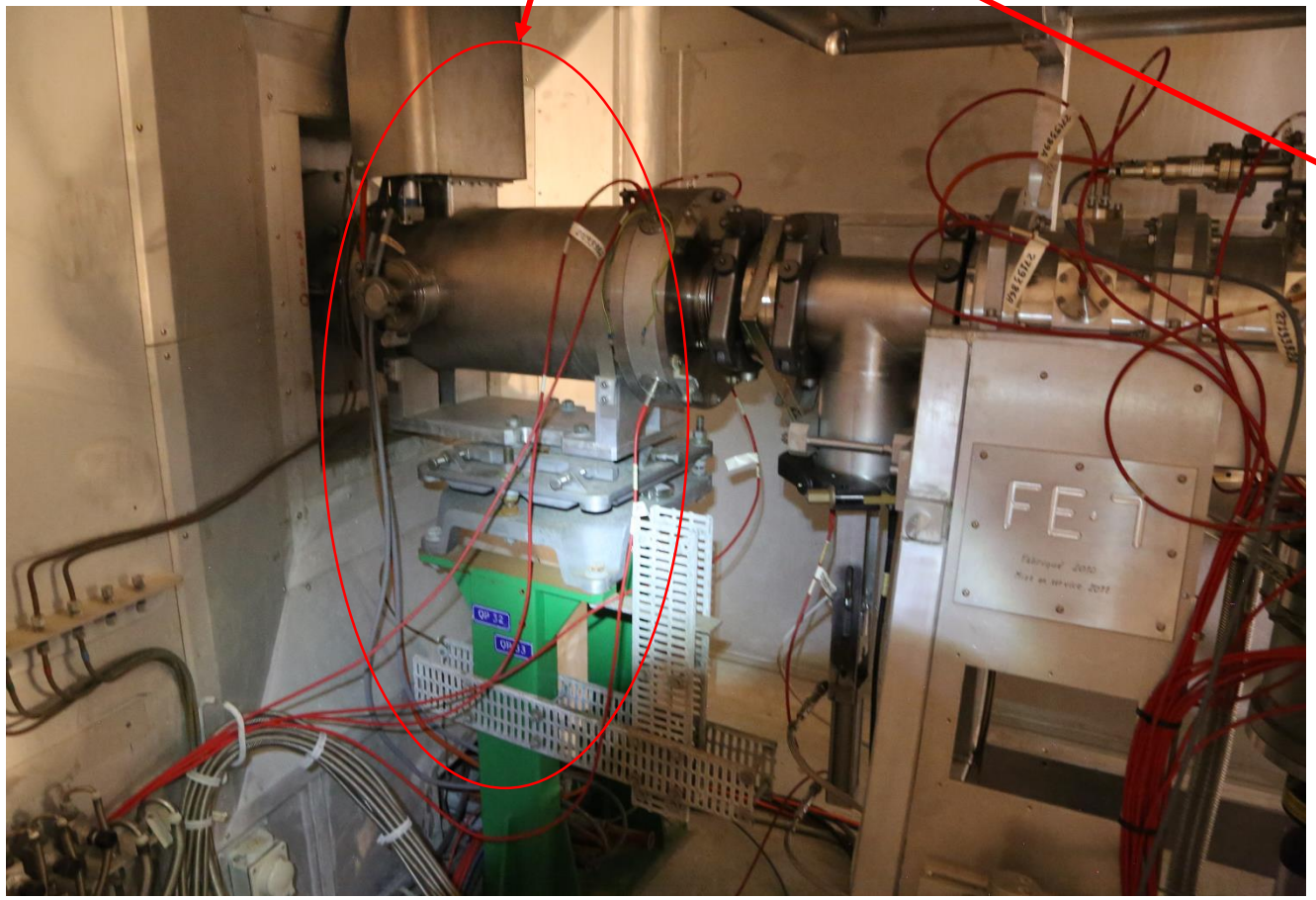

HRS

S. Marzari

2. Frontend 10 & 11 design

FE 10 & 11 **main improvements :**

- Rear deflectors and BI instrumentation (FC and wire grid) integrated on the same frame
- Thicker cable tray with Aluminium conductors
- Increase diameter of the shutter piston and all metal
- Consolidation of the electrode movement system (tested on MEDICIS)
- Integration of end switches on the shutter movement (tested on MEDICIS)
- Better stability of the frame

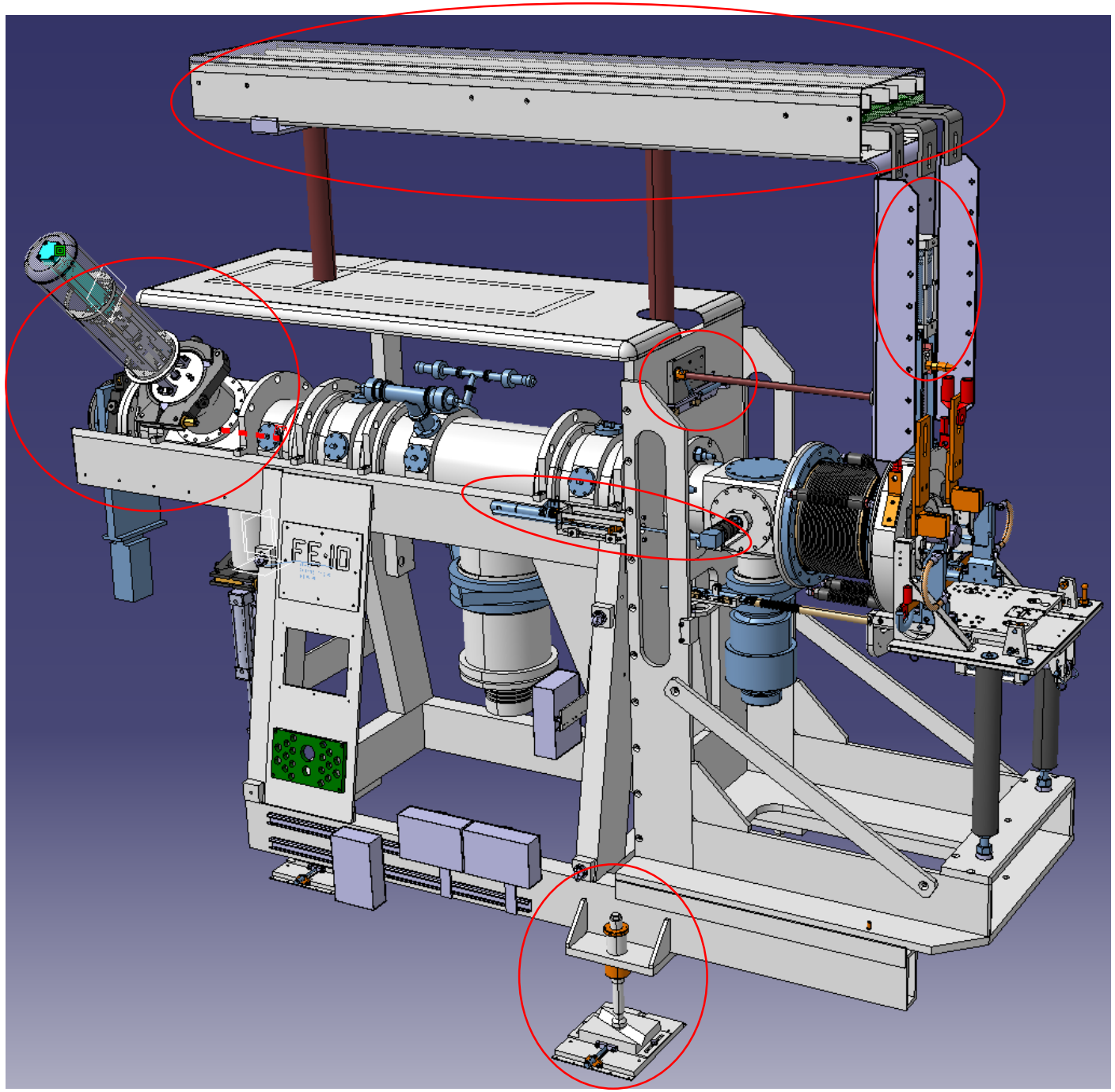

S. Marzari

Other target area activities

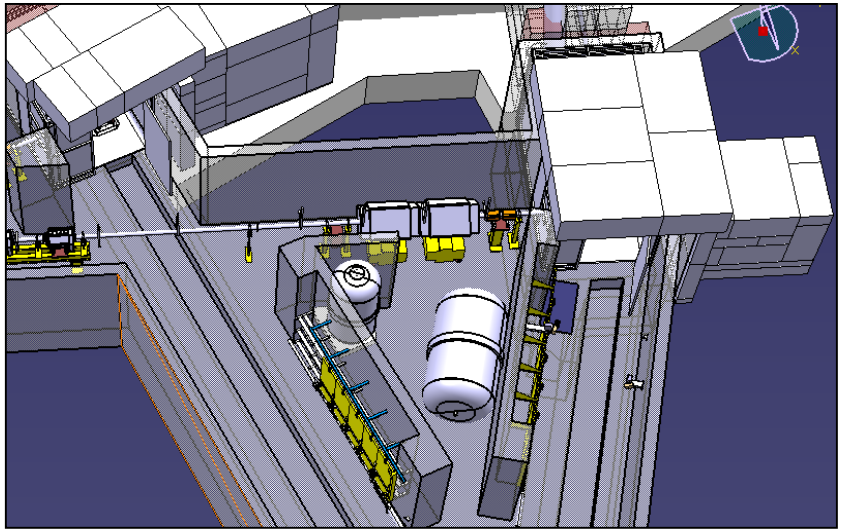

- Cameras
  - Revise and consolidate the current camera situation
    - Shield telescopic camera
- Safety requalification of gas storage tanks
  - Never been tested
  - Request by HSE to test or do visual inspection to continue to operate at > atm pressures
    - If not can only operate up to 1000 mbar Bar instead of 2800 mbar (absolute)
    - Volume of tanks 3m^3 and 5 m^3
- Robot/Montrac maintenance and testing

Fast Tape Station

Commissioning underway:

- Release curves 134 Cs - identical measured values old and new tape station.
- Beta detectors improved for $2x10^6$ counts/seconds rates
- Short lived isotope (^{21}Mg, $T_{1/2}$ =122 ms) yield measured for the **first time**!
- Mechanical controls tested
- Timing sequence tested
- Beam instruments installed and operational
- RIB commissioning continuing
- Installation in CA0 planned for 2019

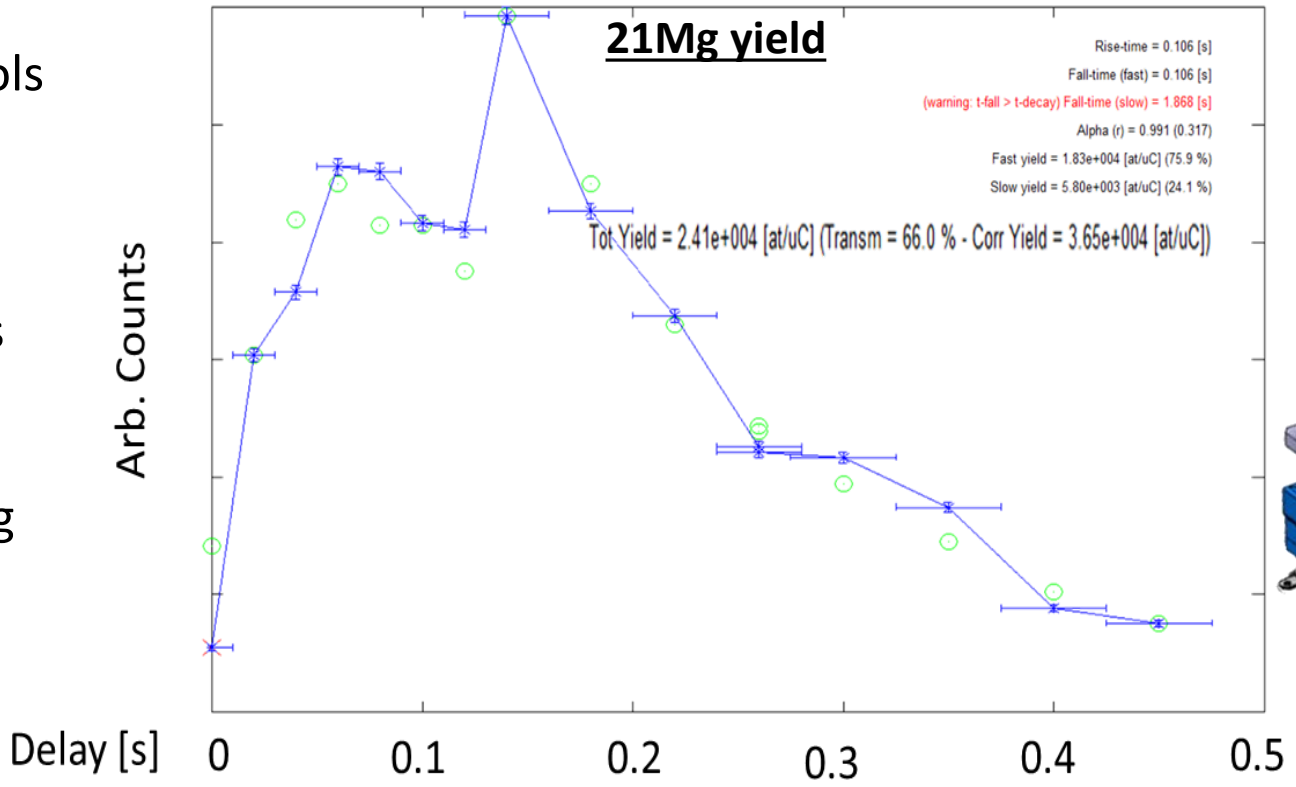

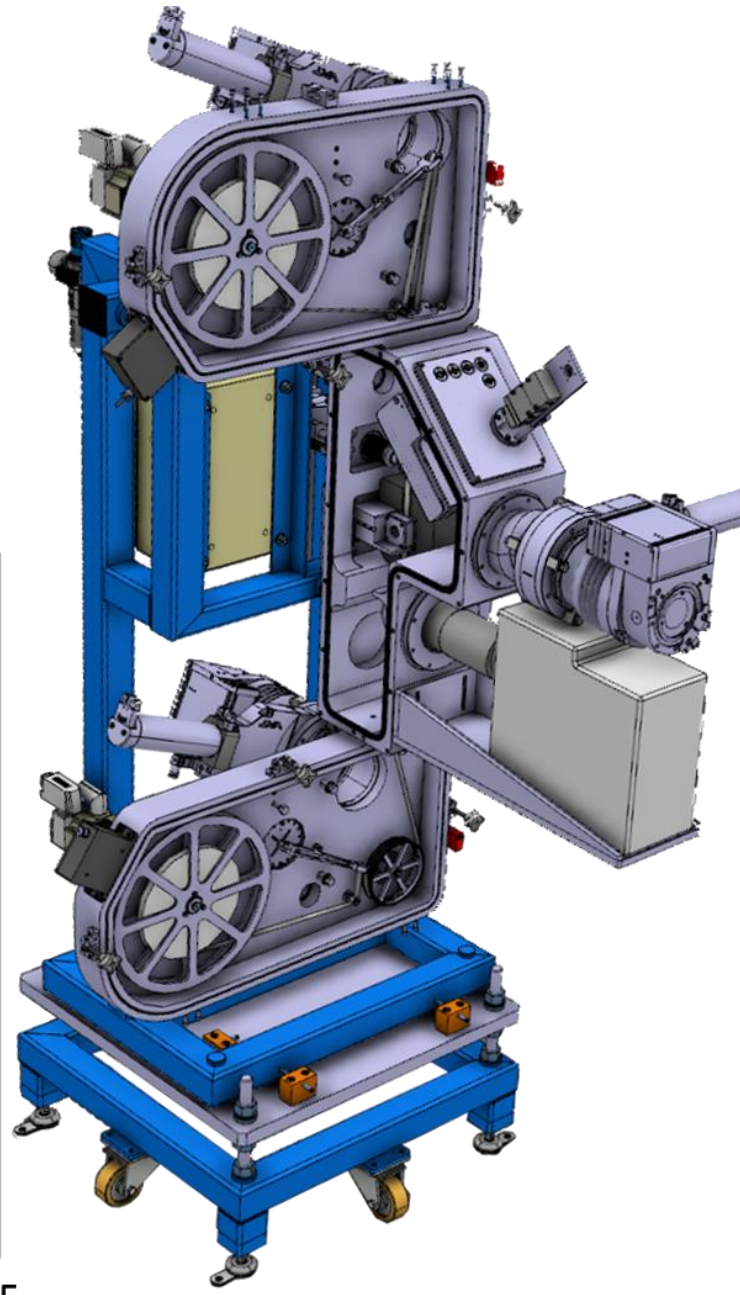

Stuart Warren et al

Fast tape station to central beam line

- Move from testing position at LA2 beam line to final location in the central beam line
- Replaces 42 years old tape station
- Will be the main instrumentation for the target characterisation and yield measurements
  - the “eyes and ears” of ISOLDE operations

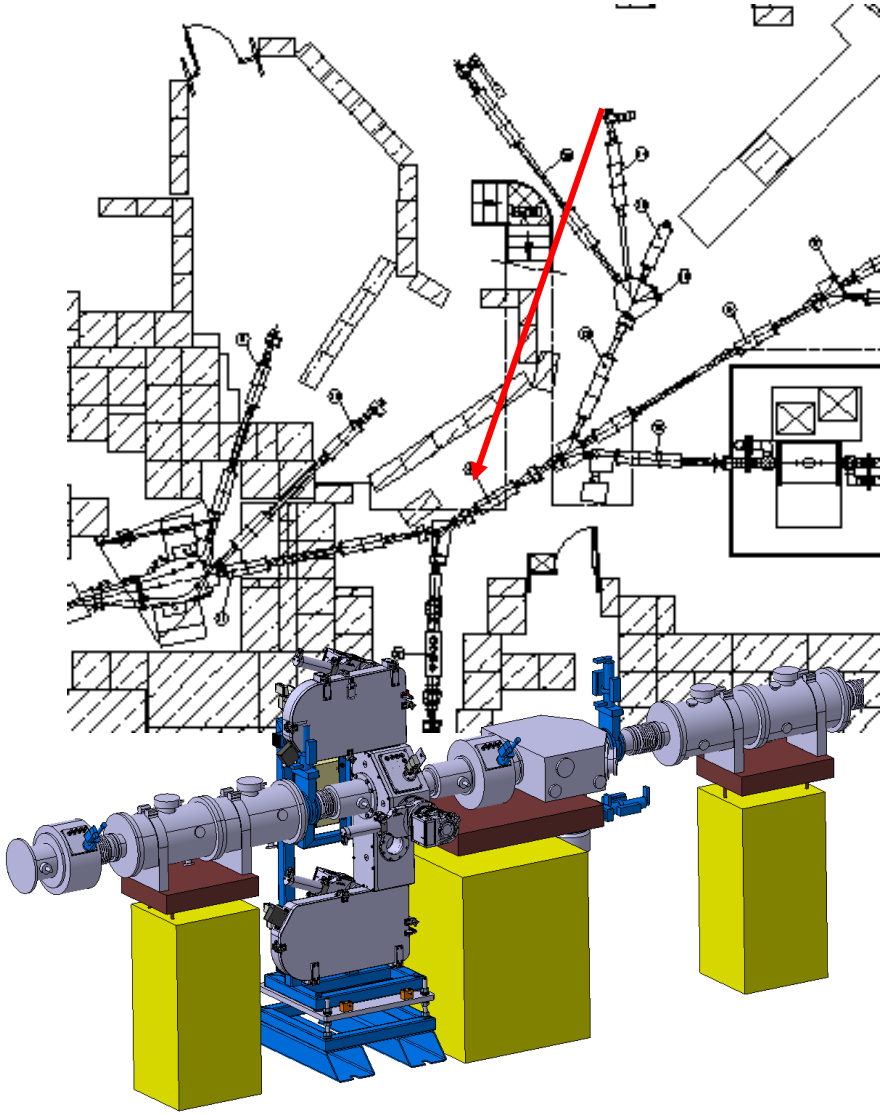

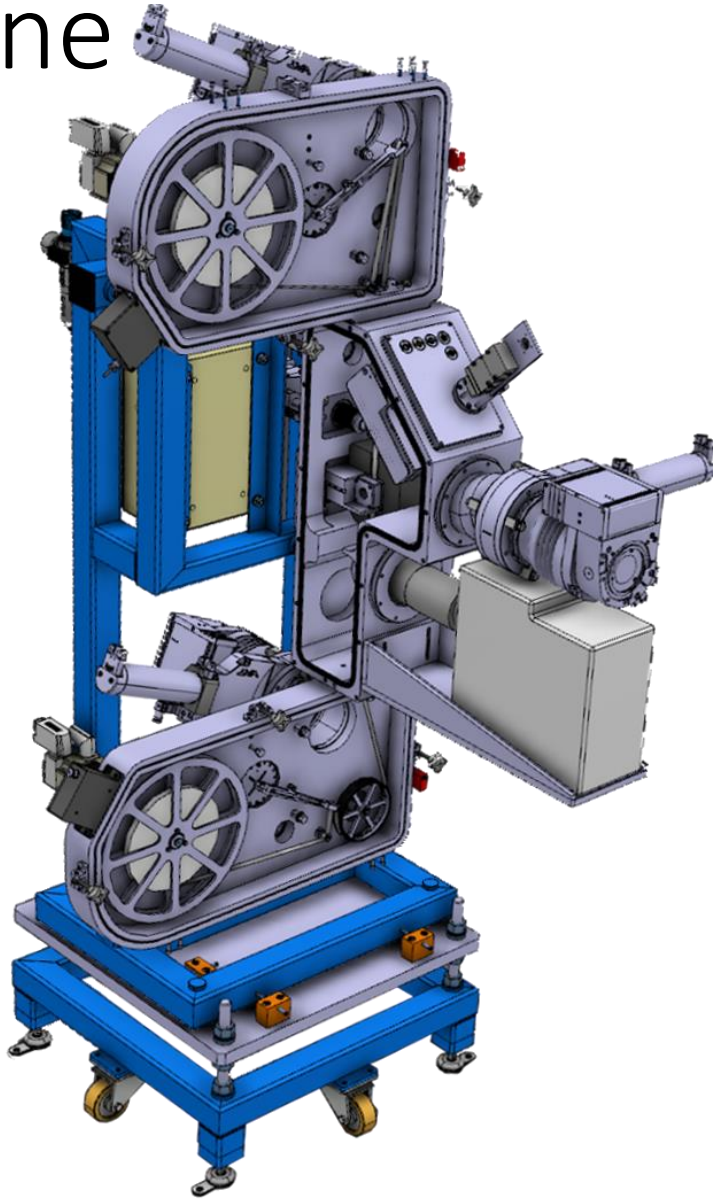

HT Modulator

- A second HT modulator (for the GPS) is planned to be installed during LS2
- However, the negative power supply will only be installed during the 2021-2022 YETS
  - No negative beams available until 2022.

HT (kV)	1E13ppp	2E13ppp	3E13ppp
30	350	370	370
40	400	480	550
50	530	650	750
55	-	-	870
60	620	780	980

Recovery time (µs) of HT (+/-0.6V) with protons on convertor

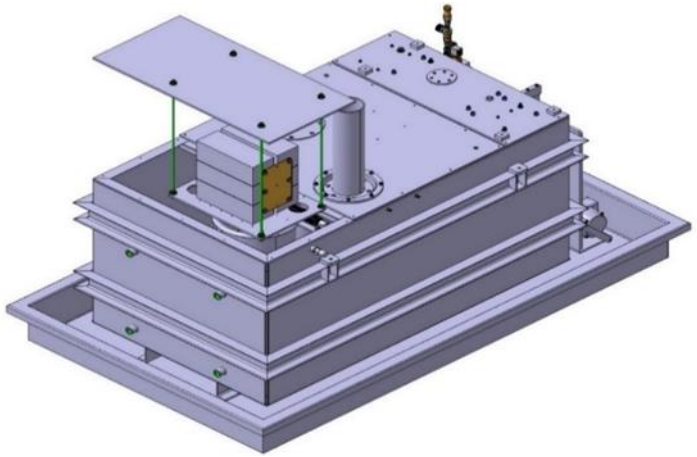

T. Gharsa

Beam diagnostics

- BE-BI group to procure 20 FC/scanner units for low energy beam lines by Q1 2019
  - Need to prioritize which scanners are to be exchanged

	Total	REX	HIE	Low Energy
FC	64	8	23	32
Scanners	46	0	18	27

- Also new scanner units for the separators are under procurement
- To be installed in Q2 – Q4 in 2019

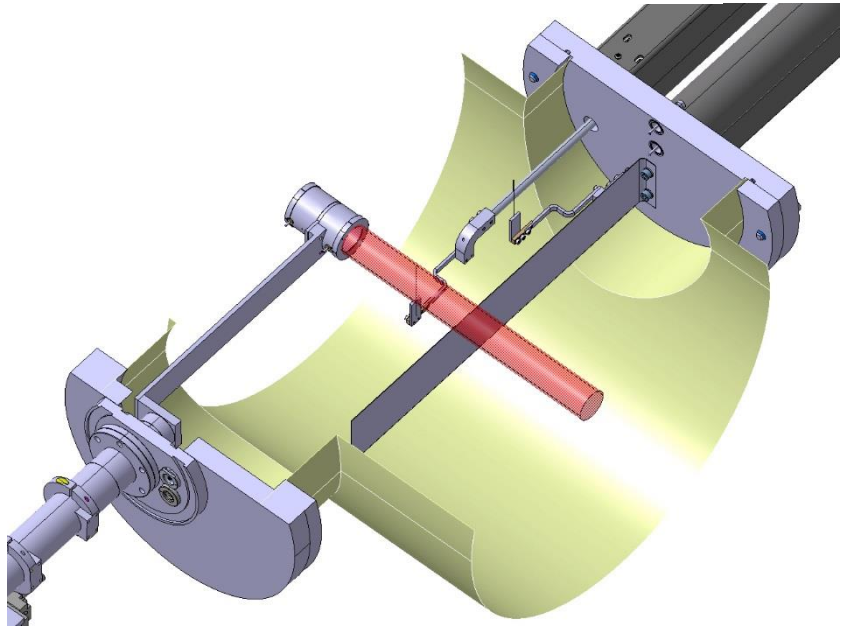

New HRS scanner/FC design

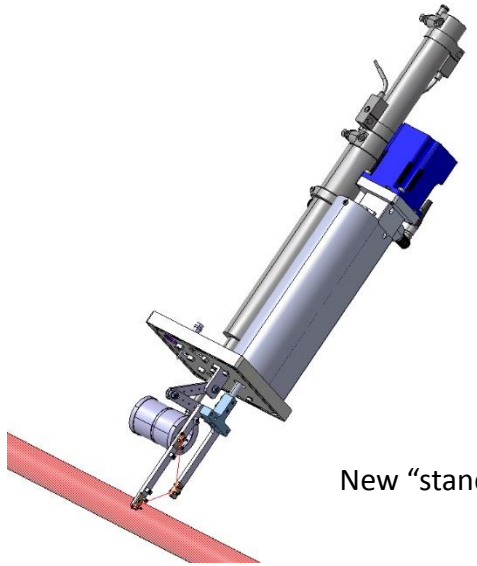

New “standard” scanner/FC design

GPS Scanner: Specification Changes

Magnetically coupled push-pulls: 250 mm stroke
+ 70 mm/needle: **Extra 140 mm to be allocated**

More **combined distance**

+ Covers different mass ranges

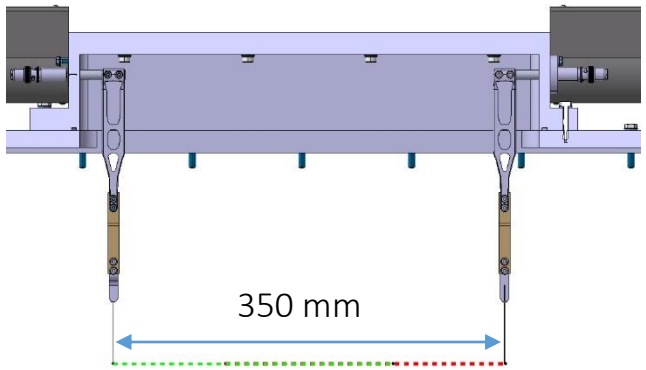

More overlap between two needles

+ Redundancy in case of failure of one needle, more versatile instrument

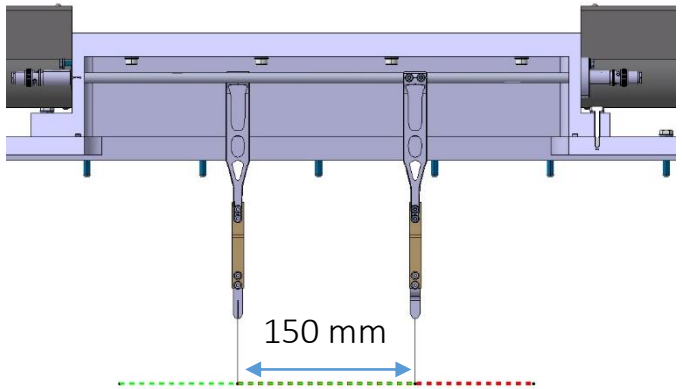

Maximum useful overlap is 147 mm
with central beam = 21Ne

Max. useful range of combined scanners
300 mm (mass range ± 10%)

No need for beam instrumentation at extreme edges when using mass ranges ±15%

T. Giles

	Combined range	Overlap
Current	300 mm	60 mm
New	350 mm	**150 mm**

Ana Miarnau Marin BE-BI

ISOLDE Hall: Separator upgrades

- Mechanical slits on HRS
  - Revise the mechanics (EN-STI-RBS)
- Replacement of flexible compressed air lines
  - 5 yearly preventive maintenance
- *Installation of Fast Tape Station in CA0 beam line*
- Target and ion source gas system to be refurbished
  - Mechanical parts and leak reparation
- Beam gate controls in ICR
- *Beam diagnostics*
- N2 supply line for experiments
- CRIS platform integration and installation?
- *Installation of second HT modulator*

Vacuum

- Maintenance of turbopumps and replacement of oil of primary pumps
- Consolidation of turbopumps (replacement of 6 TMPs)
- Repair leak in tank 1 of exhaust system.
- Replace Profibus full range gauges by compact full range gauges in experimental hall
- Replace REX roughing pump
- Consolidation of compressed air system and installation of reservoirs to better protect the vacuum system against power cuts.
- Support FE installation
- Interventions planned for May/June 2020

Water

Machine	Circuits	Stop	Start
ISOLDE	Cryo-primary	18/12/2018	01/04/20
	BTY magnet cooling	18/12/2018	26/02/21
	Hall (incl. Separators, REXEBIS and REXTRAP)	18/12/2018	28/02/19
	HIE-ISOLDE (HEBT lines + triplets REX + RF B. 199	18/12/2018	01/05/20
	Target cooling	10/12/18	…31/07/20
	Mixed water cooling (Ampli RF bldg. 170 + REX cavities	18/12/2018	31/07/19

Electricity

- Cut of 18kV power to ISOLDE
  - 3rd April 2019
  - UIAC-19701
  - Groupe Trane UHF1-0101
  - EWD15*80 (Armoire CV local 197/R-401
  - EBD12*80 : Hvac bâtiment 508/R-006
  - Tableaux machines : ERD11*80, EXD32*80, ERD5*80 ERD2*80, EXD12*80, EXD16*80
  - Armoire UIA0-00045 CLIM REX ISOLDE
  - Ventilation hall 170 local 170/3-401 (Passerelle sur bâtiment 197)
  - UIAC-00094 Bâtiment 179/1-023
- Punctual stops throughout 2019 with prior notice

Stops already announced:
19/12/2018 06:00 to 06:30
Weekend du 20/01/2019 AUG tests PS/Booster

Ventilation and compressed air

- Ventilation
  - 4 weeks stop of ventilation systems throughout ISOLDE
- Cooling maintenance
  - 4 weeks during the stop of the cryo-compressor
  - Proposed dates January and February 2019
- Compressed air will be operational throughout LS2

Planning

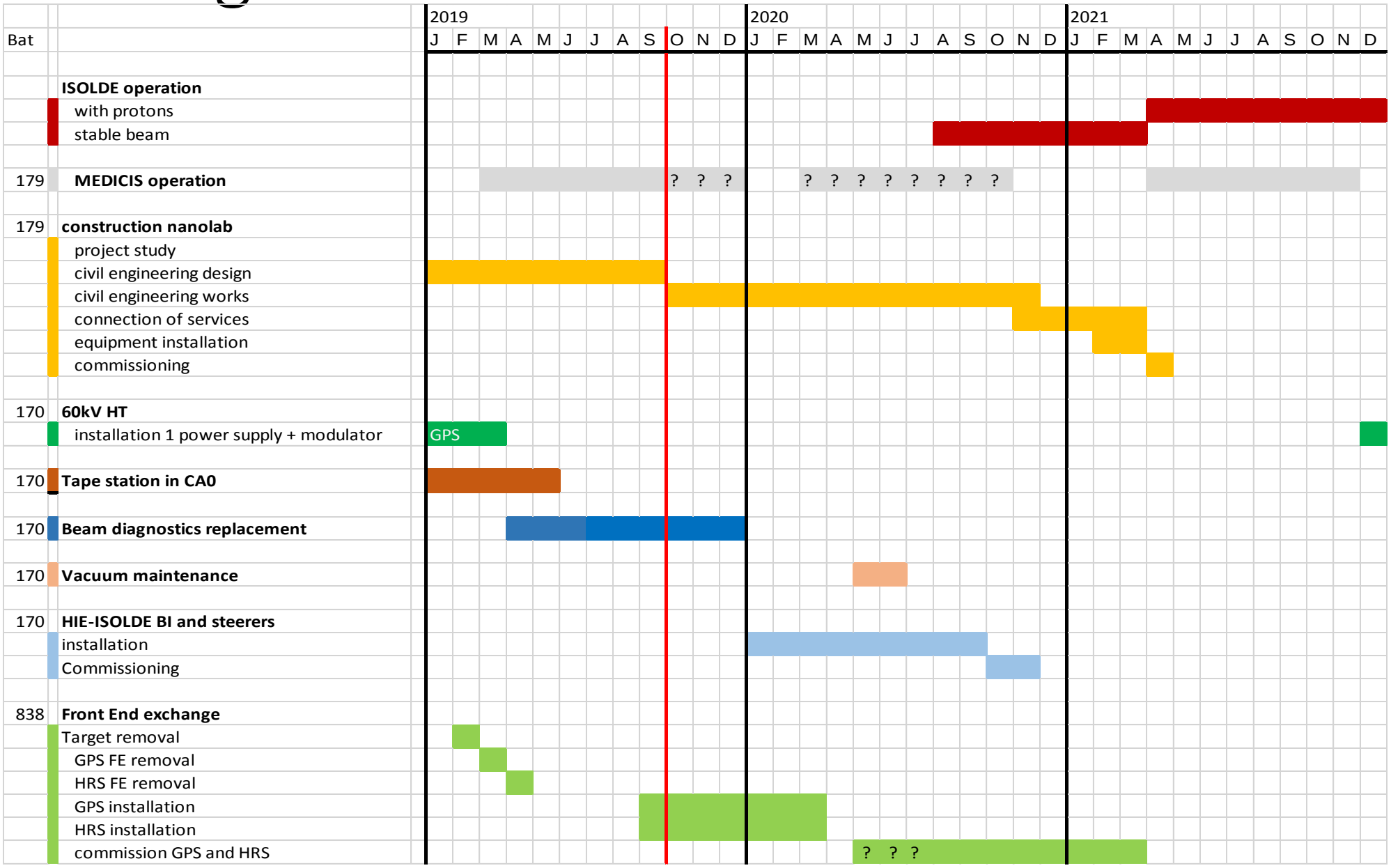
2019
2020
2021
J F M A M J J A S O N D J F M A M J J A S O N D J F M A M J J A S O N D
Bat
ISOLDE operation
with protons
stable beam
179 MEDICIS operation
? ? ? ? ? ? ? ? ? ? ? ? ? ?
179 construction nanolab
project study
civil engineering design
civil engineering works
connection of services
equipment installation
commissioning
170 60kV HT
installation 1 power supply + modulator
GPS
170 Tape station in CA0
170 Beam diagnostics replacement
170 Vacuum maintenance
170 HIE-ISOLDE BI and steerers
installation
Commissioning
838 Front End exchange
Target removal
GPS FE removal
HRS FE removal
GPS installation
HRS installation
commission GPS and HRS
? ? ?

…and Outlook for the Future

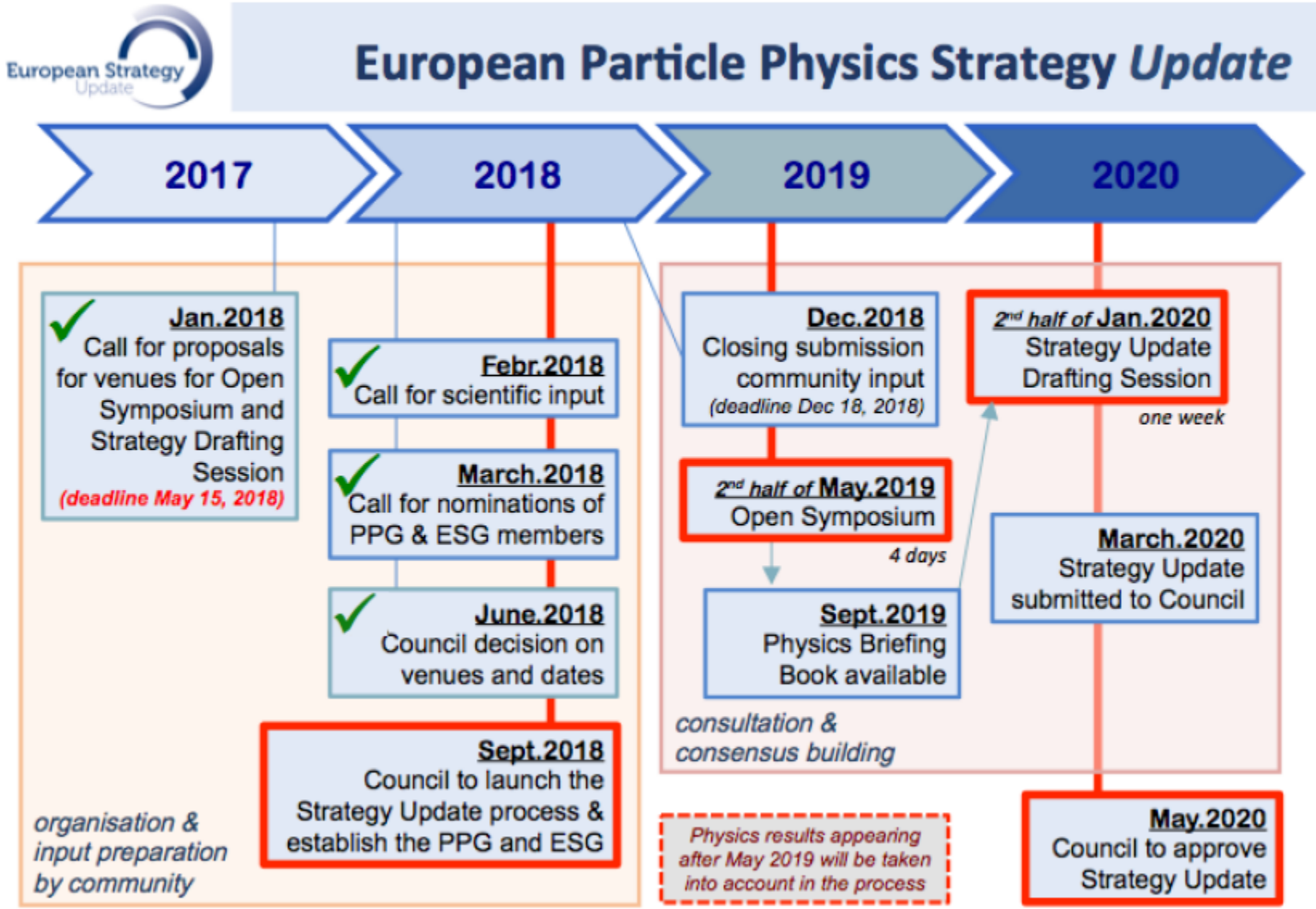
European Strategy Update
European Particle Physics Strategy Update
2017
2018
2019
2020
Jan.2018
Call for proposals for venues for Open Symposium and Strategy Drafting Session
(deadline May 15, 2018)
Febr.2018
Call for scientific input
March.2018
Call for nominations of PPG & ESG members
June.2018
Council decision on venues and dates
Sept.2018
Council to launch the Strategy Update process & establish the PPG and ESG
organisation & input preparation by community
Dec.2018
Closing submission community input
(deadline Dec 18, 2018)
2nd half of May.2019
Open Symposium
4 days
Sept.2019
Physics Briefing Book available
consultation & consensus building
Physics results appearing after May 2019 will be taken into account in the process
2nd half of Jan.2020
Strategy Update Drafting Session
one week
March.2020
Strategy Update submitted to Council
May.2020
Council to approve Strategy Update

ISOLDE in the EPPS

The EPIC project:

Exploiting the Potential of ISOLDE at CERN

the ISOLDE Collaboration input to the European Strategy for Particle Physics update

Gerda Neyens, ISOLDE Collaboration Spokesperson
Richard Catherall, ISOLDE Technical Coordinator
Bertram Blank, Chair of the ISOLDE Collaboration
Karsten Riisager, Chair of the ISOLDE and n-TOF (INTC) program committee

With many thanks to Klaus Blaum, Yuri Litvinov, Ronald Garcia Ruiz, Kieran Flanagan, Manfred Grieser, Erwin Siesling, Tim Giles and many others…

Present ISOLDE beams

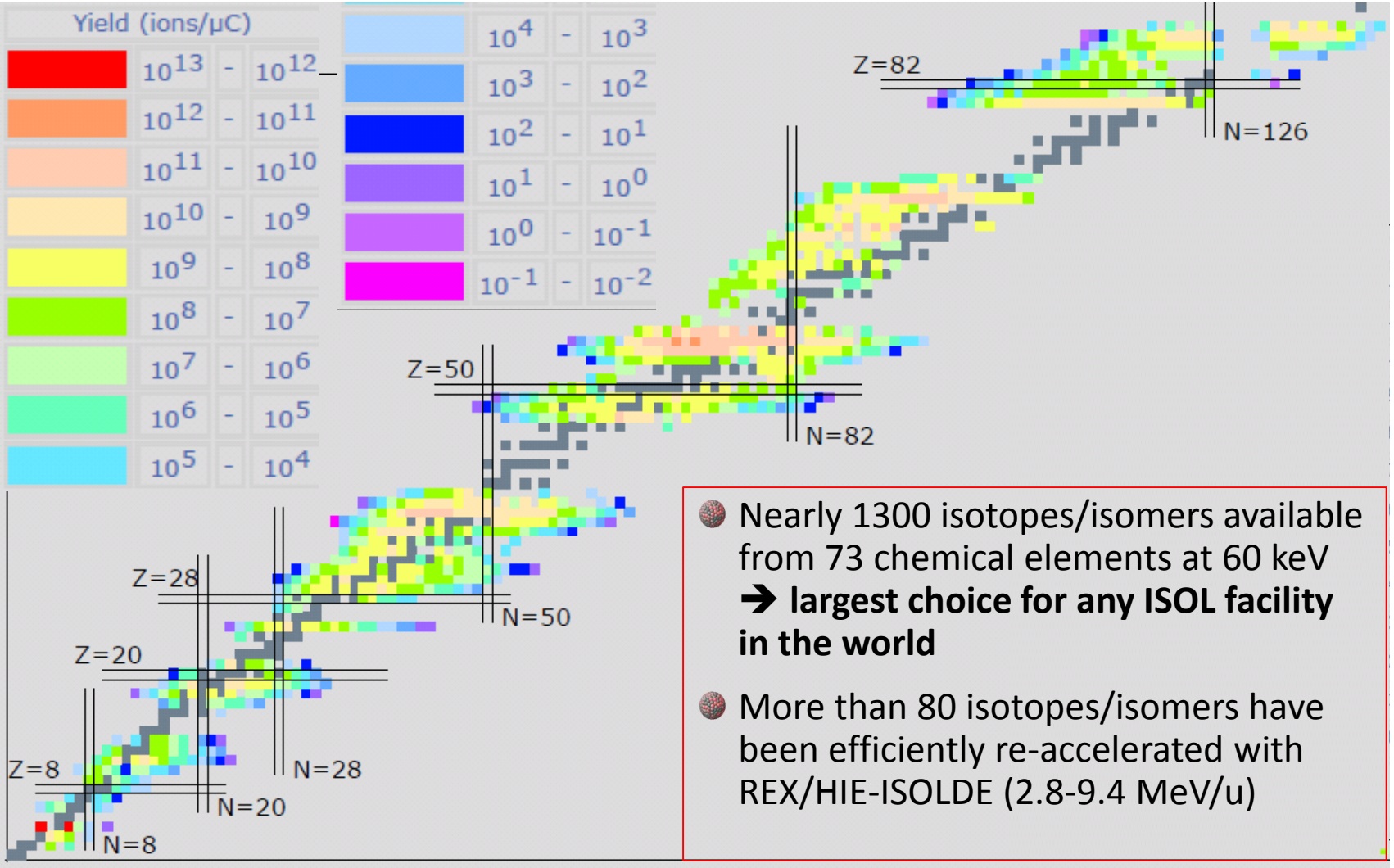

- Nearly 1300 isotopes/isomers available from 73 chemical elements at 60 keV ➔ **largest choice for any ISOL facility in the world**
- More than 80 isotopes/isomers have been efficiently re-accelerated with REX/HIE-ISOLDE (2.8-9.4 MeV/u)

The ISOLDE users community

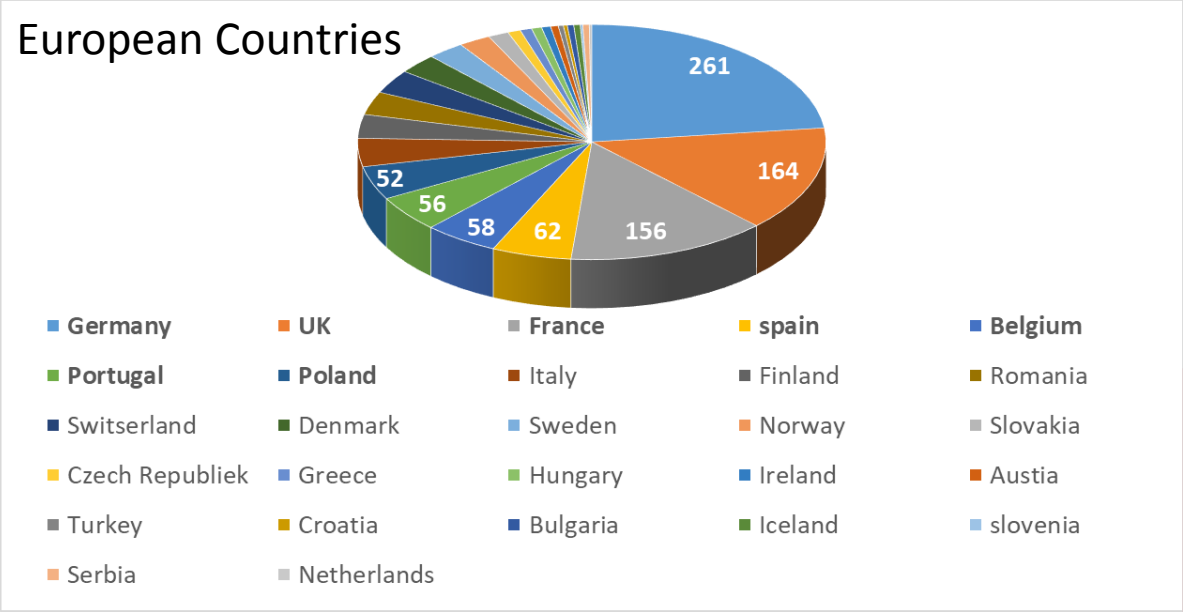

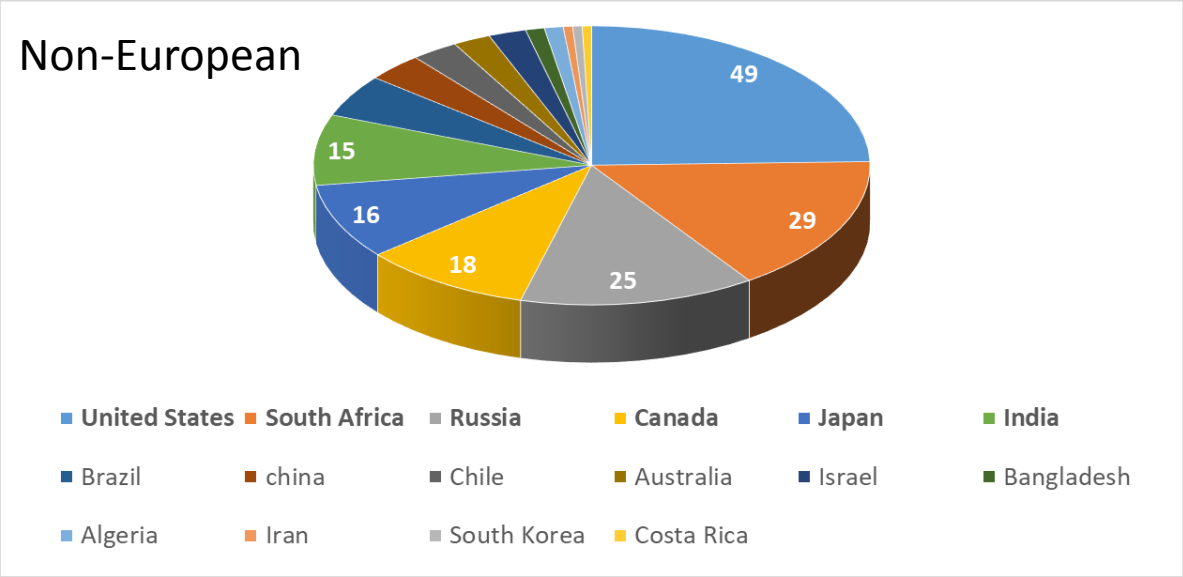

Since post-accelerated beams became available: continuous growing users community !

ISOLDE USERS:

- **In pre-HIE-ISOLDE era: 500-600**
- **Today: 1314 !**
  - ✓ **From 43 countries**
  - ✓ **From > 200 institutions**
  - ✓ **From all around the world**

3 objectives

- Profit from increased driver beam energy and intensity (2 GeV, 4 μA), thanks to CERN's investment in the LHC Injector Upgrade (LIU) and improve the exploitation of the existing infrastructure
- Have multiple simultaneous beams for users
- A new storage ring for short-lived, light and heavy ions

Objective 1

Profit from increased driver beam energy (2 GeV) and intensity (4 μA)

- Take advantage of CERN's LHC Injector Upgrade (LIU): higher proton intensities from LINAC4 and Booster energy increase from 1.4 GeV to 2 GeV
- GAIN FOR ISOLDE: **Higher radioactive beam intensities** for fragmentation and spallation products (gain between factor of 2 and more than 10 in intensity)
- **NEED INVESTMENTS, in order for ISOLDE TO RECEIVE THESE BEAMS:**
  - New beam dumps to cope with higher power
  - New transfer line from booster to ISOLDE

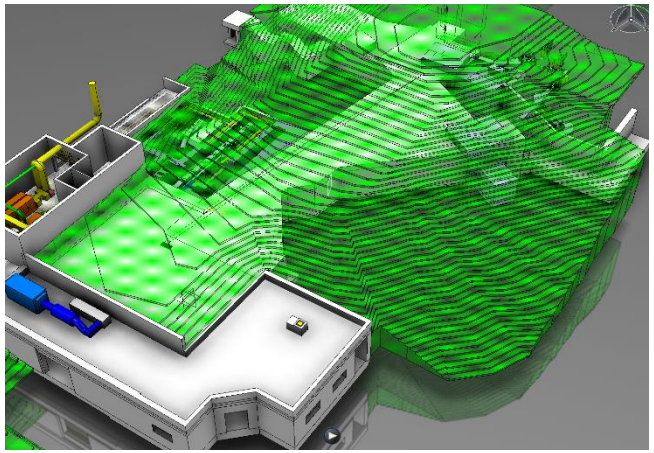

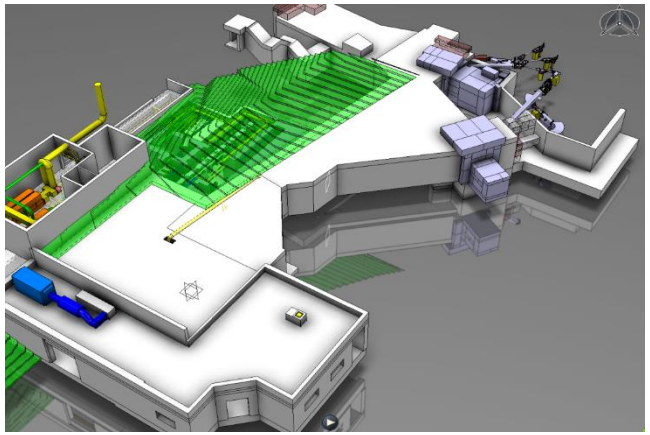

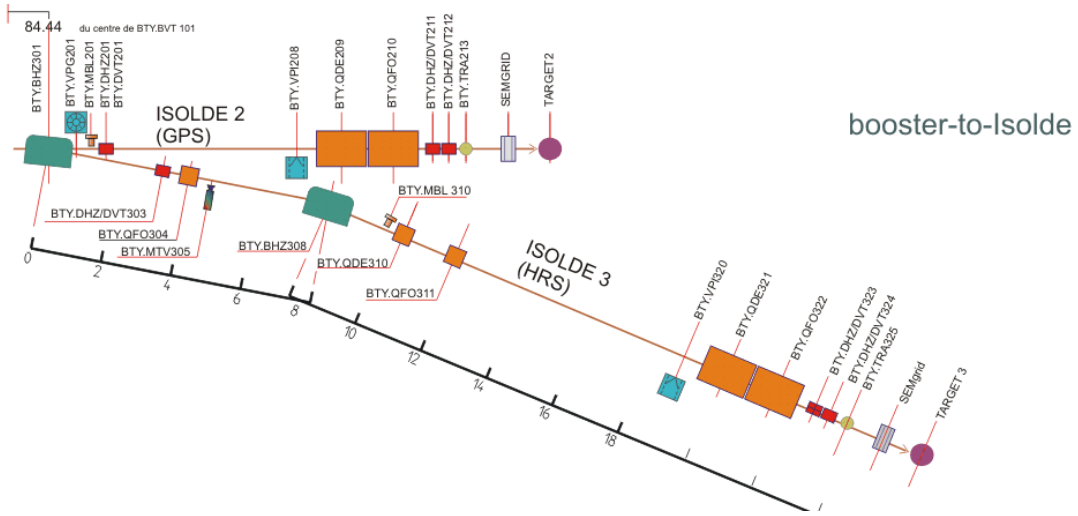

booster-to-Isolde

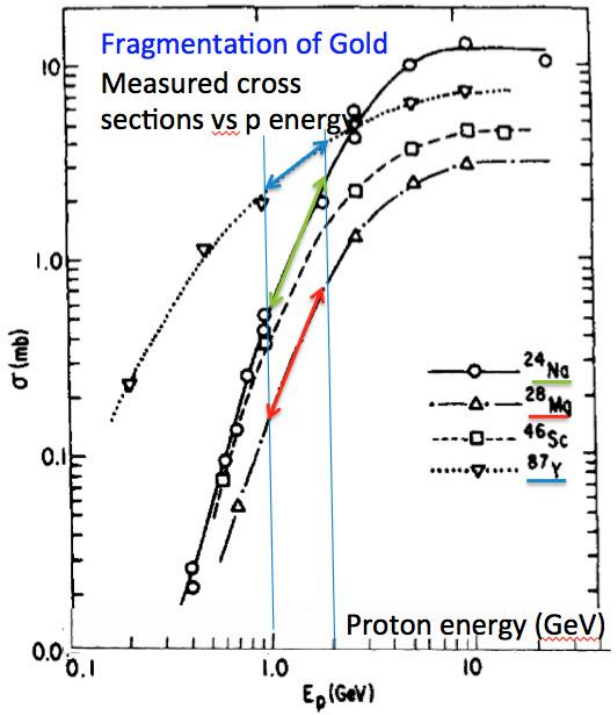

Objective 1

And improve the exploitation of the existing infrastructure

- HIE-ISOLDE post-accelerator design goal:
  beams up to 10 MeV/u, for light and heavy beams
  NOW: max 9.4 MeV/u for light beams
  max 7.4 MeV/u for heavy beams

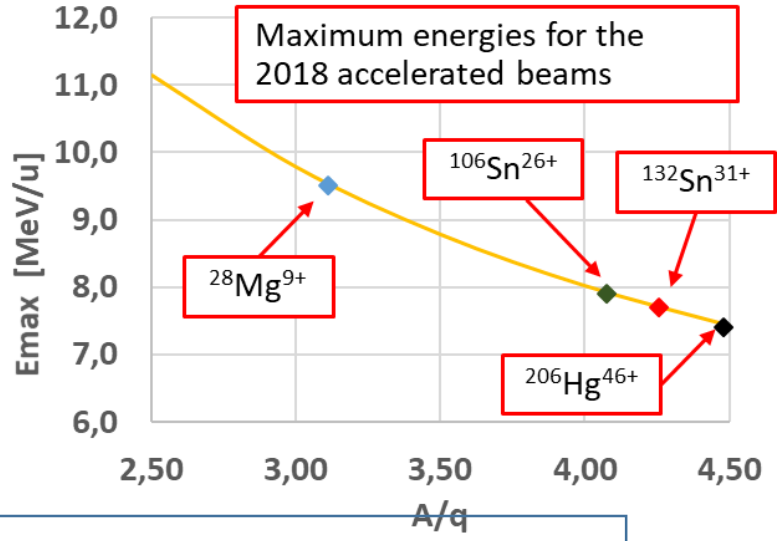

SOLUTIONS TO REACH FULL ENERGY POTENTIAL:

- ✓ **Have all cavities working after LS2 !**
- ✓ **FINALIZE the HIE-ISOLDE energy upgrade:**
  post-accelerated beams in the full (low) energy range from 0.3 and 2.8 MeV/u (most important for astrophysics experiments) and up to 10 MeV/u
  METHOD: upgrade of the (20 years old!) REX-part of the HIE-ISOLDE LINAC

Objective 2

Have multiple simultaneous and better quality beams

- GOAL: serve the ever-growing ISOLDE users community, who pursue a very diverse research program
  - in nuclear physics,
  - fundamental interaction studies,
  - atomic physics
  - nuclear astrophysics
  - material sciences
  - biochemical/ medical research

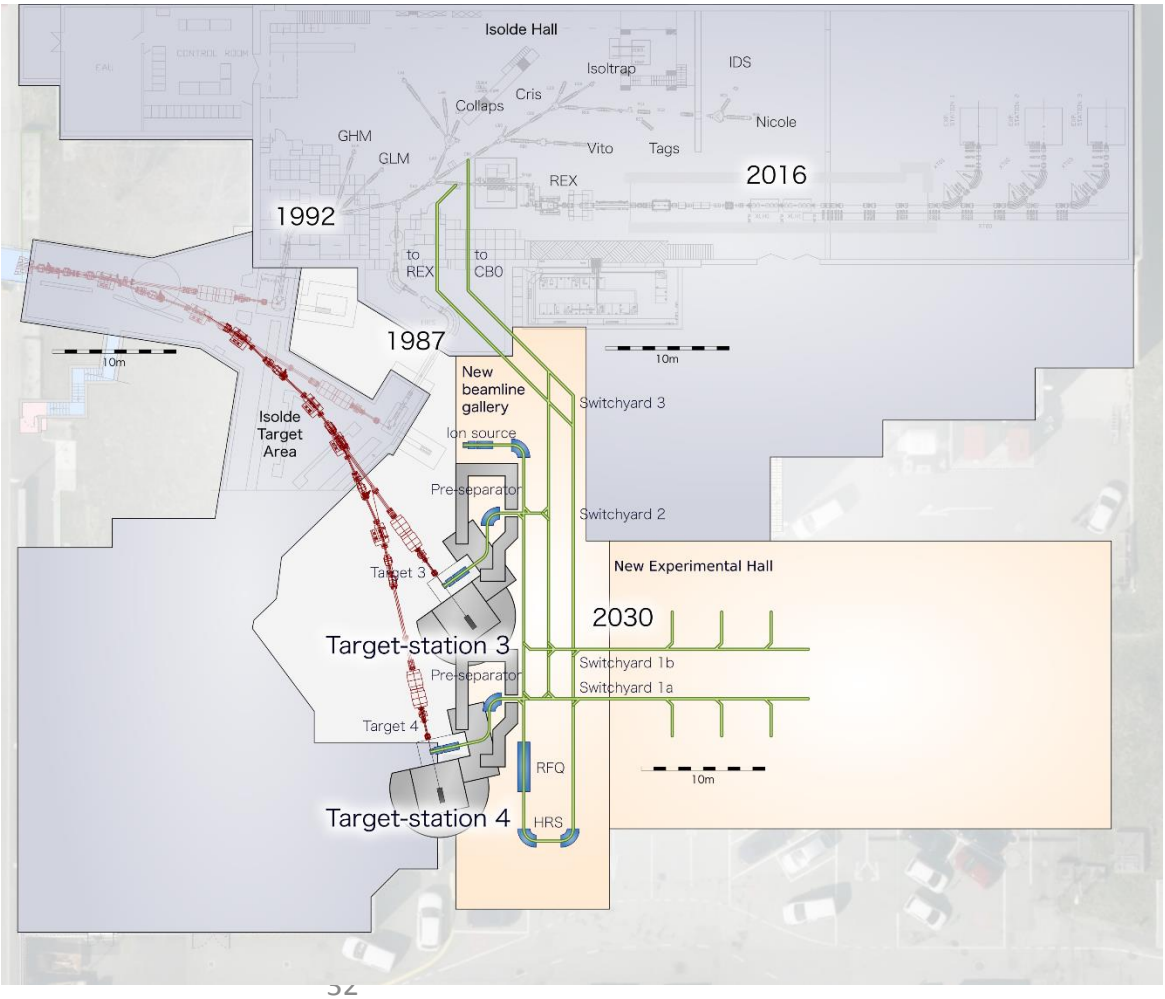

- **METHOD:**

1. **Two new additional target stations**

Preliminary design: Tim Giles, presented at the EMIS 2018 Conference, CERN

See Poster 11 at this workshop

Objective 2

Have multiple simultaneous better quality beams

➢ **METHOD:**

1. Two new additional target stations

2. A new high-resolution mass separator (state-of-the-art) to deliver purer beams (very important for HIE-ISOLDE operations)

➔ currently, some RIB's cannot be efficiently accelerated due to contamination that is too high

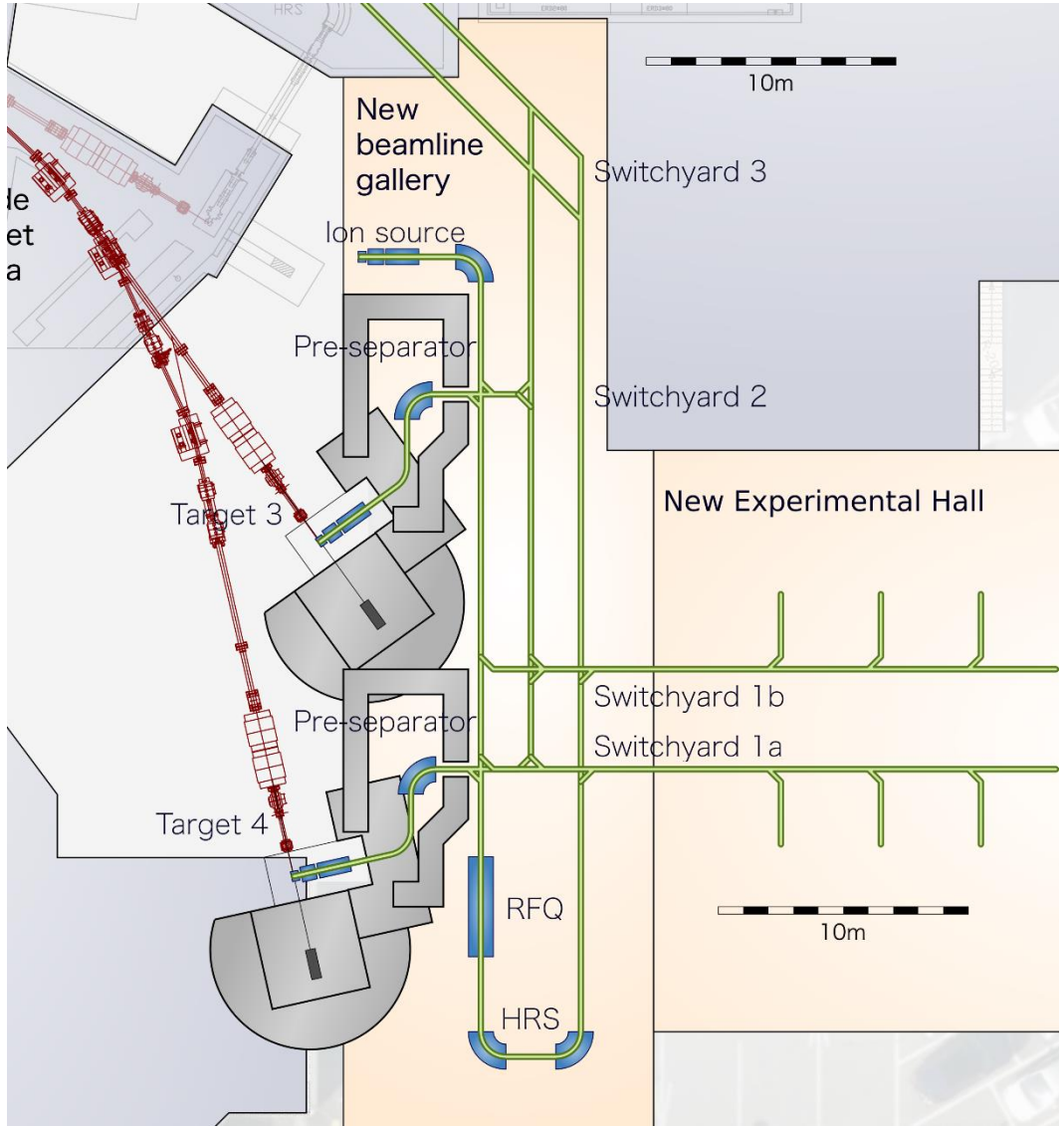

Preliminary design: Tim Giles, presented at the EMIS 2018 Conference, CERN

See Poster 11 at this workshop

Objective 3

A new compact storage ring for light and heavy ions

- Stored radioactive beams have many advantages:

  - Can be used multiple times in an in-ring detector (luminosity increase)

  - Can be cooled to deliver excellent quality beams to external experiments for high-precision studies

- **Research areas:**

nuclear ground-state properties,
reaction studies of astrophysical relevance,
investigations with highly-charged ions
studies with pure isomeric beams
(e.g. fundamental constants)

Eur. Phys. J. Special Topics 207, 1-117 (2012)

Objective 3

A new compact storage ring for light and heavy ions

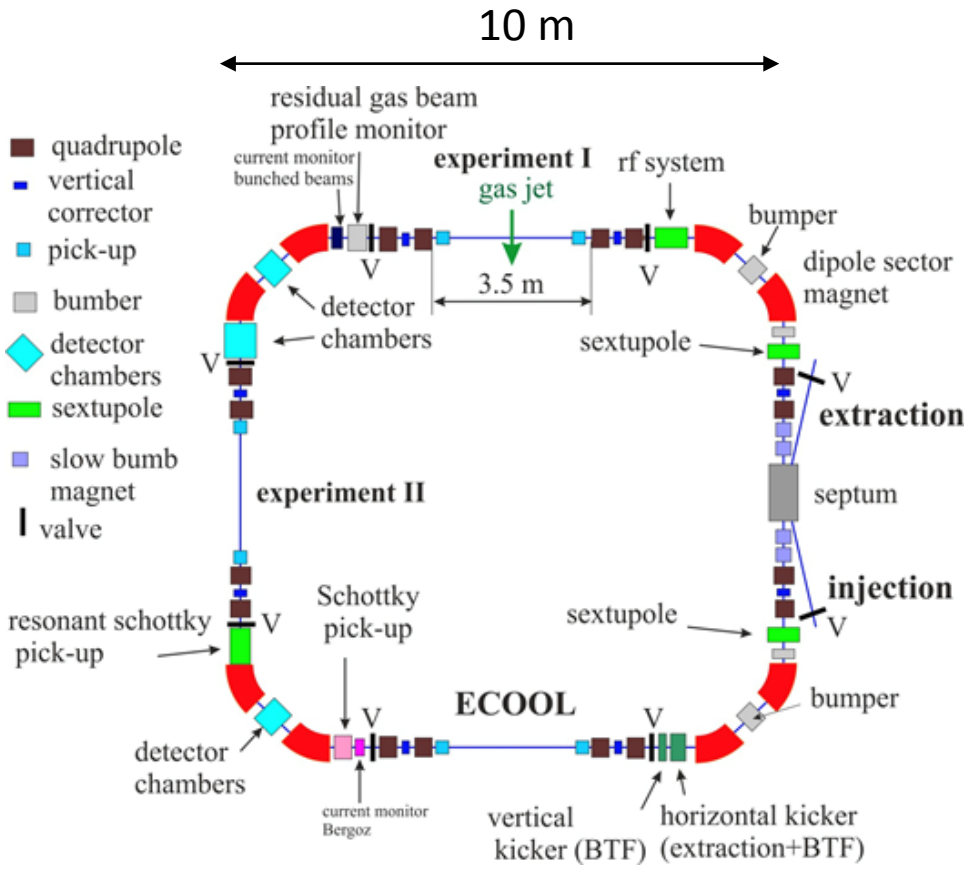

Preliminary design:
Manfred Grieser, MPI-K Heidelberg

Preliminary integration in ISOLDE:
Erwin Siesling

Possible ISR integration

Impact on Physics

- Most of HIE-ISOLDE and many ISOLDE proposals suffer from low intensity ➔ **unnecessary prolongation of beam times.**
- **New and more exotic species will be available** with the increase of intensities: **from x2-x5** for fragmentation, x1 – x2 for fission, **x6-x10** for spallation.
- Exploit the **full range of energies** of HIE-ISOLDE by implementing Phase 3 of the project
- Several HIE-ISOLDE experiments cannot reach full intensity due to contamination in the ISOLDE beam ➔ **need better beam purification (new HRS mass separator, …)**
- New target stations will allow **operation of low-energy and high-energy experiments**, more than doubling the available beam time.
- **Multi usage** and **cooled beams** from the storage ring

End of Run 2 party

- Building 508 at 16:30 tomorrow
- You are all invited