CERN

European Organization for Nuclear Research
Organisation Européenne pour la Recherche Nucléaire

Forum on Material and Surface Technologies

November 21, 2008

Technology and licensing opportunities for Surface Etching

Emir Sirage,
DSU-TT
emir.sirage@cern.ch

Outline

1. Know-How

- Transfer Opportunity

2. Micro-ChemicalVias (µCV) technology

- Transfer Opportunity

3. Gas Electron Multiplier (GEM) technology

- Transfer Opportunity

Intro

Silver medal for DEM/PMT (Photolithography and Microconnectics Technologies) spin-off at Salon des Inventions, Geneva 2007

"The company TTA Techtra was awarded a silver medal for the Micro-Chemical-Vias (MCV) prototypes designed and built in collaboration with CERN"

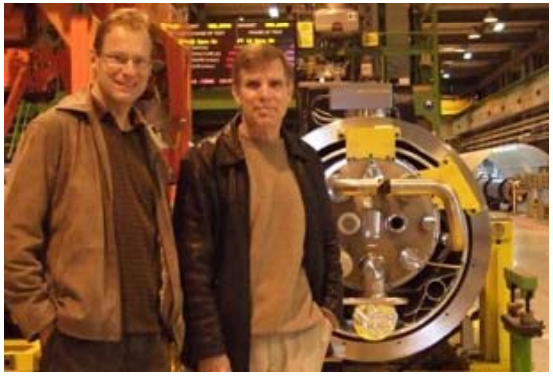

Joe Fjelstad, inventor and authority on flex circuits
Real-time online magazine (www.pcb007.com)

"Innovation in the realm of electronic interconnects is alive and well in Europe. Perhaps it's nowhere more the case than it's at CERN"

1. Know-How

IP Status

- Know-how available
  - Fine-line PCBs
    - Large size fine line single side PCBs
  - Large size PCBs

Distinctive features

	Industry	CERN
Fine line PCBs	70µm	**20-15µm**
Large size fine line single side PCBs	250x250mm	**700x150mm**
Large size PCBs	500x500mm	**2mx600mm**

Services & Consultancy

- Know-how available for Consultancy

2. Micro-ChemicalVias (µCV) technology

IP Status (ref. number: WO03055288)

- Priority date: 20.12.2001
- Granted in France, Japan, Russia, Taiwan, US

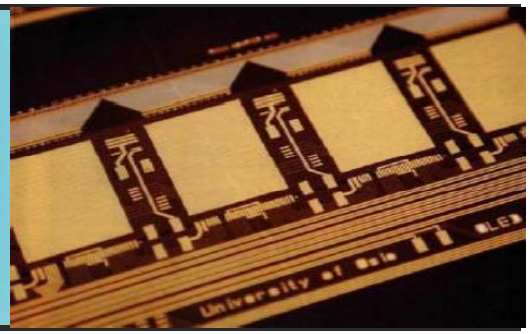

Stage

- Fully developed process
- Used by CERN PCB manufacturing workshop (TS/DEM) – for HEP needs

Key Advantages

- Easy process compatibility with standard PCB assembly line
- Low initial investment : **15'000€ compared to : Laser option = 600'000€**

Competitive advantages	µCV	Plasma	Laser
High volume production	**Very good**	Reasonable	Less good
Etching time	**9-18min**	30-60min	n.a
Minimum Via Diameter	**20-40µm**	50µm	30µm

µCV

Current Applications

- CERN:
  - PCboards and detectors
- Industry:
  - PCboards

Expected Applications

- MEMS systems
- Digital and video cams
- Portable devices (Mobile phones and portable PCs)

Licensing opportunity

- Geographical exclusivity granted covering Poland
- Licenses available
  - *Desired licensee: PCB manufacturer*
- **License fees** dependent on business model. Normally **upfront lump-sum**, and **royalties based on commercial activity**.

3. Gas Electron Multiplier (GEM) technology

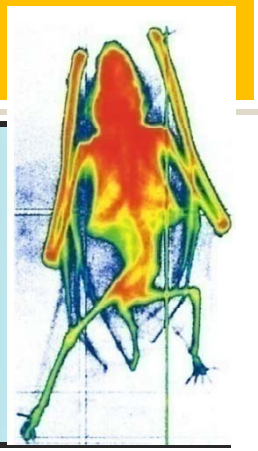

IP Status (ref. number: WO9921211)

- Priority date: 22.10.1997
- Granted in US, Canada, Europe

Stage

- Fully developed technology: GEM foil is used as a gaseous detector
- Manufactured by CERN PCB workshop (TS/DEM) – for HEP needs

Key Advantages

- Robust, flexible, low cost
- Reliable for positioning and detecting ionizing radiation (charged particles: neutrons, photons, gamma and X-rays for physics experiments)

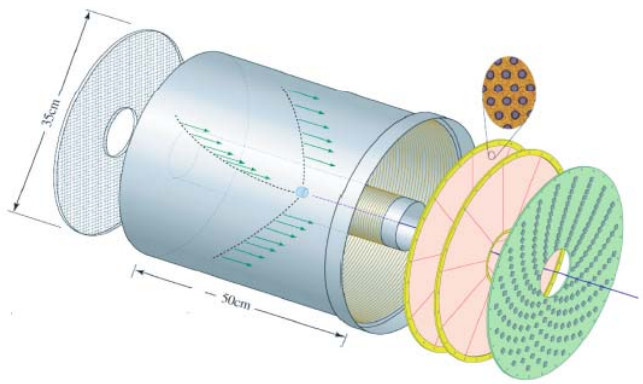

GEM

Current applications (outside HEP)

Neutron Physics Detector	X-Ray Detector system	Radiation detection system	Beam monitoring system - RT
		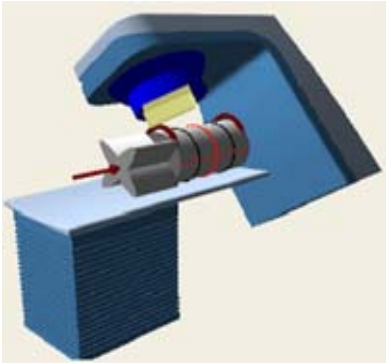	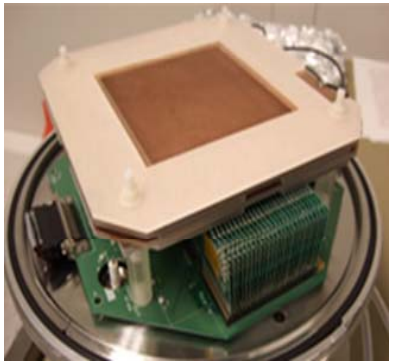

Licensing opportunity

- Field of exclusivity granted for "Dosimetry in water phantom"
- Standard License available
  - *Desired licensee: Willing to manufacture and sell GEM foils or GEM based-products*

Thank you for your interest!!!

For further information please contact

emir.sirage@cern.ch

our visit our web-site

http://technologytransfer.web.cern.ch/TechnologyTransfer/