LHCspin

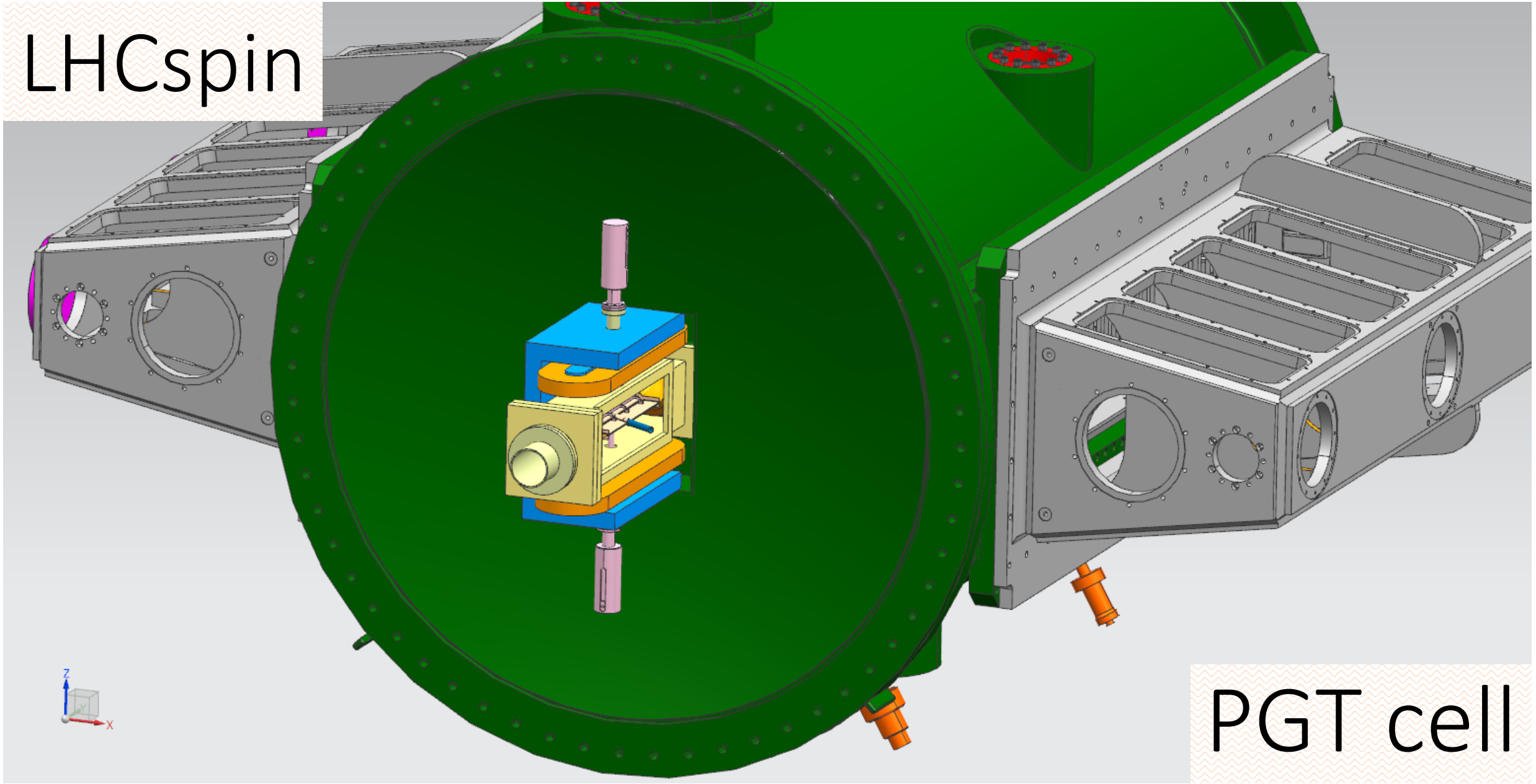

PGT cell

LHCb CAVERN

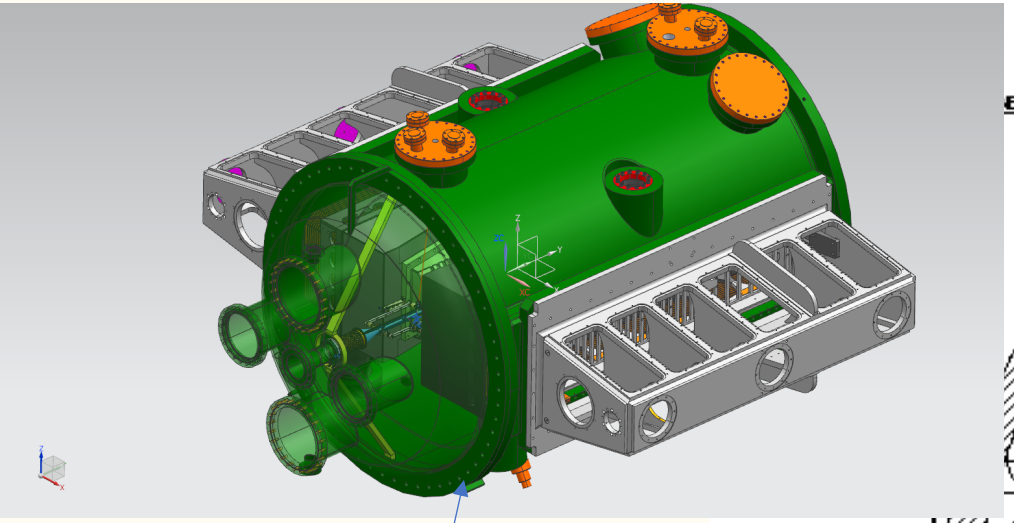

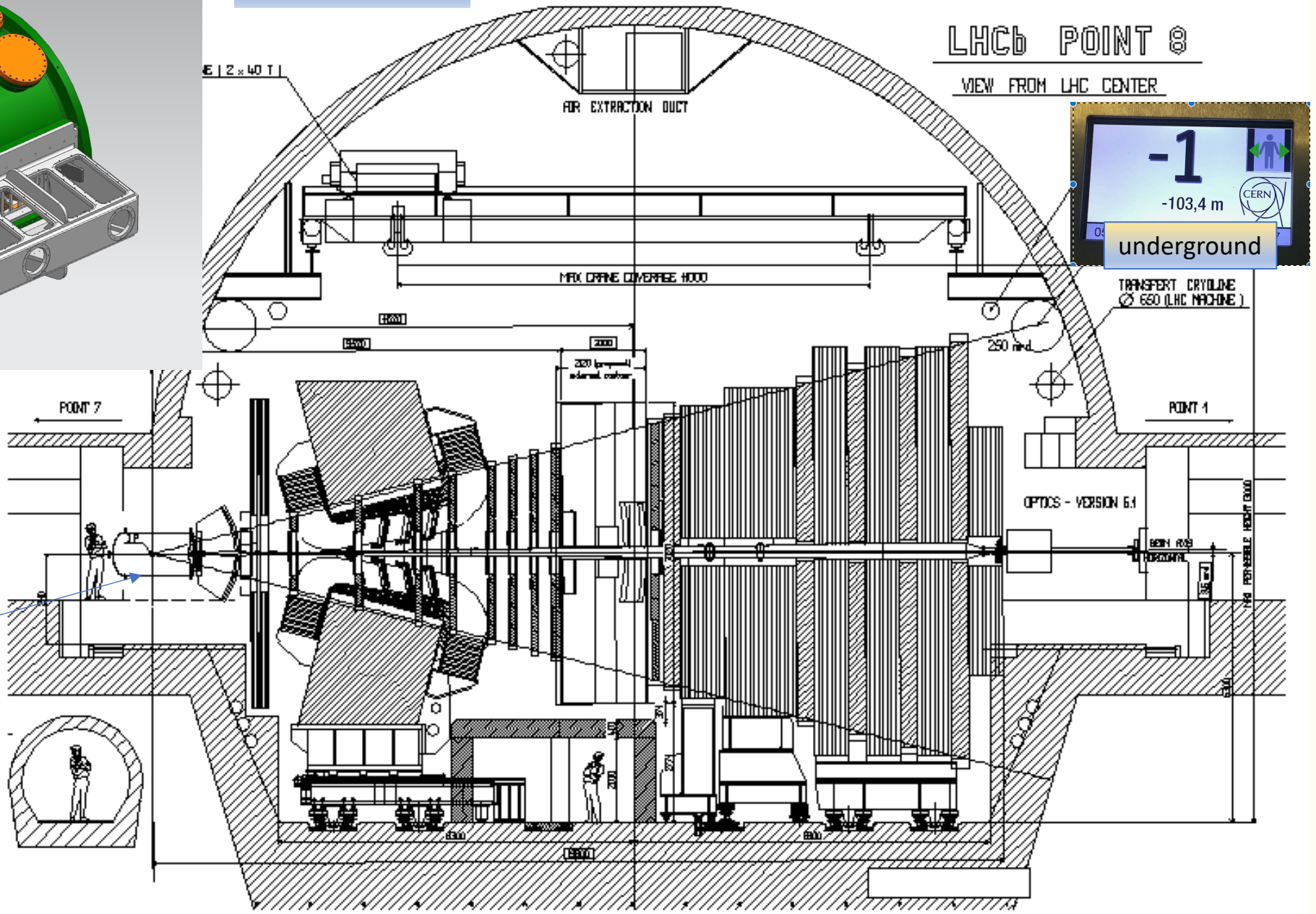

SMOG2 + VELO DETECTORS

CELL POSITION -1

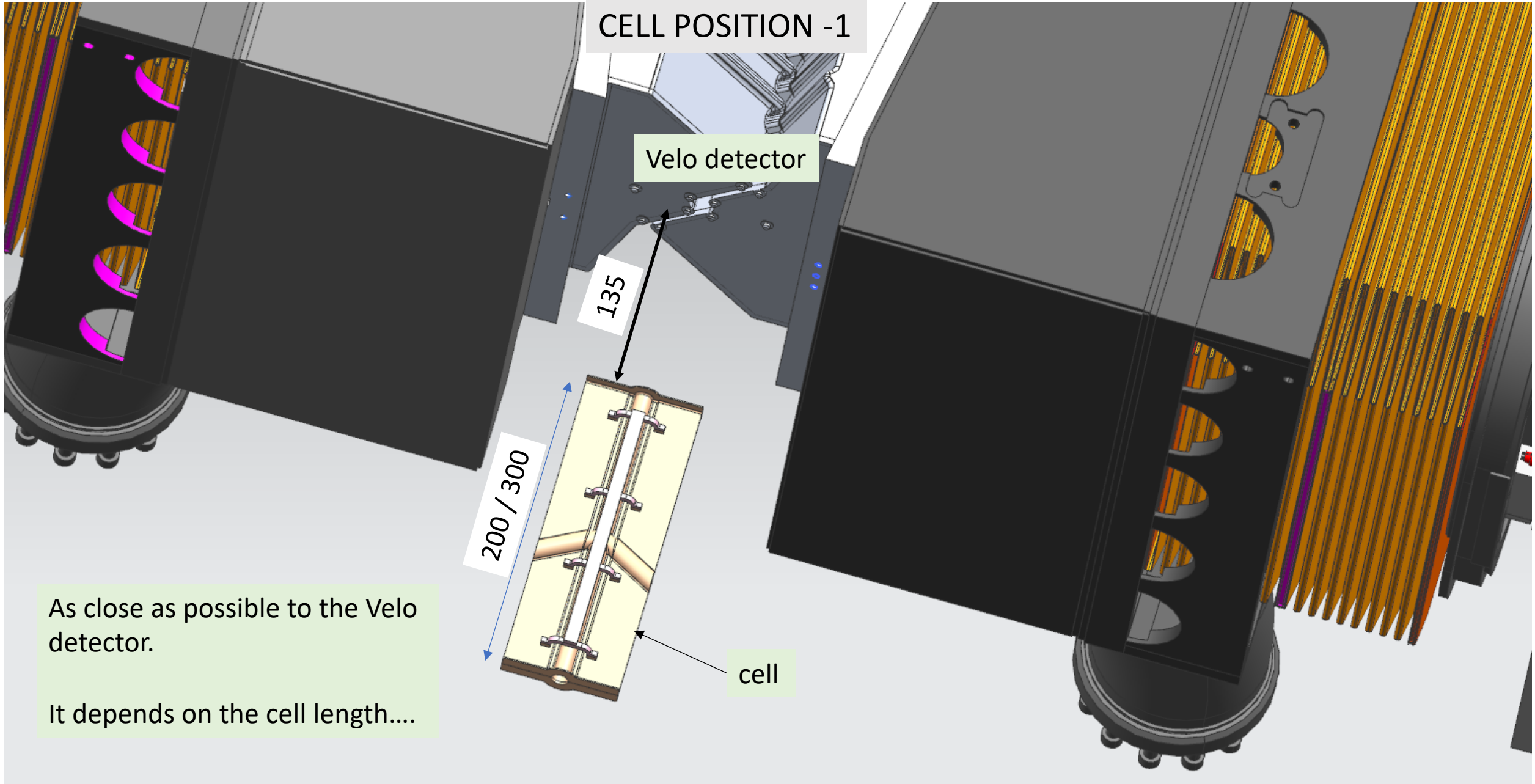

As close as possible to the Velo detector.

It depends on the cell length….

CELL POSITION - 2

…..and on the magnet length

Field uniformity : 300 mT +/- 10%

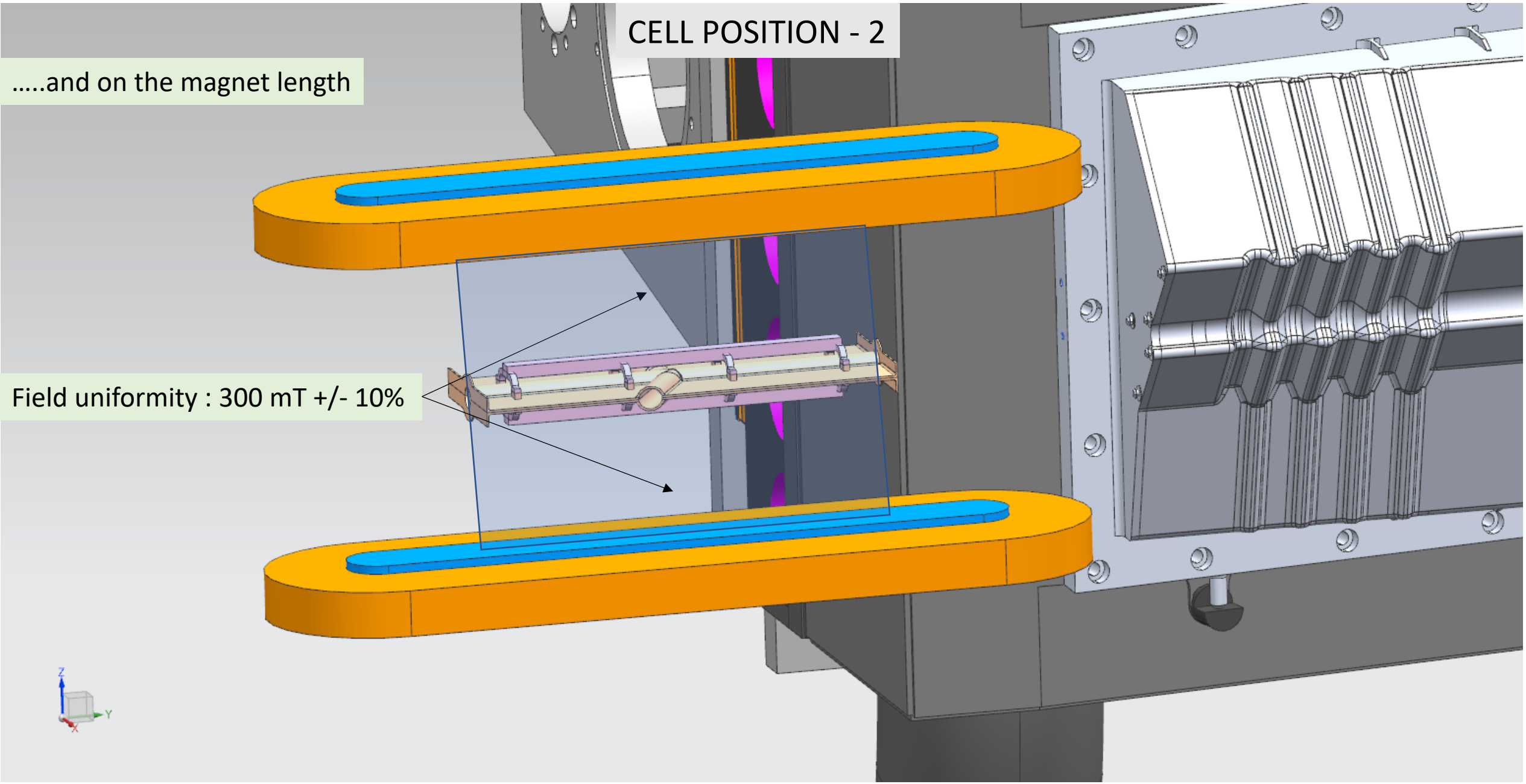

ELECTRICAL CONTINUITY & SHIELD – VELO DETECTOR

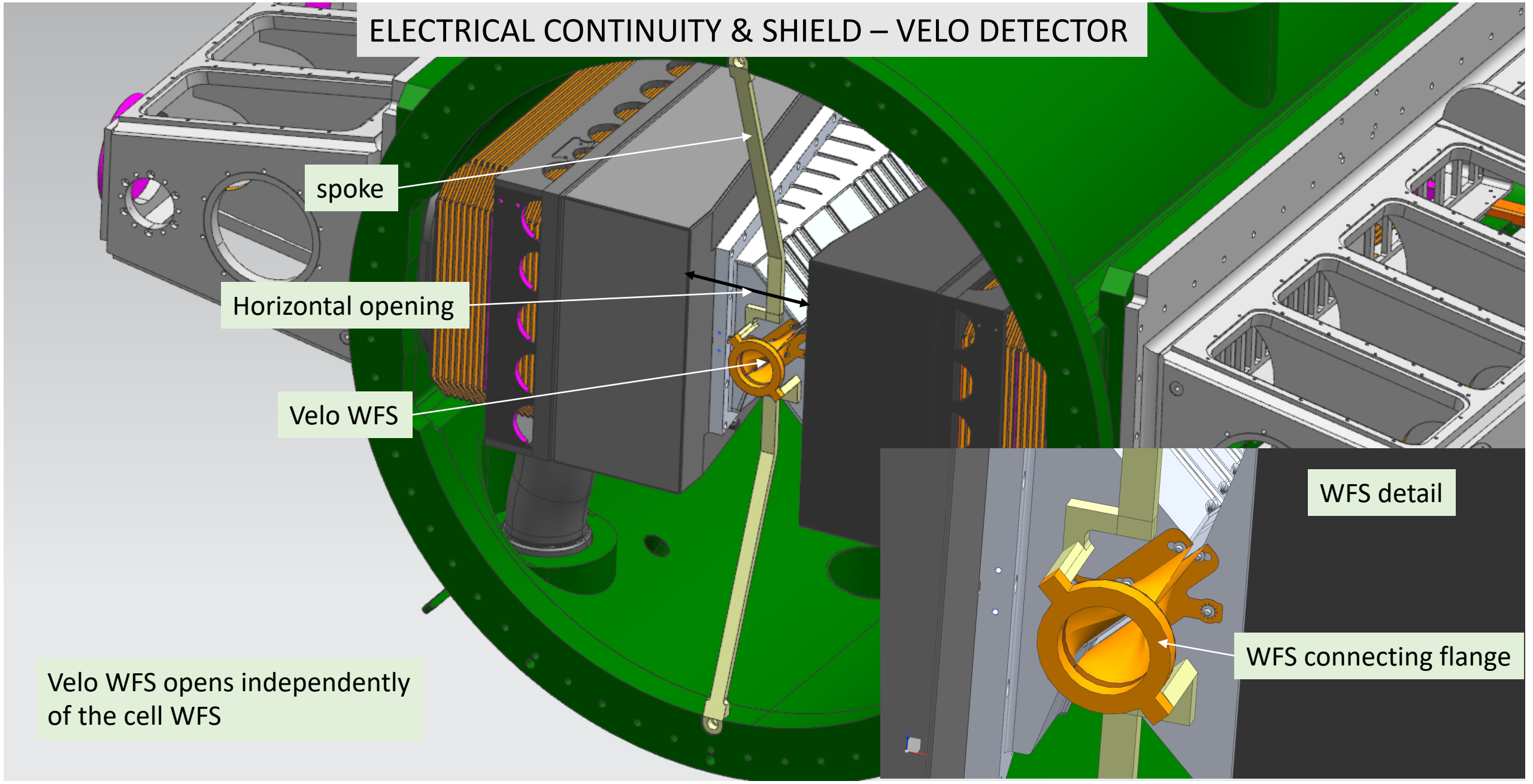

Velo WFS opens independently of the cell WFS

UPSTREAM SPHERICAL FLANGE SEPARATING THE VELO FROM THE PGT CELL

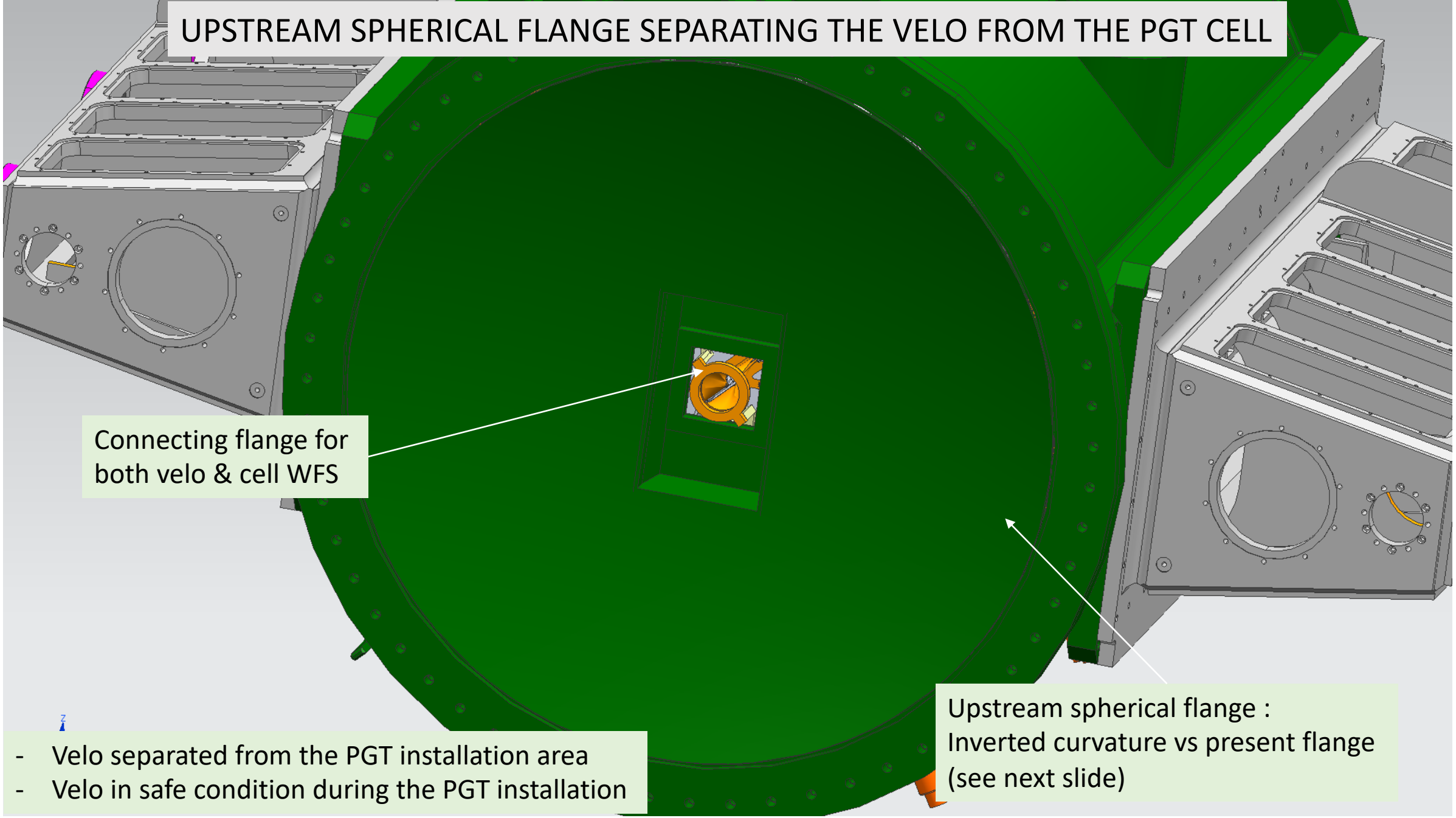

- Velo separated from the PGT installation area
- Velo in safe condition during the PGT installation

Vertical cross section view

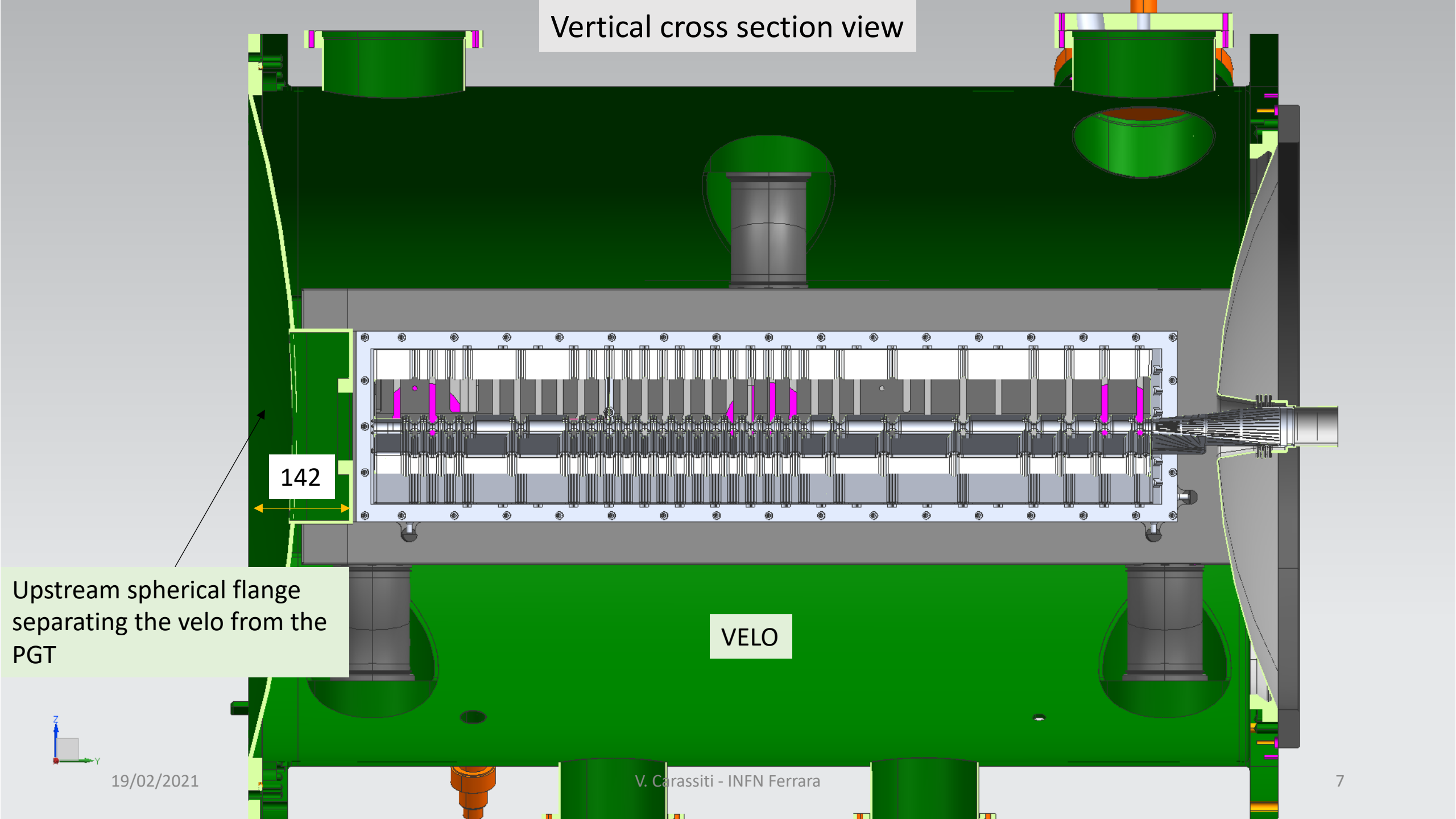

Upstream spherical flange separating the velo from the PGT

Vertical cross section detail

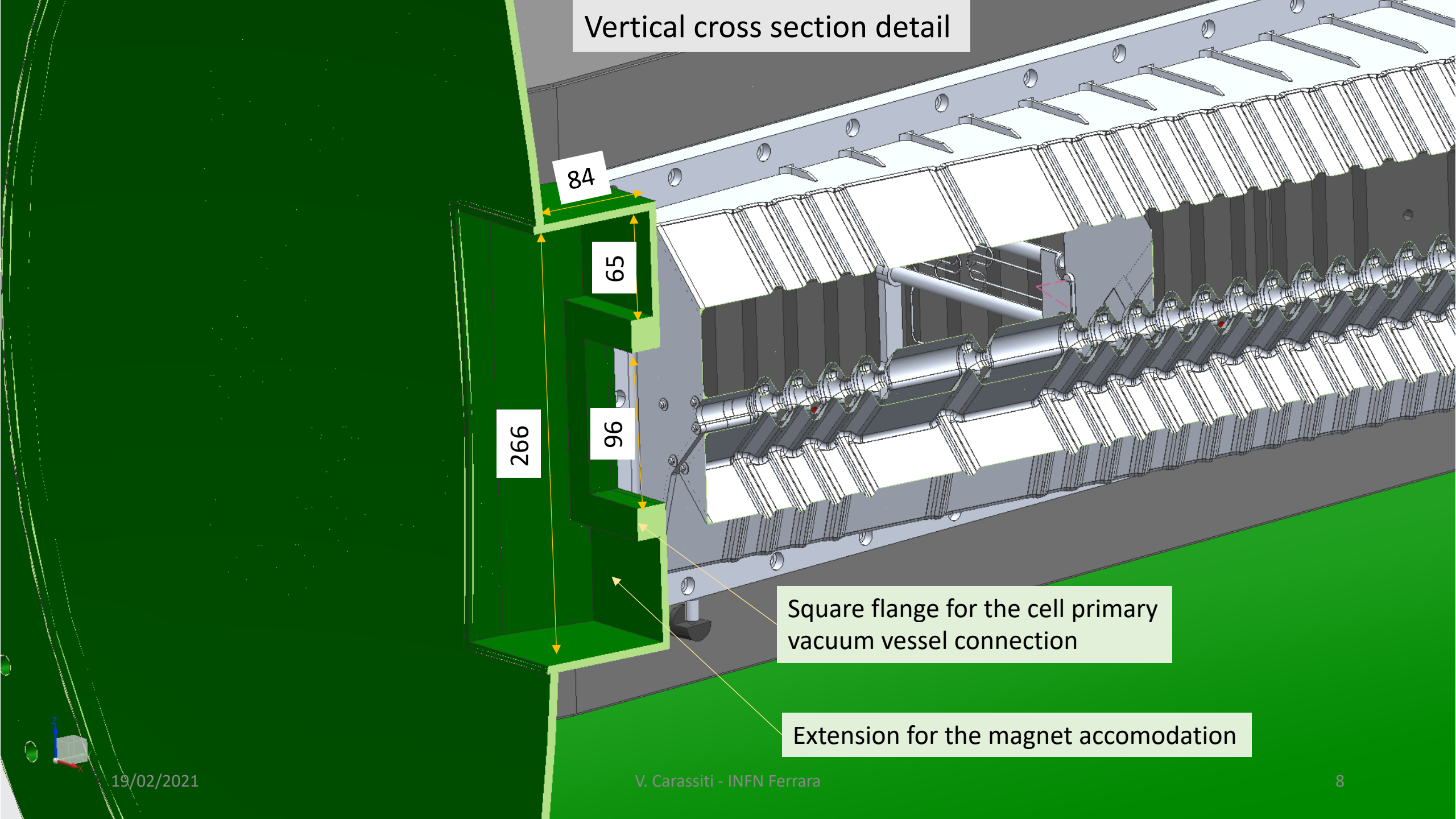

Horizontal cross section detail

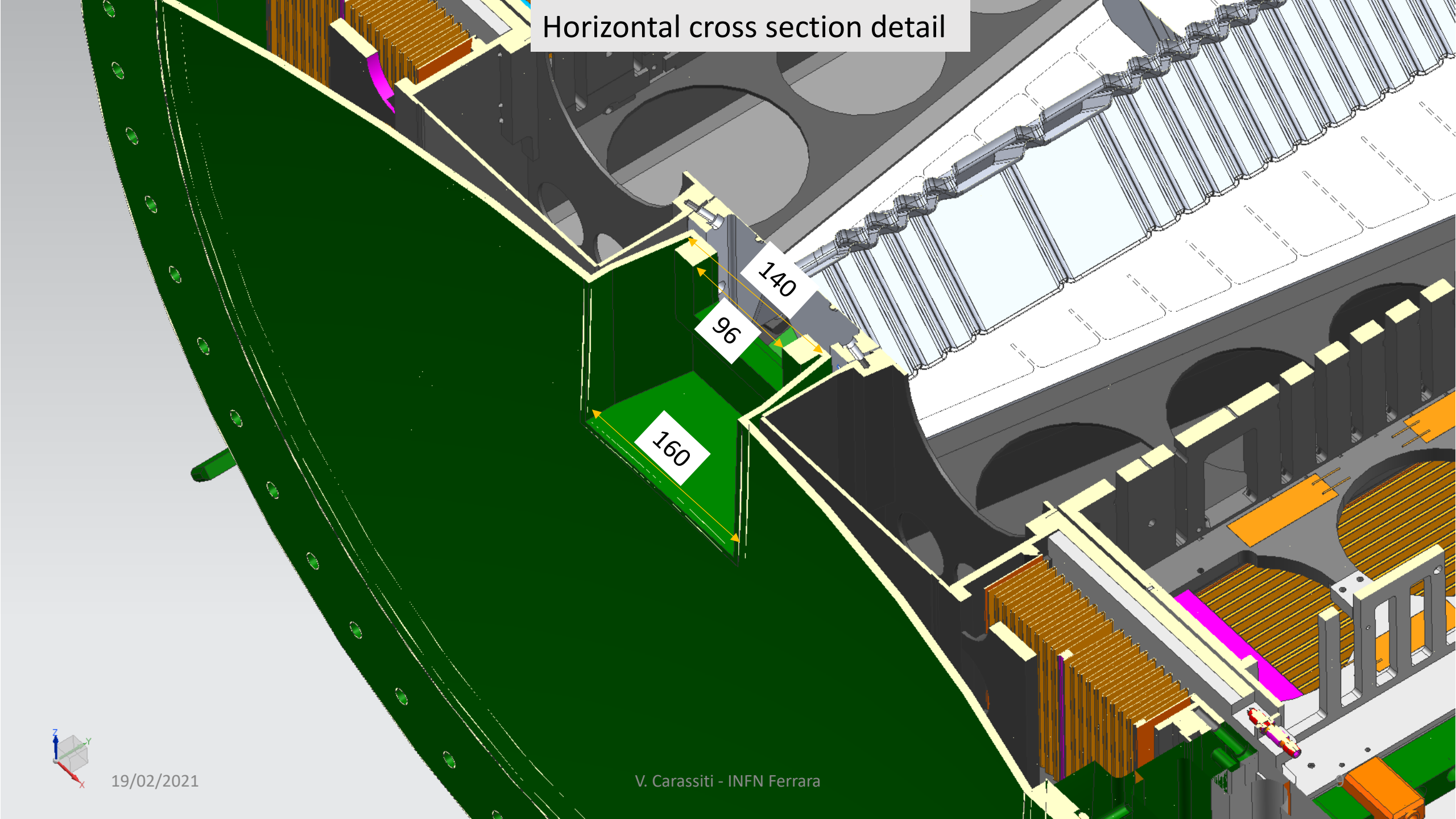

ELECTRICAL CONTINUITY & SHIELD – PGT CELL

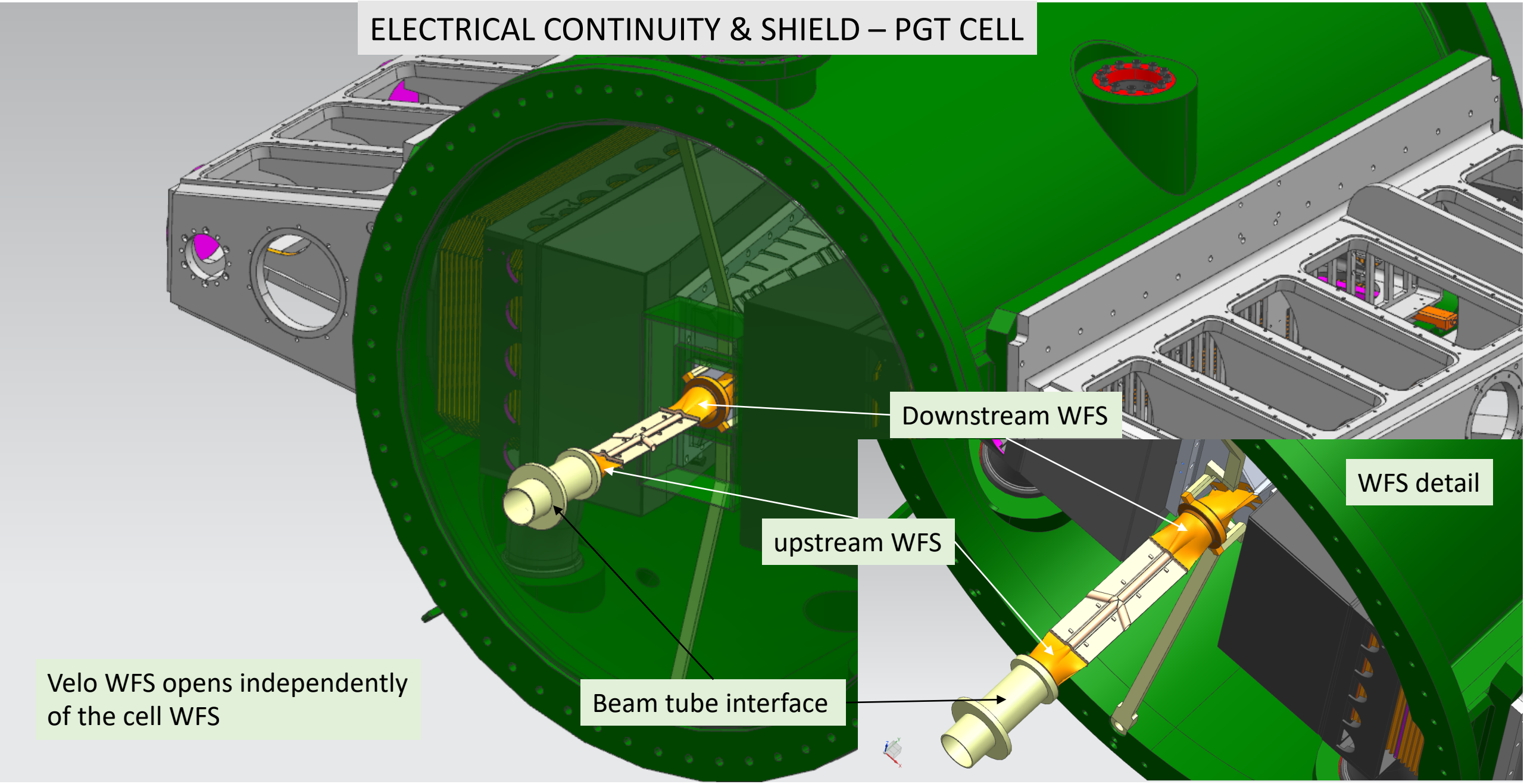

Velo WFS opens independently of the cell WFS

PGT CELL WORKS IN THE PRIMARY VACUUM

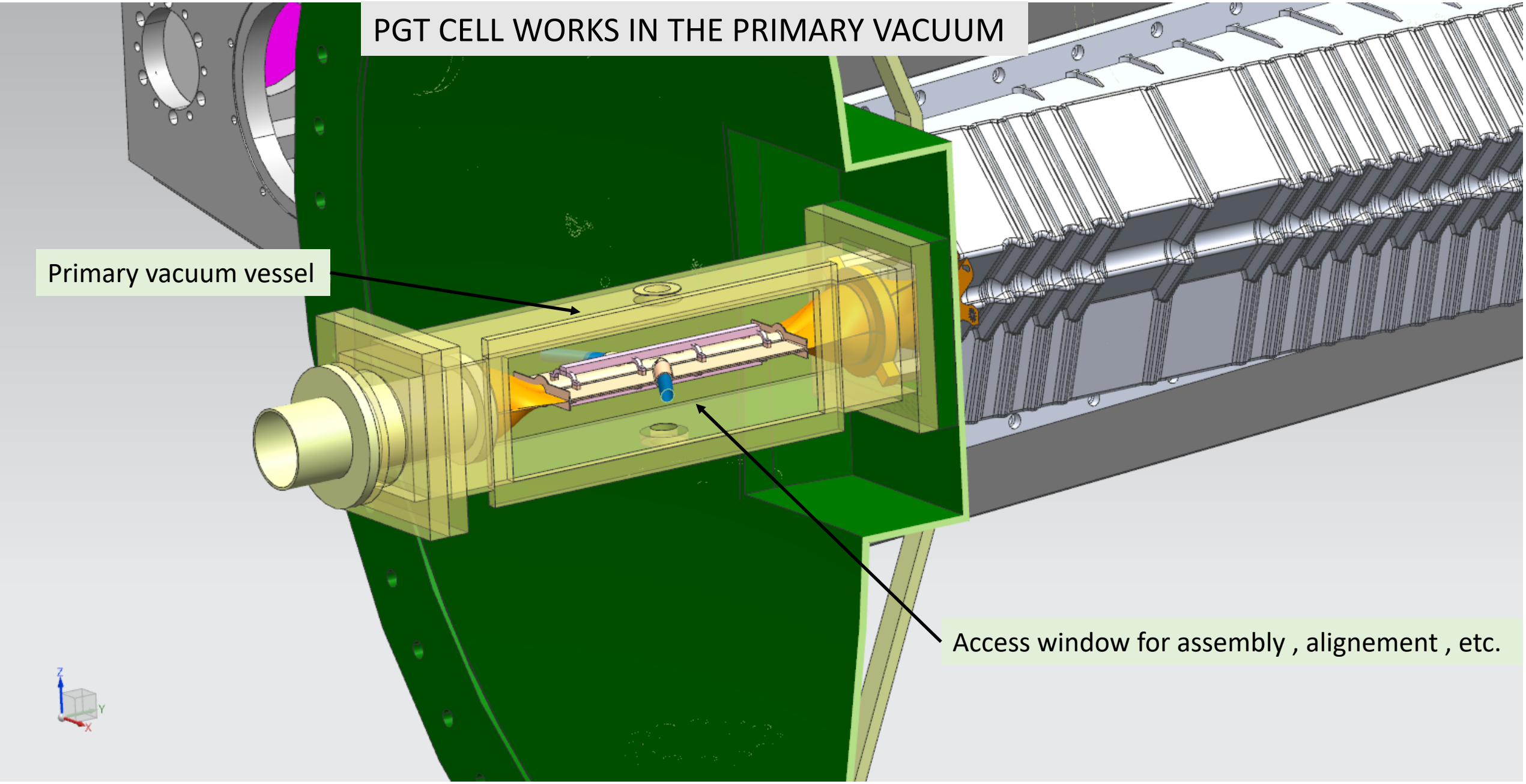

MAGNET INFO FOR THE CELL ACCESS

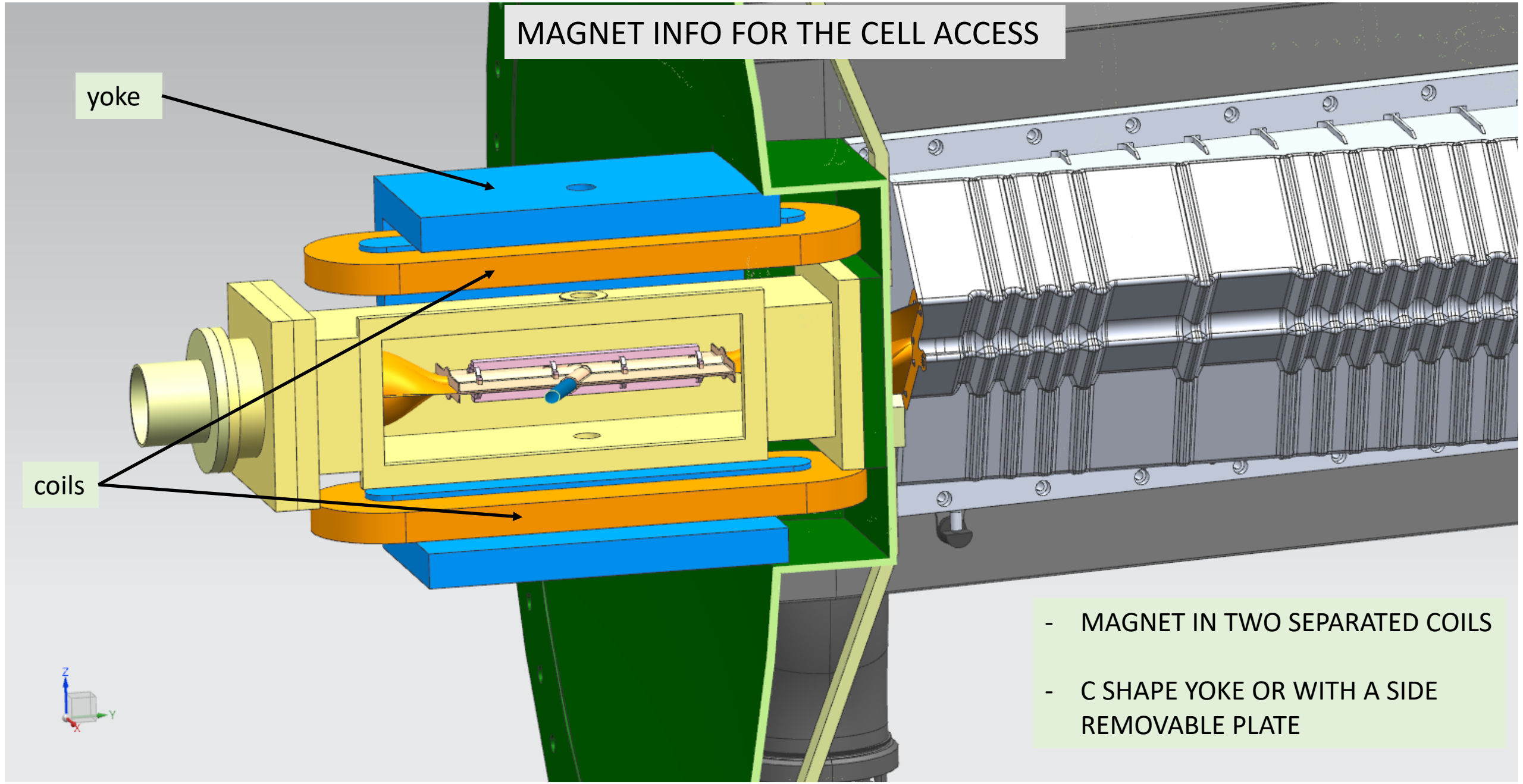

- MAGNET IN TWO SEPARATED COILS
- C SHAPE YOKE OR WITH A SIDE REMOVABLE PLATE

FEED THROUGH SERVICES

FEED THROUGHS:
- ABS x 1
- BRP x 1
- Ugfs x 1
- Motors x 2
- Thermal sensors x 1

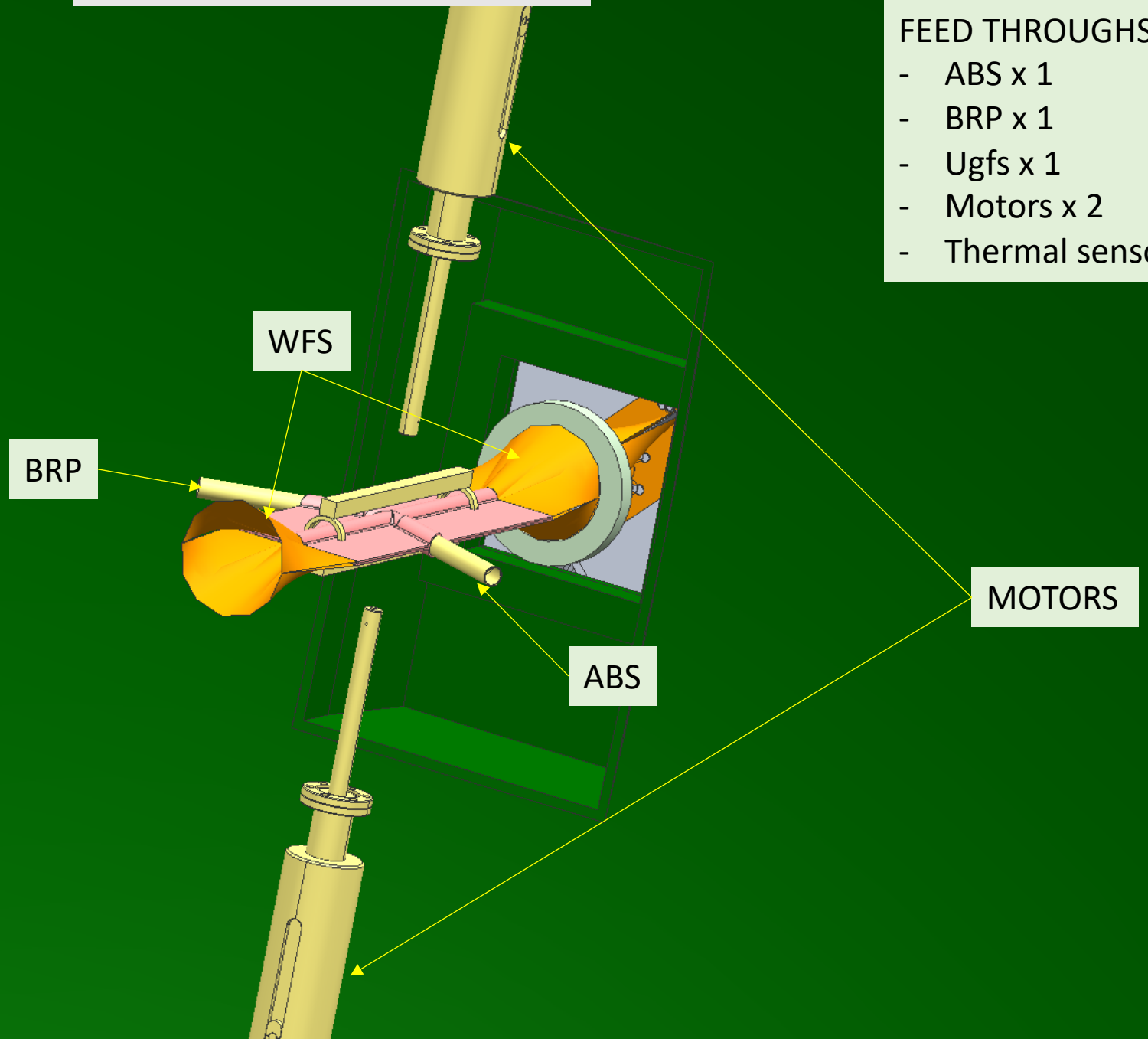

PGT INSTALLATION AREA

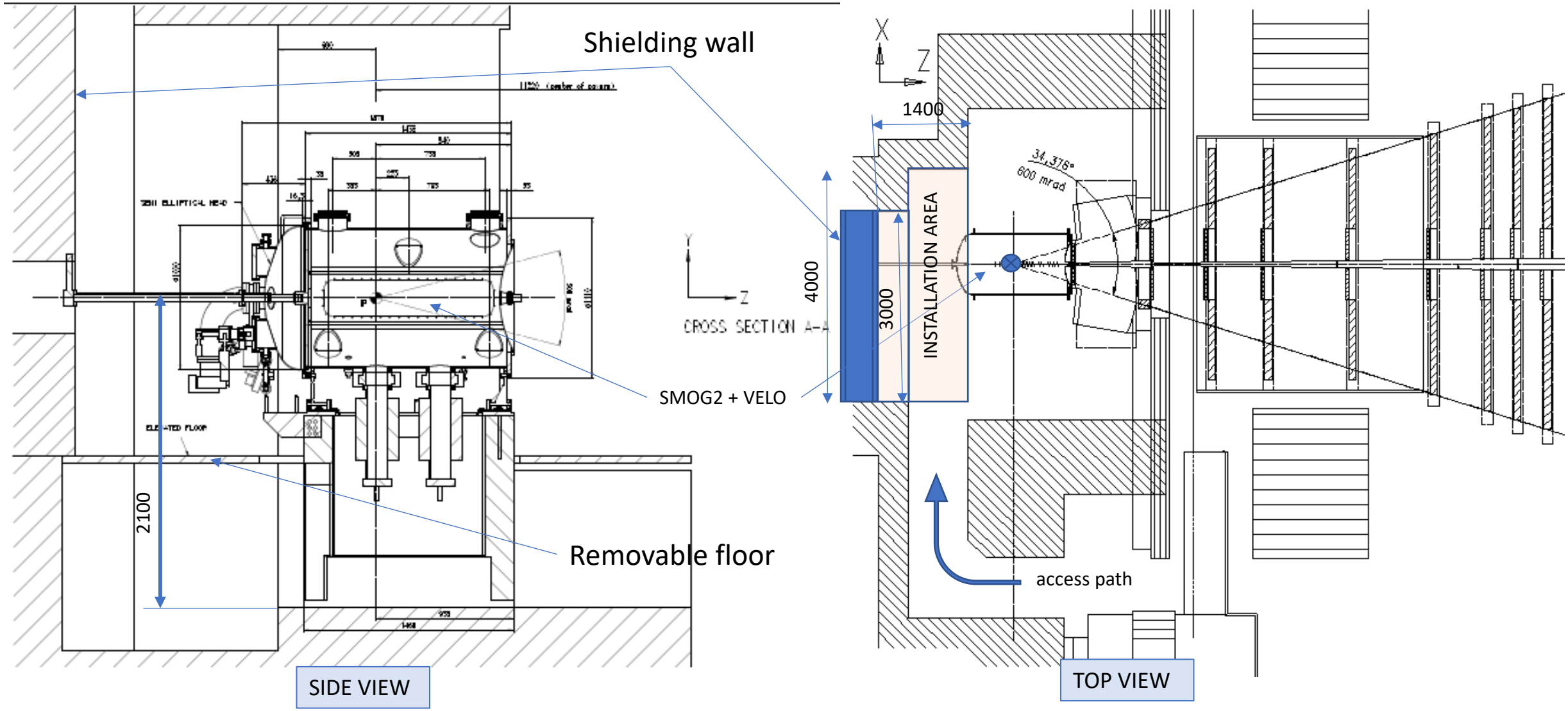

ABS & BRP IN HORIZONTAL LAYOUT – TOP VIEW

- HARD TO FIND A CONFIGURATION FITTING THE AREA
- ABS & BRP SHOULD RESPECT THE SKETCH DIMENSIONS
- WALLS & LUMINOMETER CONSTRAINTS
- SPACE FOR THE FRAME SUPPORTING THE PGT DETECTOR
- SPACE FOR THE ASSEMBLY & HANDLING OF THE PARTS

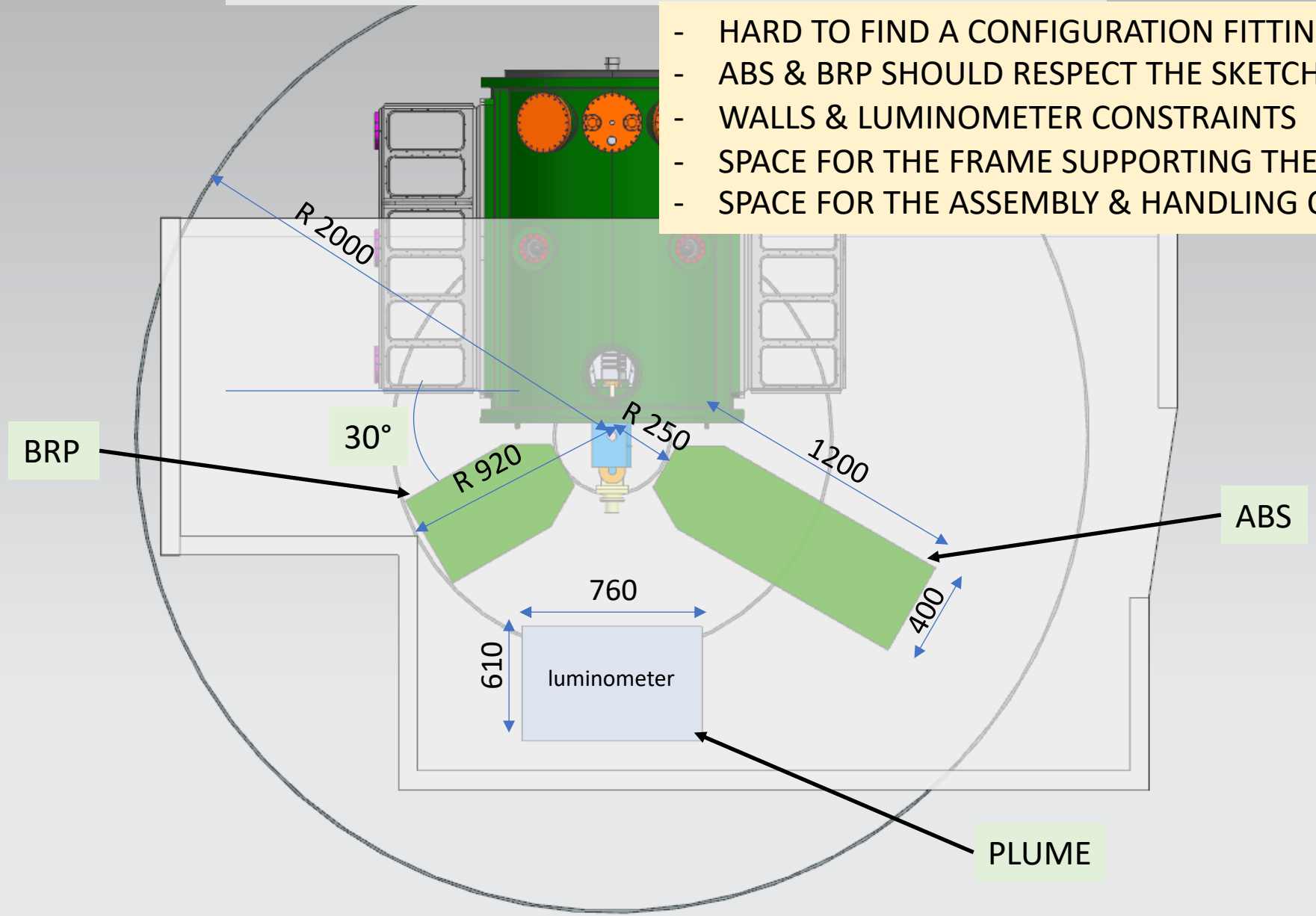

ABS & BRP IN HORIZONTAL LAYOUT - SIDE VIEW

MORE FREEDOM IN THE VERTICAL DIRECTION

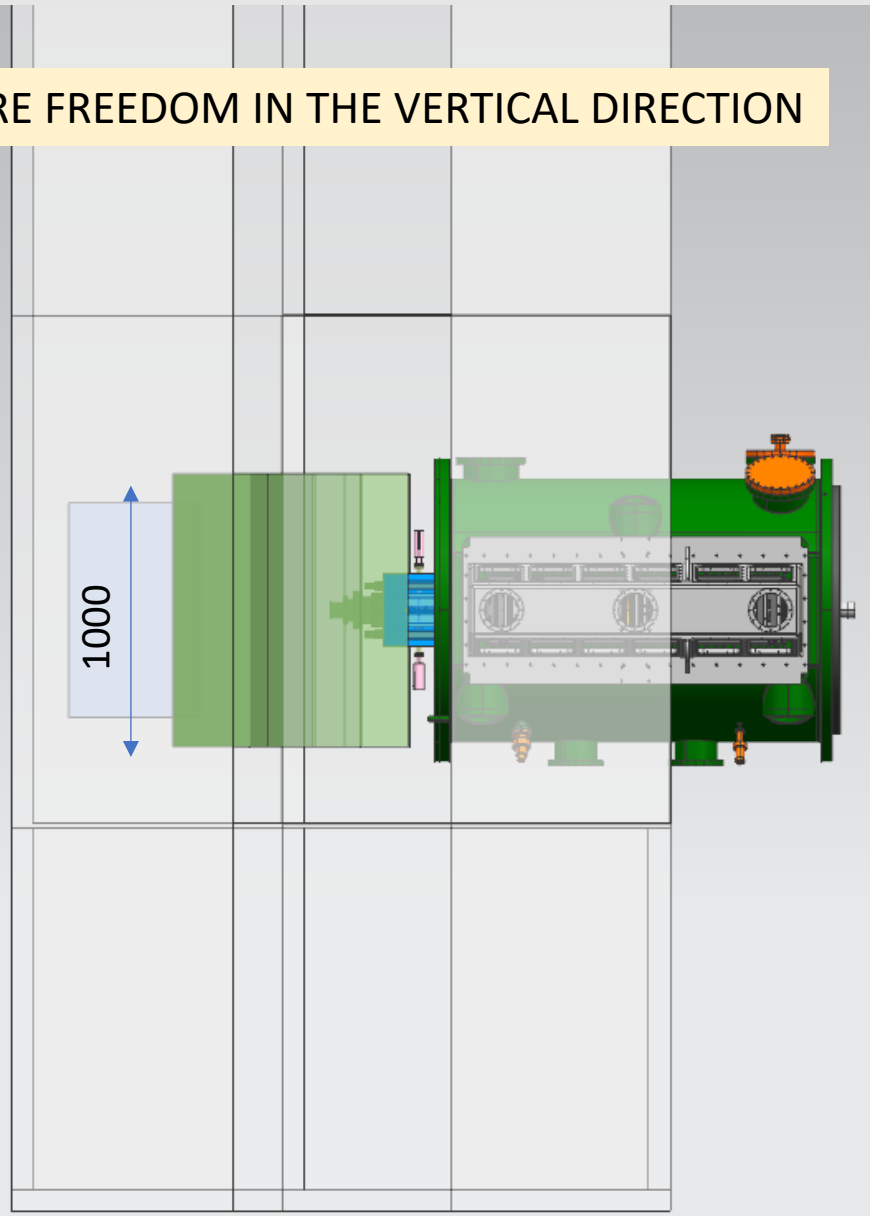

ABS & BRP HORIZONTAL LAYOUT : THE CELL OPENS VERTICALLY

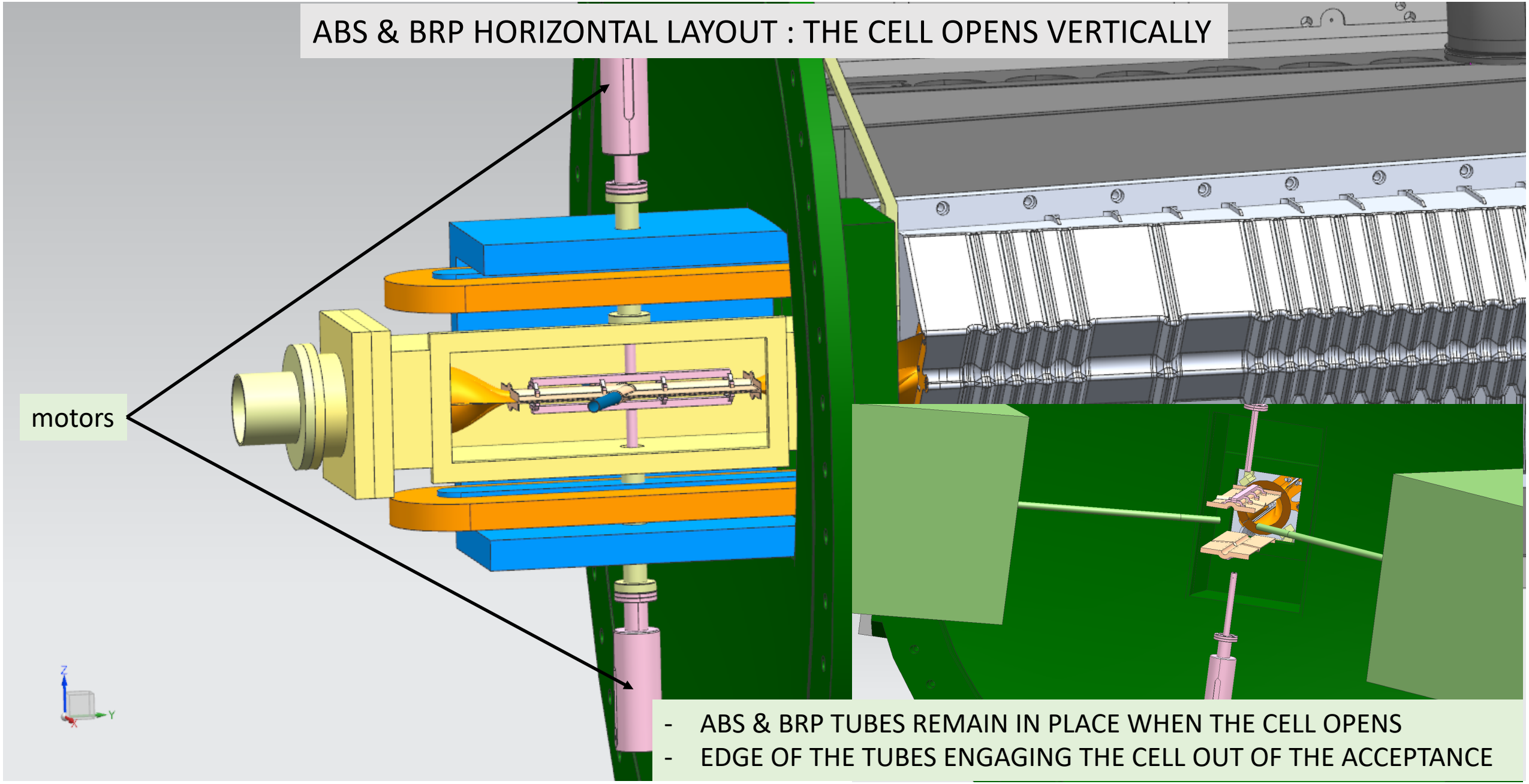

- ABS & BRP TUBES REMAIN IN PLACE WHEN THE CELL OPENS
- EDGE OF THE TUBES ENGAGING THE CELL OUT OF THE ACCEPTANCE

ABS & BRP IN VERTICAL LAYOUT – SIDE VIEW

- A FITTING CONFIGURATION IS CRITICAL ON THE BOTTOM SIDE
- SPACE FOR FRAME , ASSEMBLY & HANDLING OF THE PARTS IS EASIER

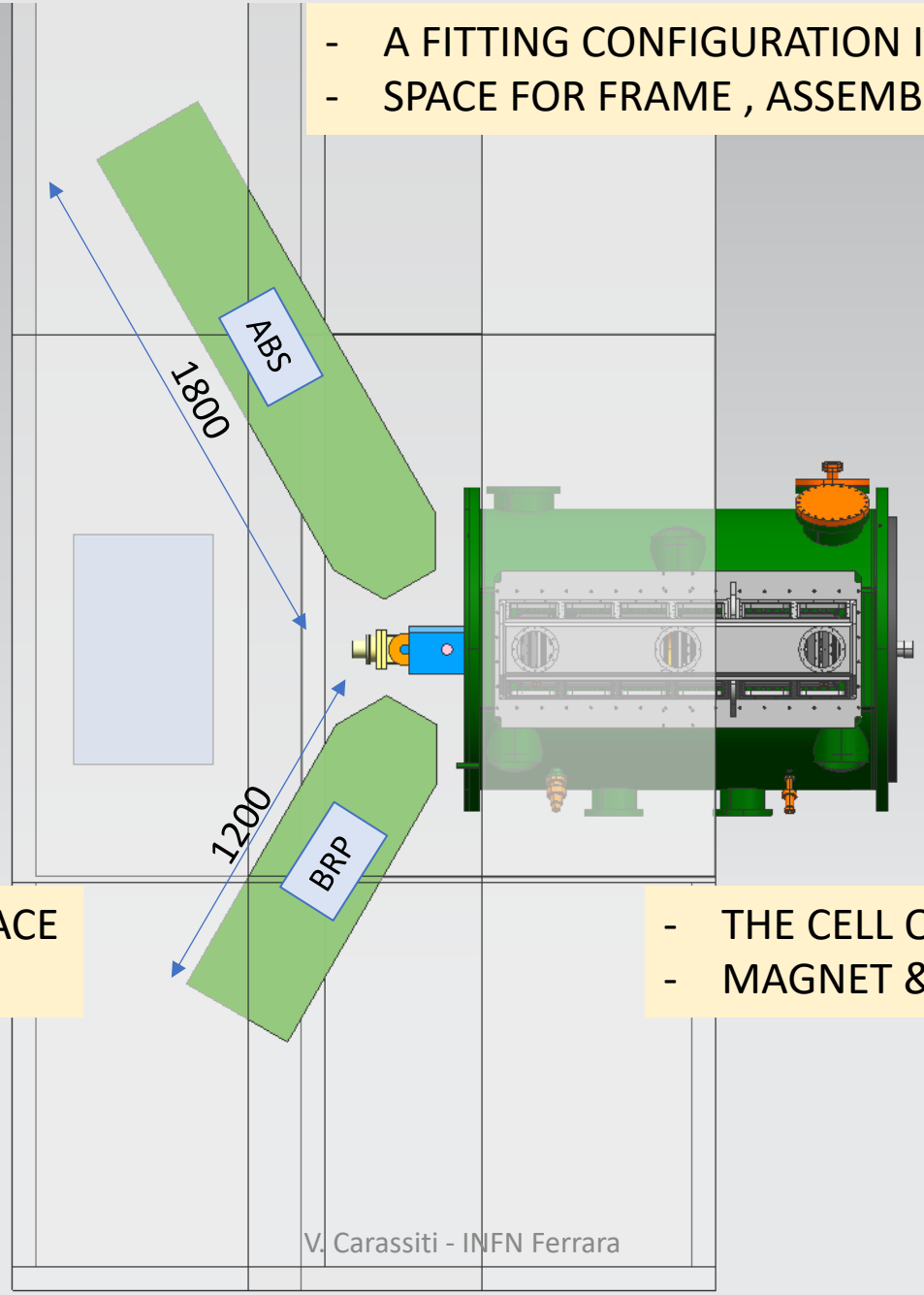

A SURVEY CHEKING THE ALLOWABLE SPACE OF BOTH CONFIGURATIONS IS NEEDED

- THE CELL OPENS HORIZZONTALLY
- MAGNET & PRIMARY VACUUM VESSEL ROTATE 90°
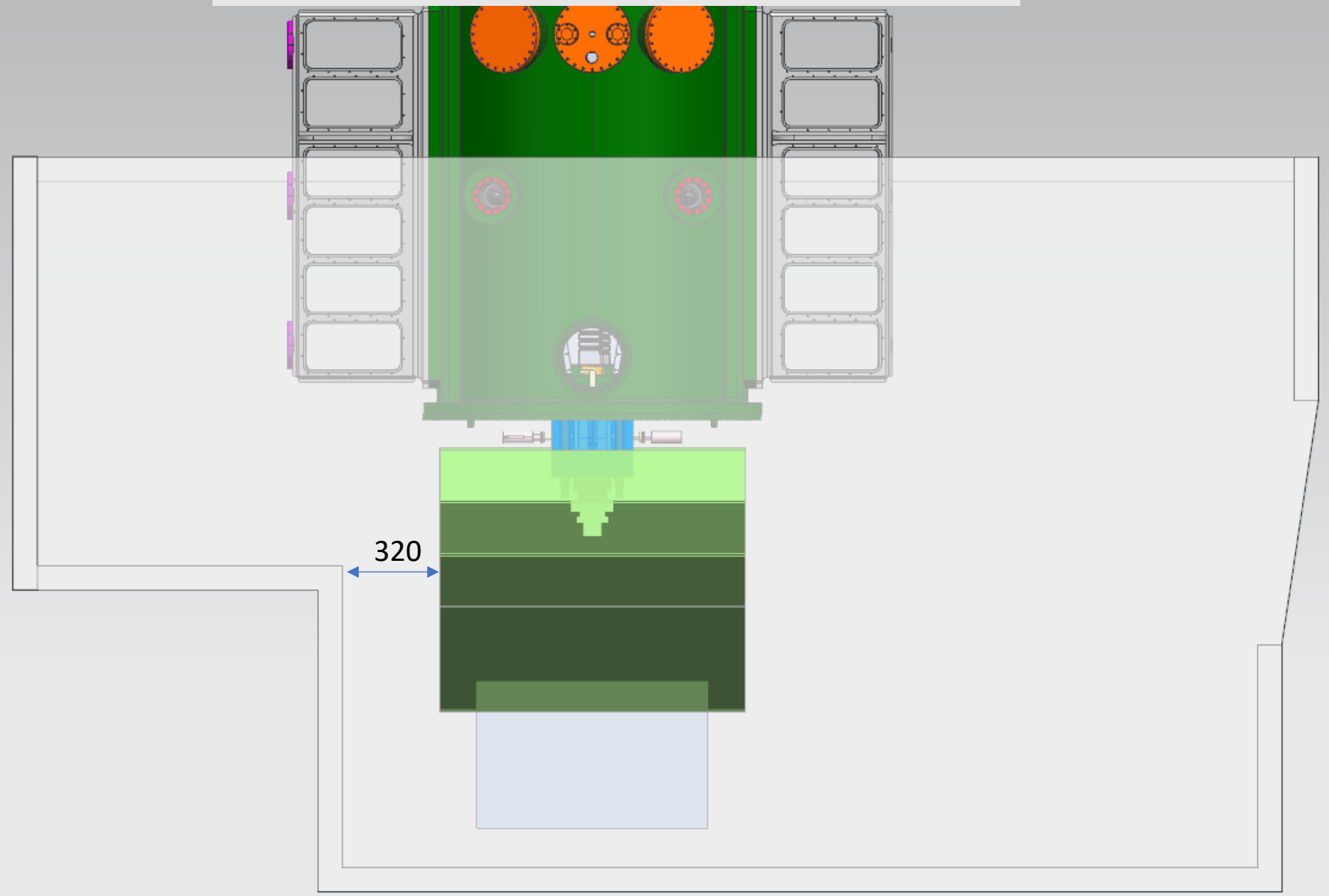
ABS & BRP IN VERTICAL LAYOUT – TOP VIEW