# Powering the opto-electrical conversion system for the data transmission of the ATLAS Inner Tracker detector at the HL-LHC

Jan Kunzmann
jan.kunzmann@students.unibe.ch

September 2021

University of Bern
Laboratory for High Energy Physics

# LHC – Large Hadron Collider

https://home.cern/news/news/cern/25-years-large-hadron-collider-experimental-programme

# ATLAS - **A** **T**oroidal **L**HC **A**pparatu**S**

- Detector at the LHC (Large Hadron Collider)
- Update High-Luminosity: Increase to 200 collisions per interaction
- Inner detector will be replaced by Inner Tracker

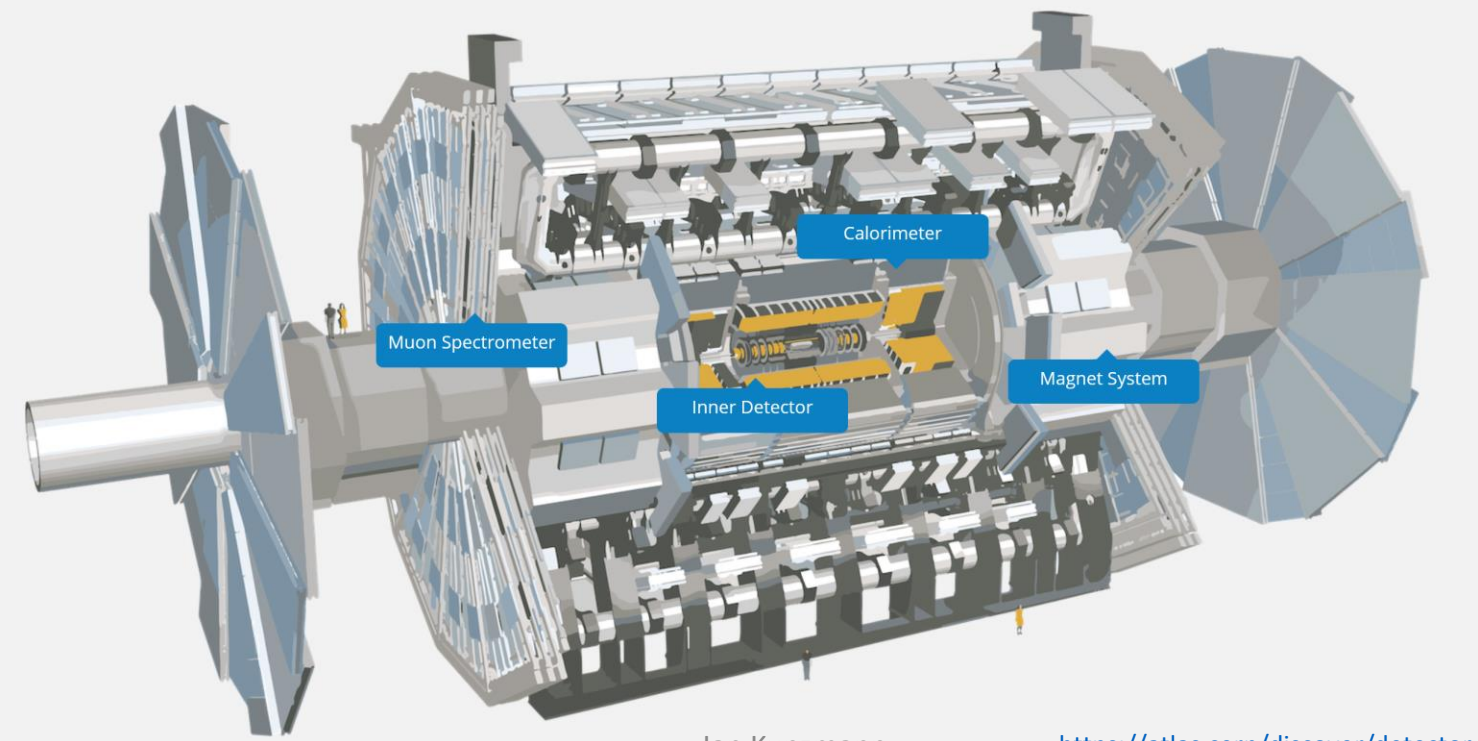


https://atlas.cern/discover/detector

# Optosystem

- Electrical signal would get disturbed over the long cable

→ Optosystem

- Electrical signal to optical and the inverse
- Total: 1572 Optoboards
- Data transfer of 50 Tbps

Schematics of the Optosystem:

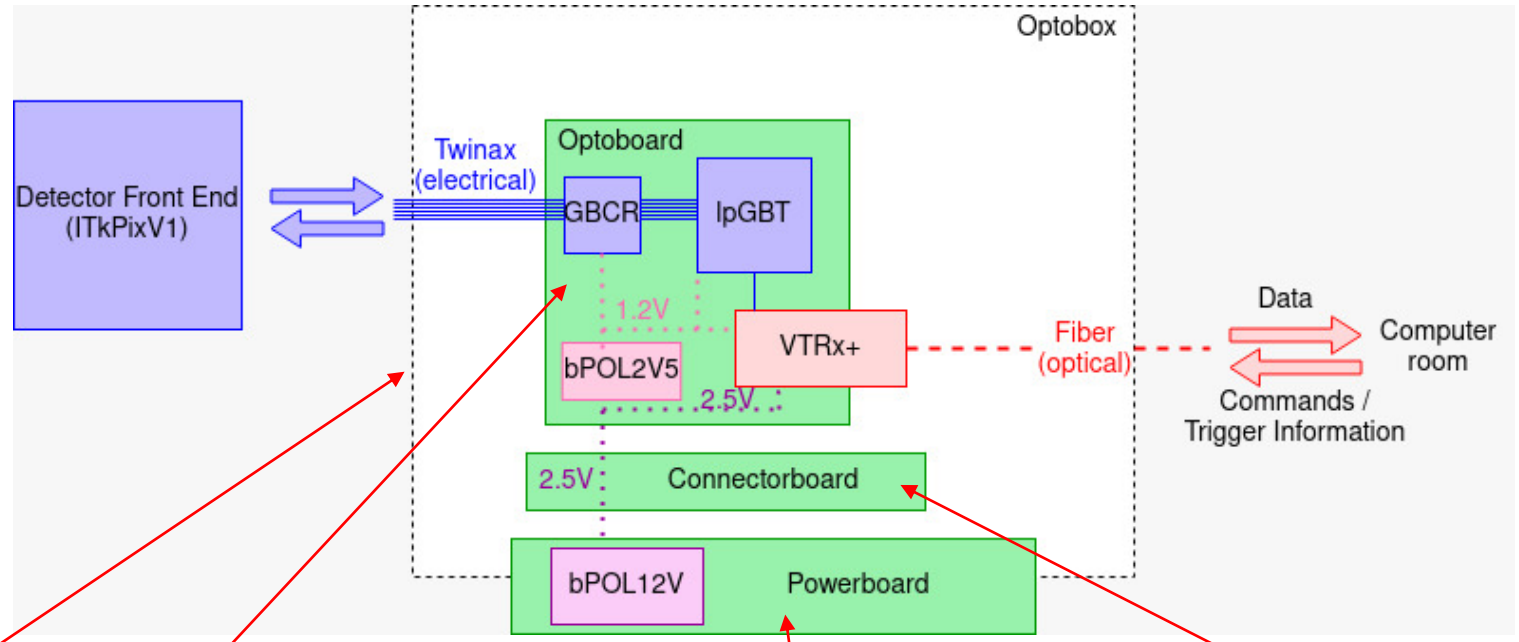


Optobox:

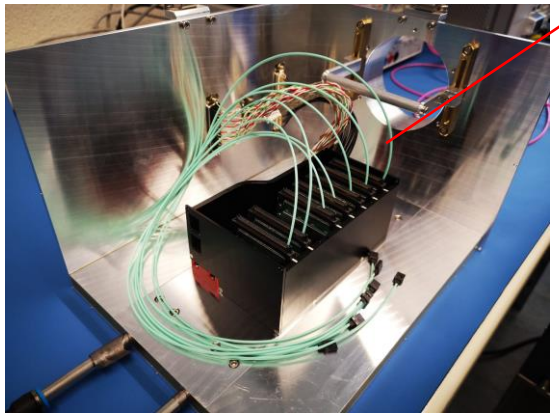

Optoboard:

Connectorboard:

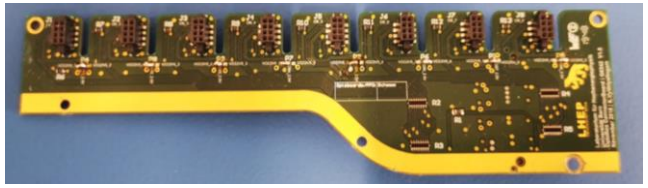

Powerboard:

# Powering of the Optosystem

- 2 stage powering
- bPOL12V and bPOL1V2 are direct current to direct current converters (DCDC converter)
- Input voltage 9 V

  → 2.5 V by bPOL12V

  → 1.2 V by bPOL1V2

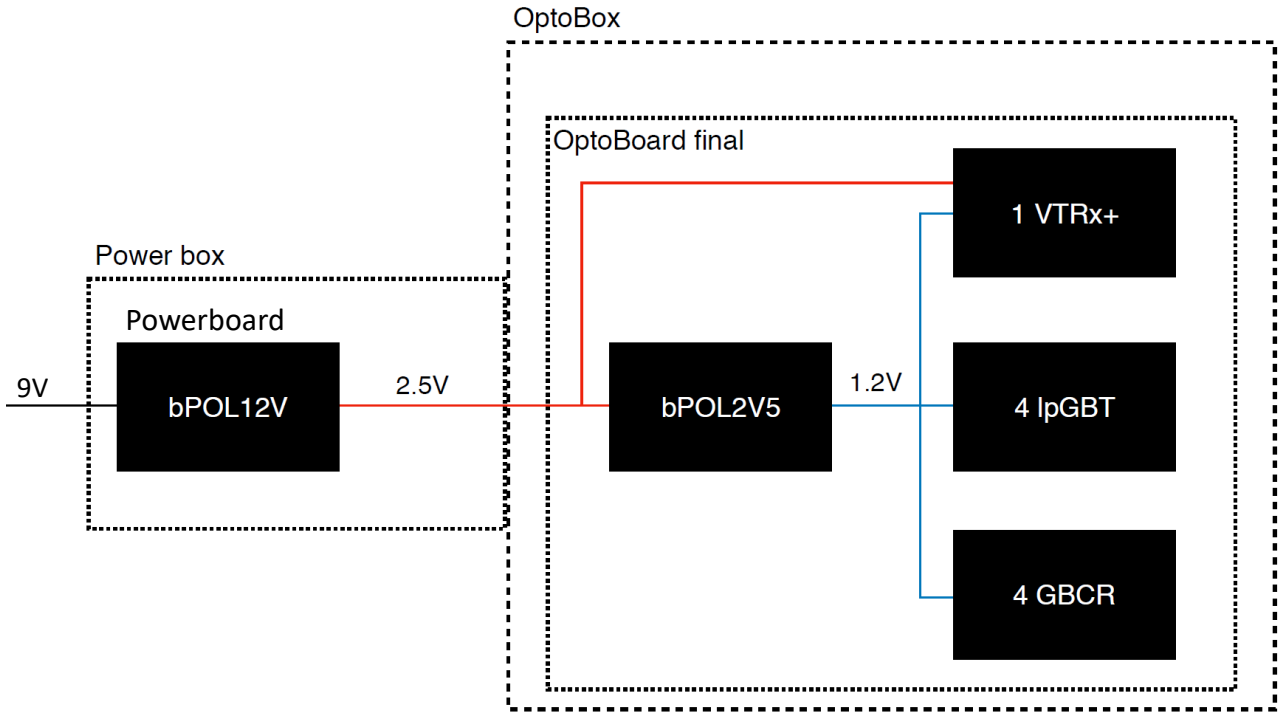


Powerboard:

Optoboard:

# Load-Line-Test

- 226 Powerboards → 5 bPOLs on one Powerboard → test each bPOL
- Output signal of the Powerboard for different input voltages and loads
- Load pulls current corresponding to 1 Optoboard (1.5 A) or 2 Optoboards (3 A)
- Each bPOL is measured as channel from A to E

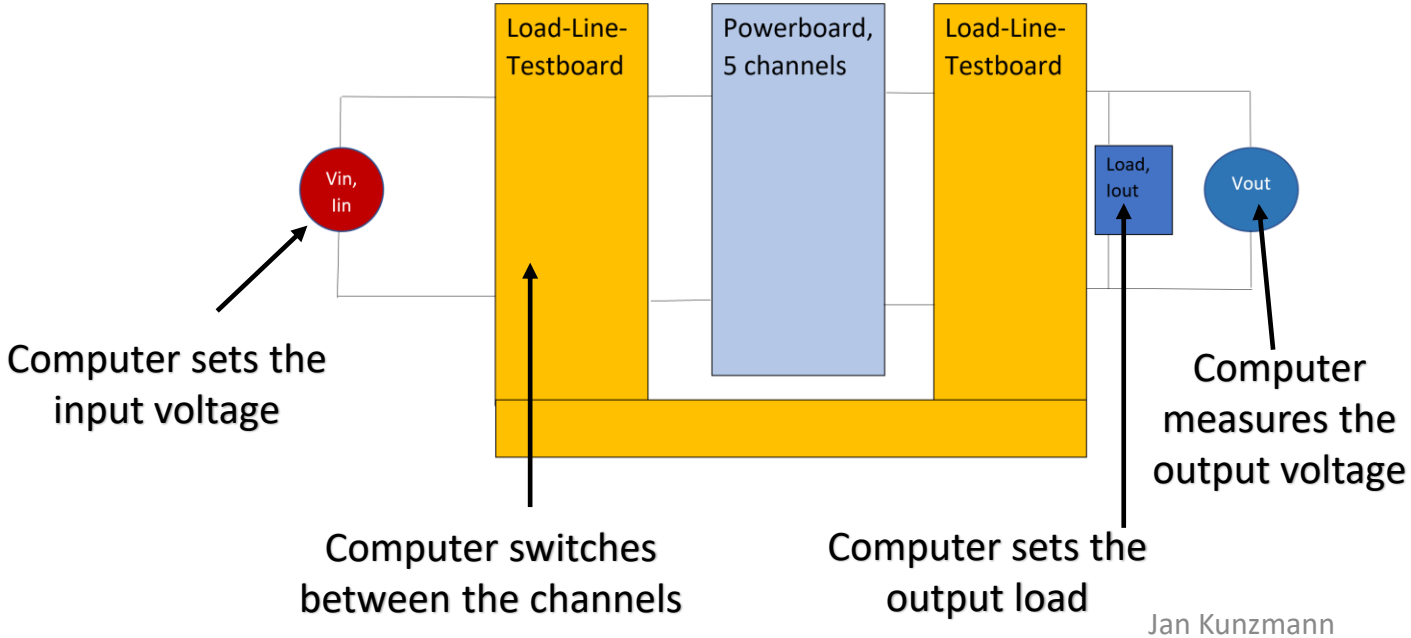


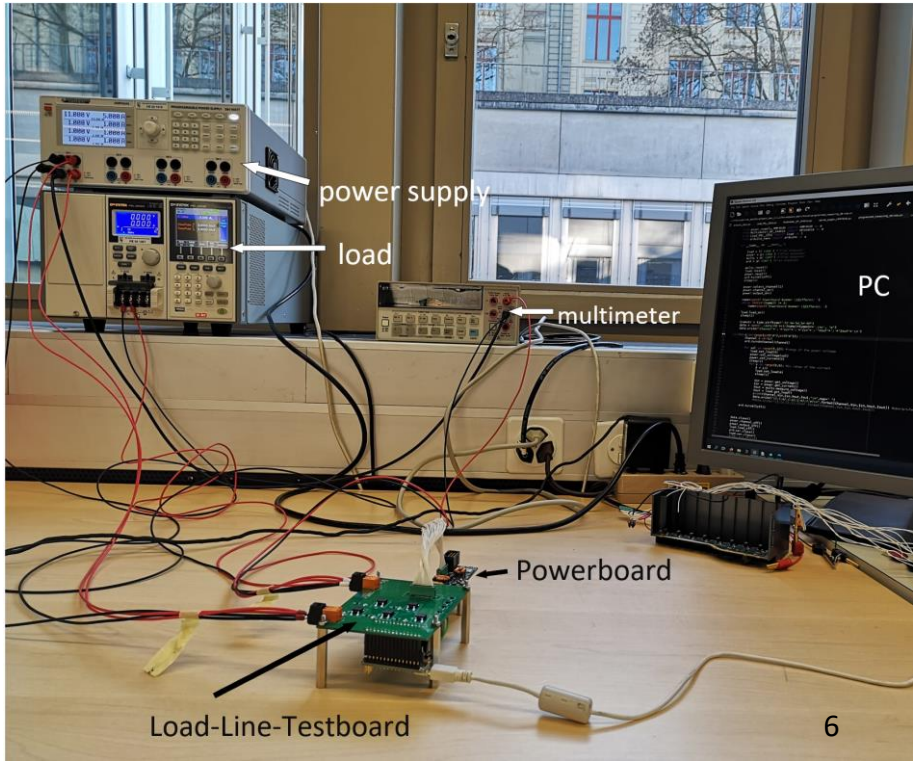

# Load-Line-Test

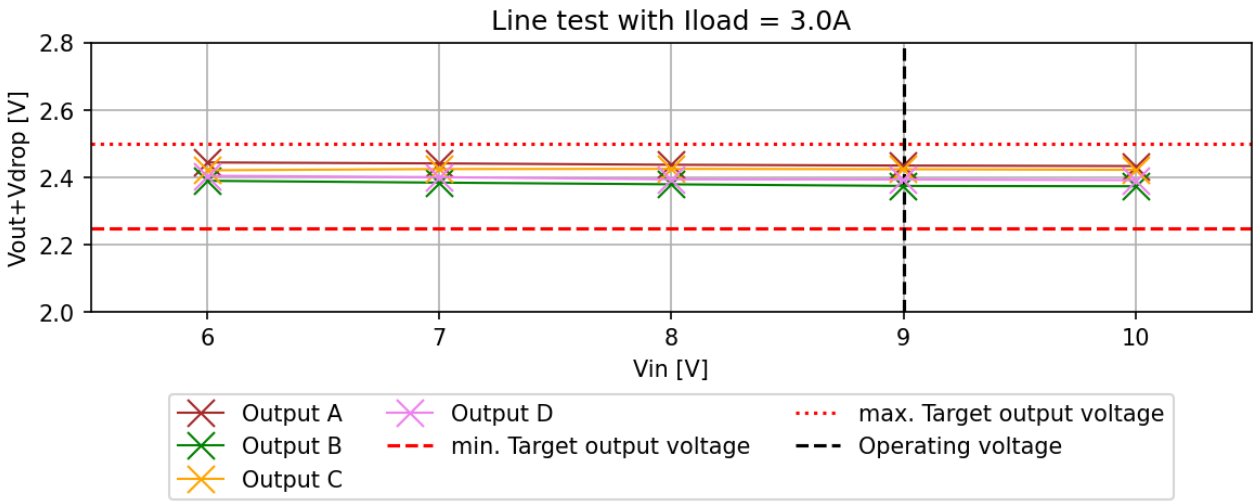


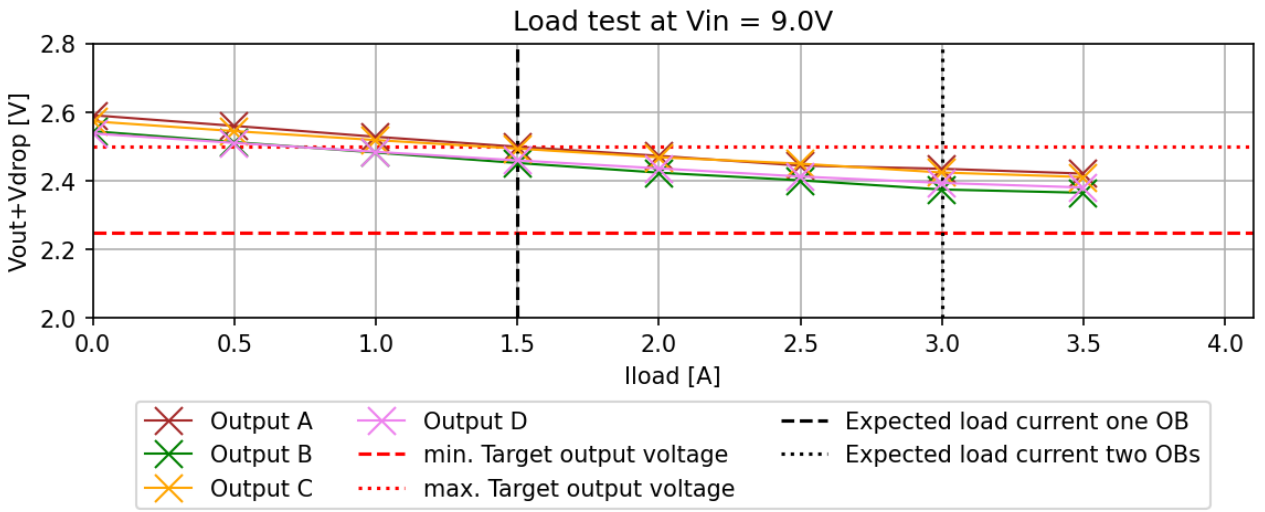


- $V_{drop}$ is the voltage drop over the Load-Line-Testboard
- Higher load causes a lower output voltage
- Output voltage is between the limit of 2.25 V and 2.5 V

# Power on test

- Measure the output of the Powerboard for different ramp-up speeds of the power supply
- Load of 3 A (= 2 Optoboards) chosen
- Delay the turn on of the bPOL12V by adding a capacity to the enable pin of the bPOL

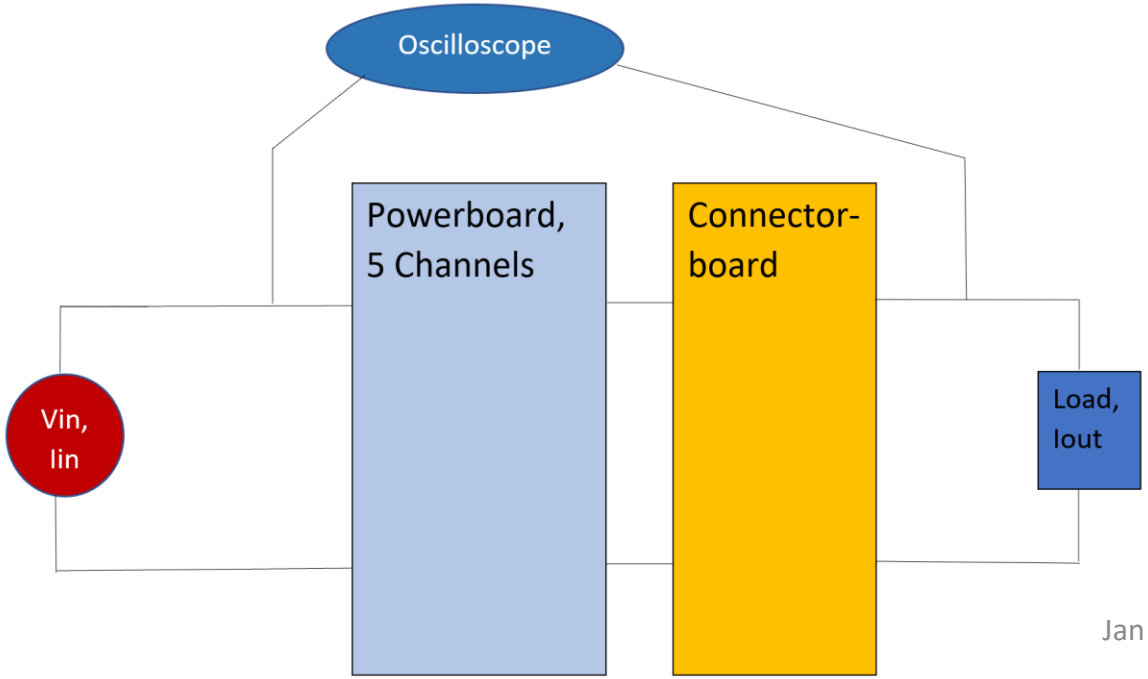


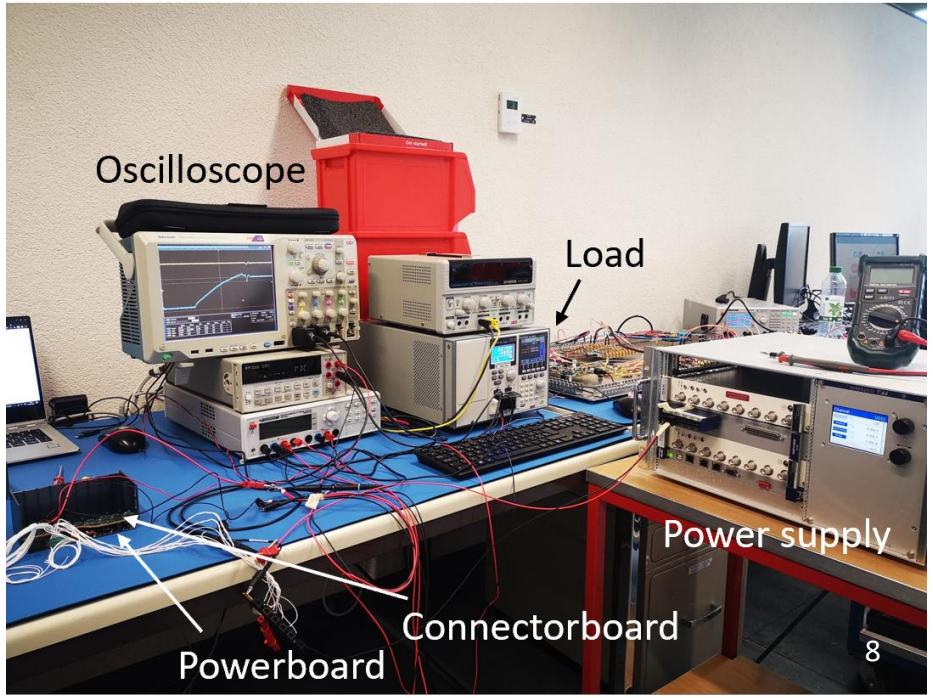

# Power on test

- 10 V/s with 3 A load

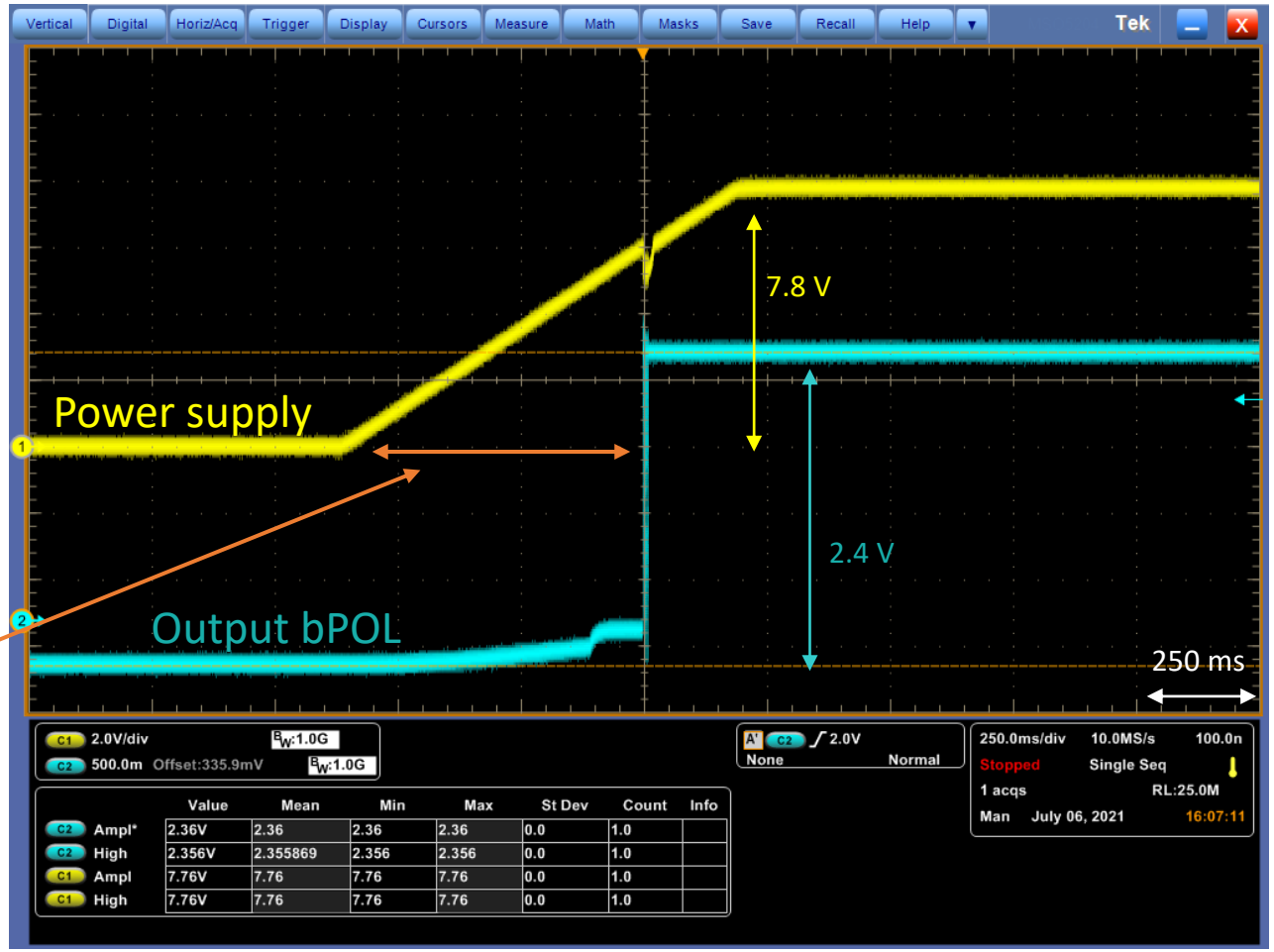


Turn on of the bPOL is delayed by adding capacity to the enable pin

Yellow: Power supply

Blue: bPOL

# Power on test

- 10 V/s with 3 A load

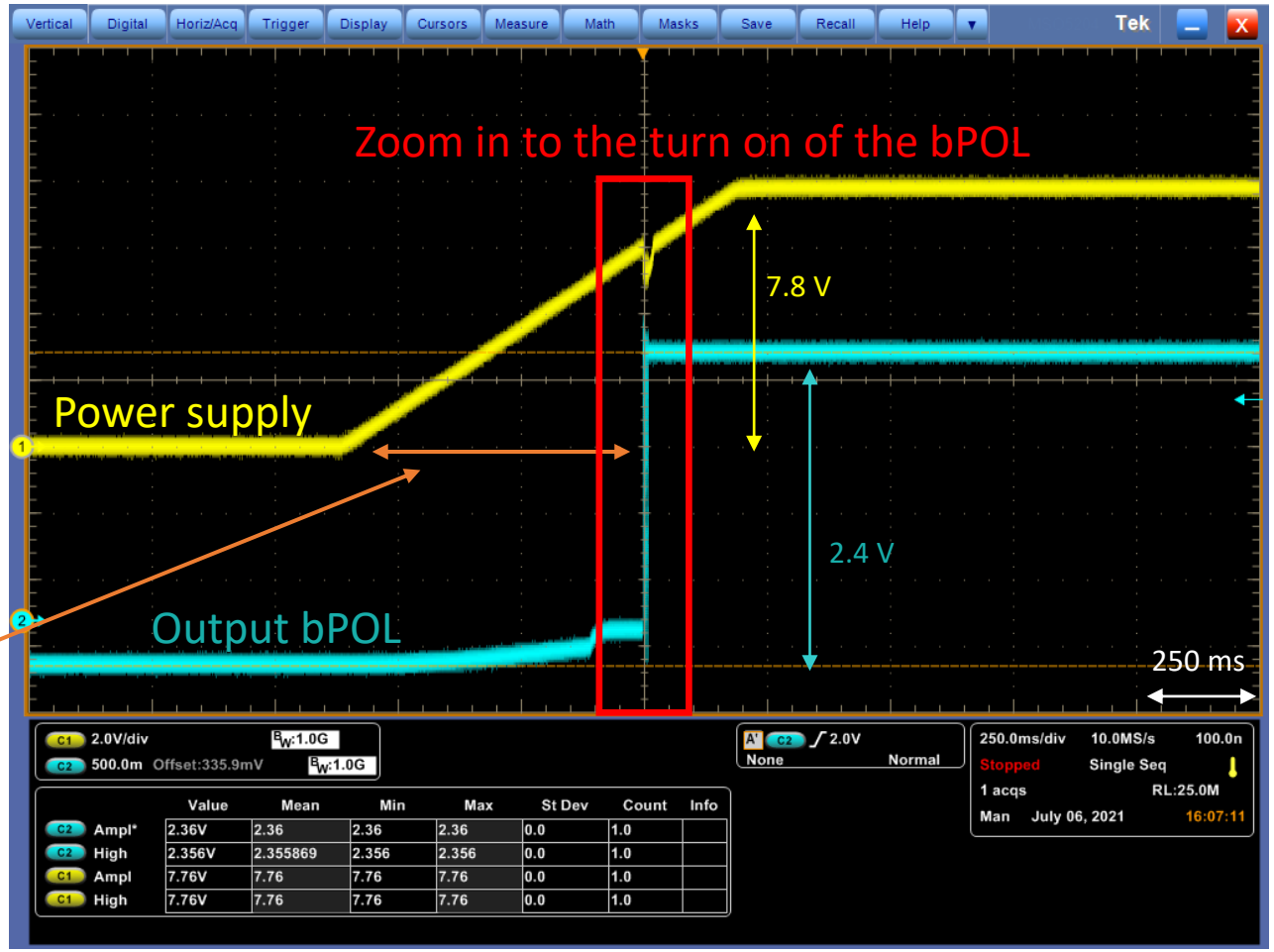


Turn on of the bPOL is delayed by adding capacity to the enable pin

Yellow: Power supply

Blue: bPOL

# Power on test

- 10 V/s with 3 A load
- A lot of fluctuations in the output

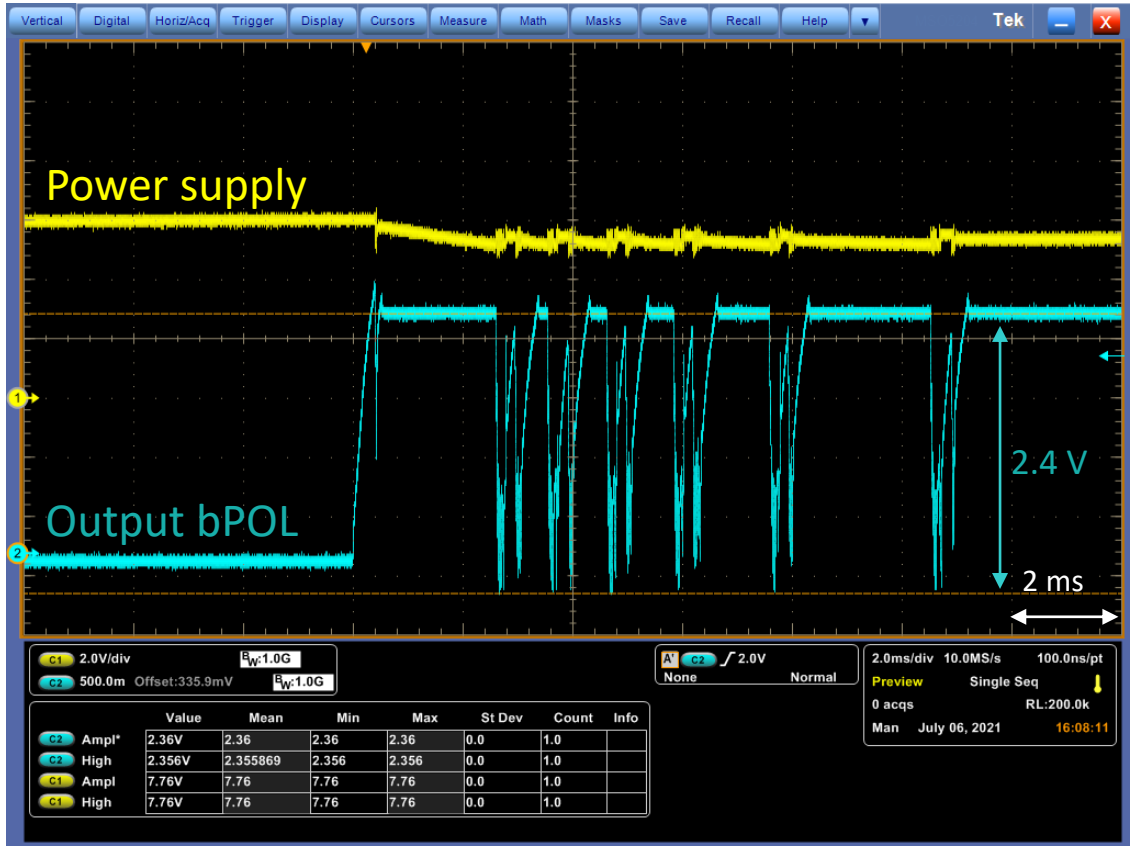


Yellow: Power supply

Blue: bPOL

# Power on test

- 20 V/s with 3 A load

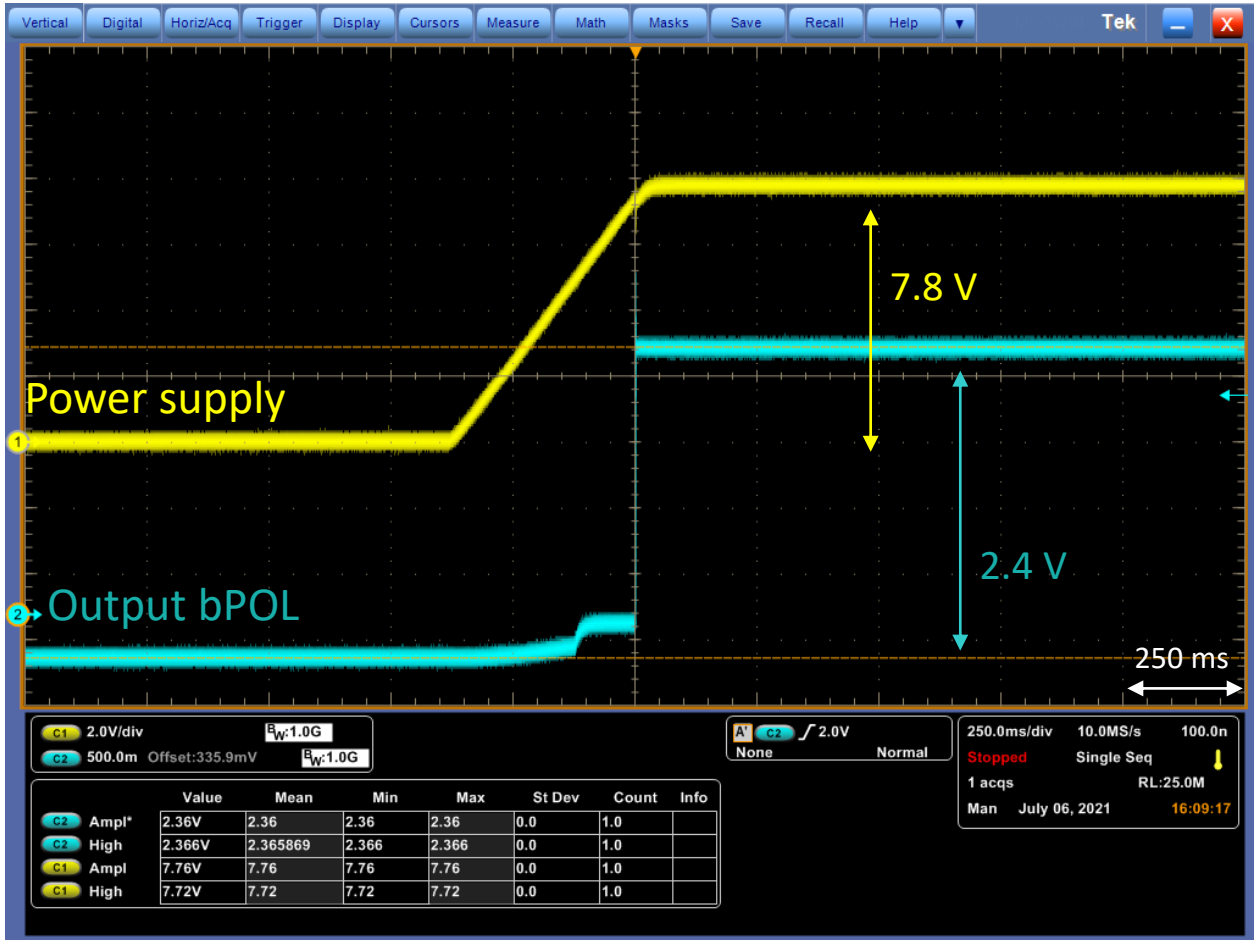


Yellow: Power supply

Blue: bPOL

# Power on test

- 20 V/s with 3 A load

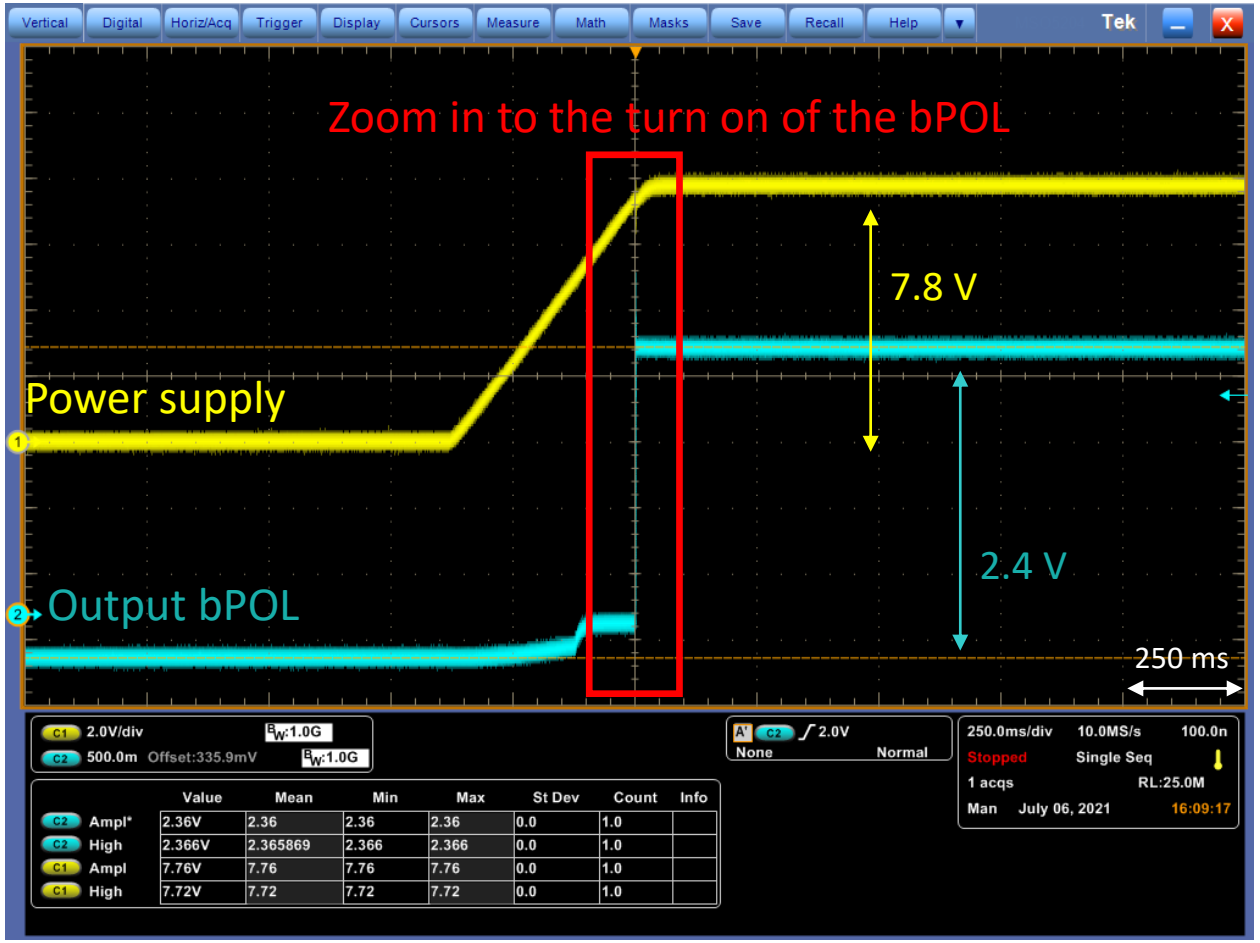


Yellow: Power supply

Blue: bPOL

# Power on test

- 20 V/s with 3 A load
- Only small fluctuations in the output

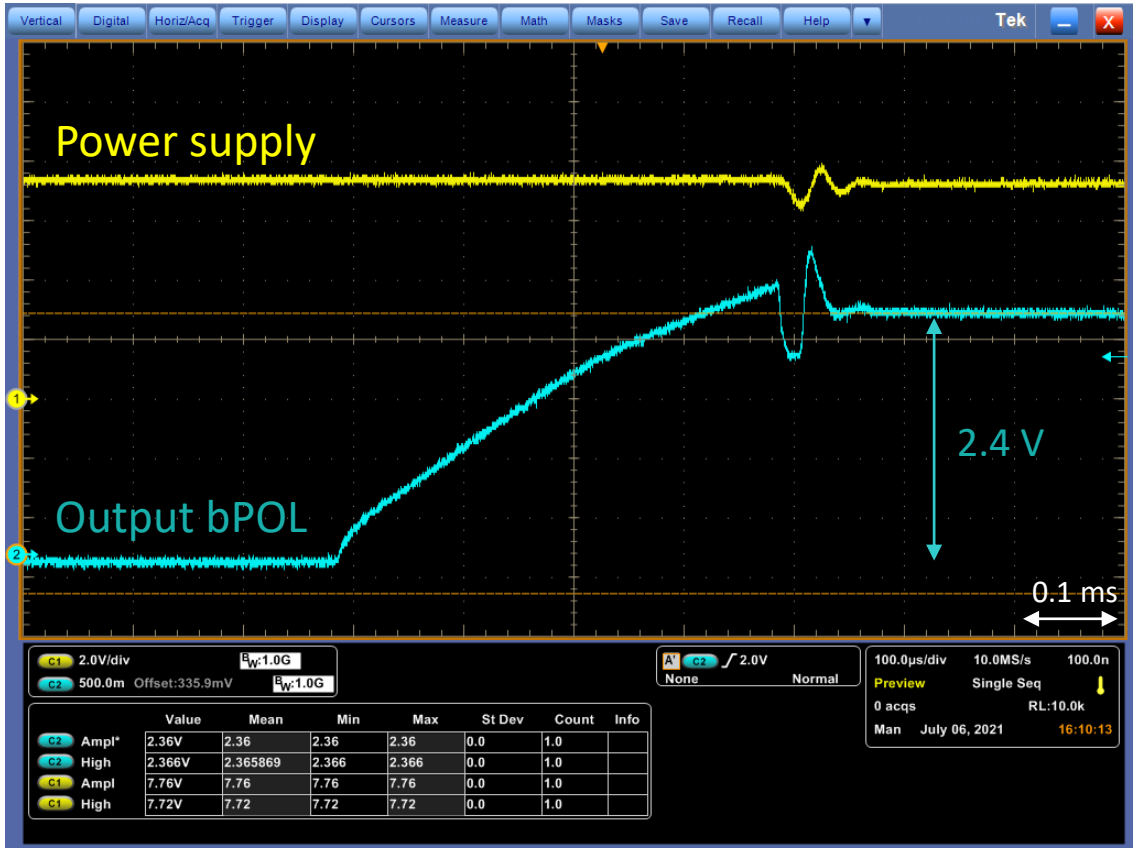


Yellow: Power supply

Blue: bPOL

# Conclusion

- Required output voltage of the Powerboard is provided
- With a minimal ramp-up of 20 V/s of the power supply one gets a smooth ramp-up of the Powerboard

Next step:

- Check all the new Powerboards to ensure that they work properly
- Do the power on test with the full-length cables

# Back up

# ITk Pixel Detector

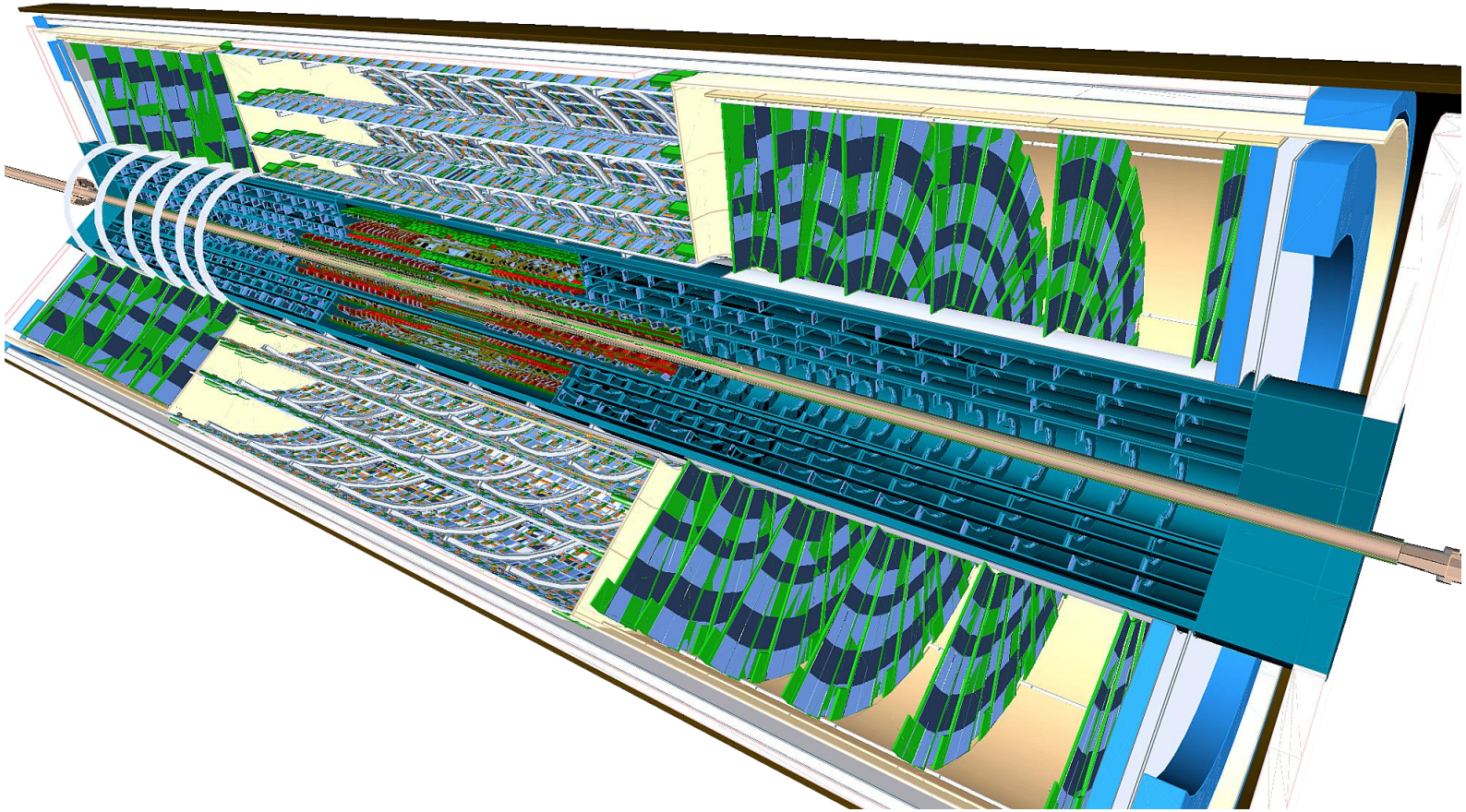

https://cds.cern.ch/record/2302625/files/ATL-ITK-SLIDE-2018-073.pdf

# Optosystem

- Electrical signal to optical and the inverse
- Data transfer of:
  - 8 Optopannels in the ATLAS detector
  - 28 Optoboxes per Optopannel
  - Max. 8 Optoboards per Optobox
  - Up to 24 uplinks per Optoboard
  - 1.28 Gbps per uplink
  - 8 downlinks per Optoboard
  - 160 Mbps per downlink

- Total: 1572 Optoboards
- Data transfer of 50 Tbps

Schematics of the Optosystem:

Uplink: Data transfer

Downlink: Command to ITk Pixel modules

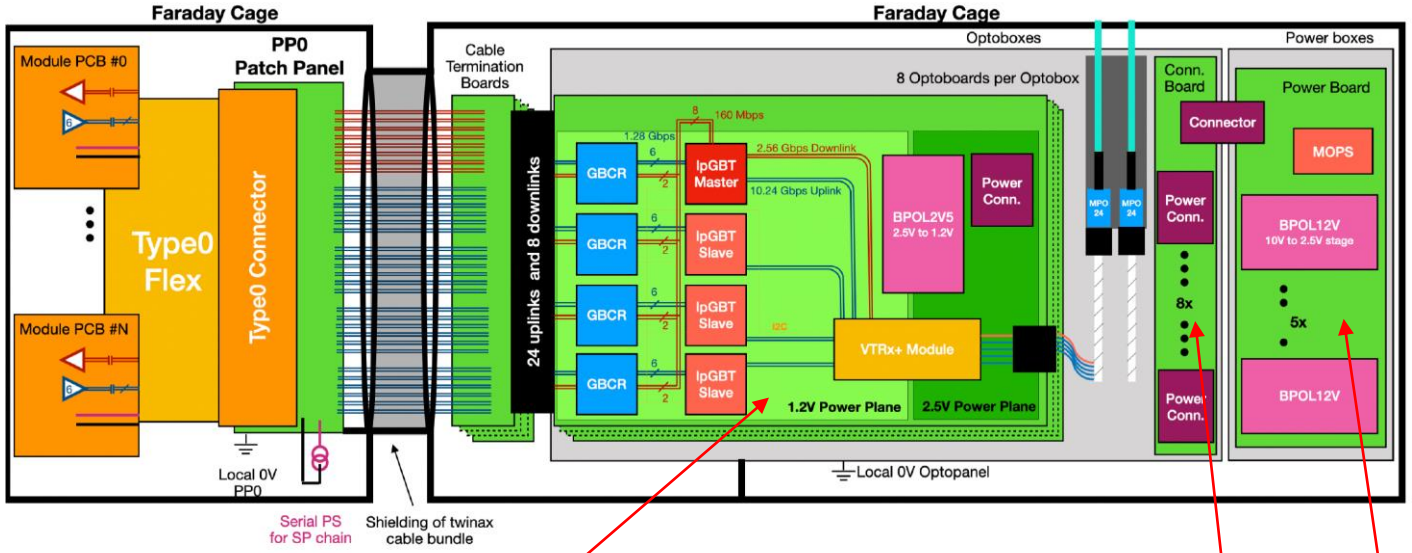


Optoboard:

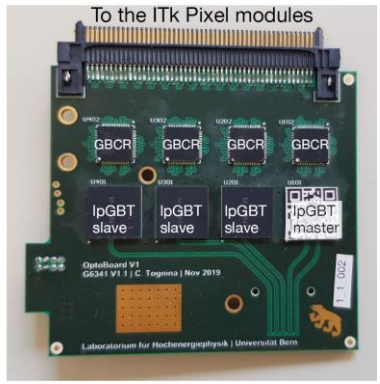


Connectorboard:

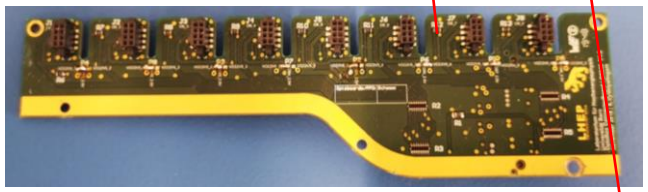

Powerboard:

# bPOL

- DCDC converter (step-down converter):
- Converts 9 V into 2.5 V
- Converts 2.5 V into 1.2 V

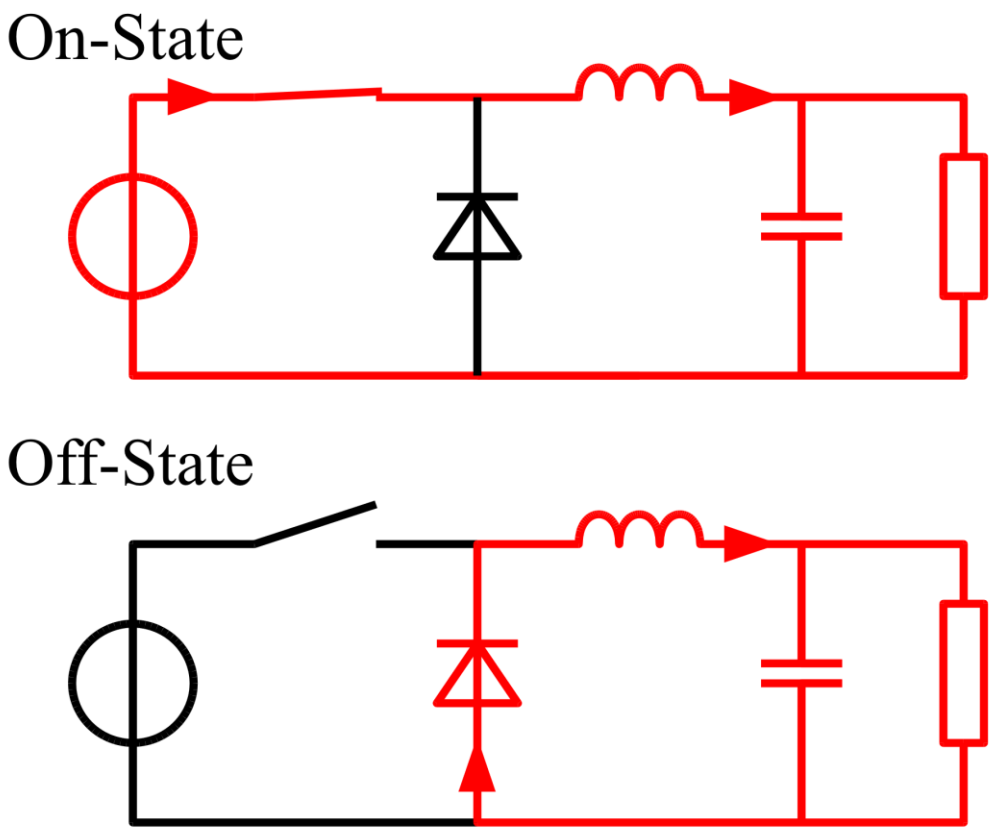


https://en.wikipedia.org/wiki/Buck_converter

# MOPS - Monitoring of Pixel Detector

- Monitors the temperature
- Monitors the output voltage of the DCDC converters

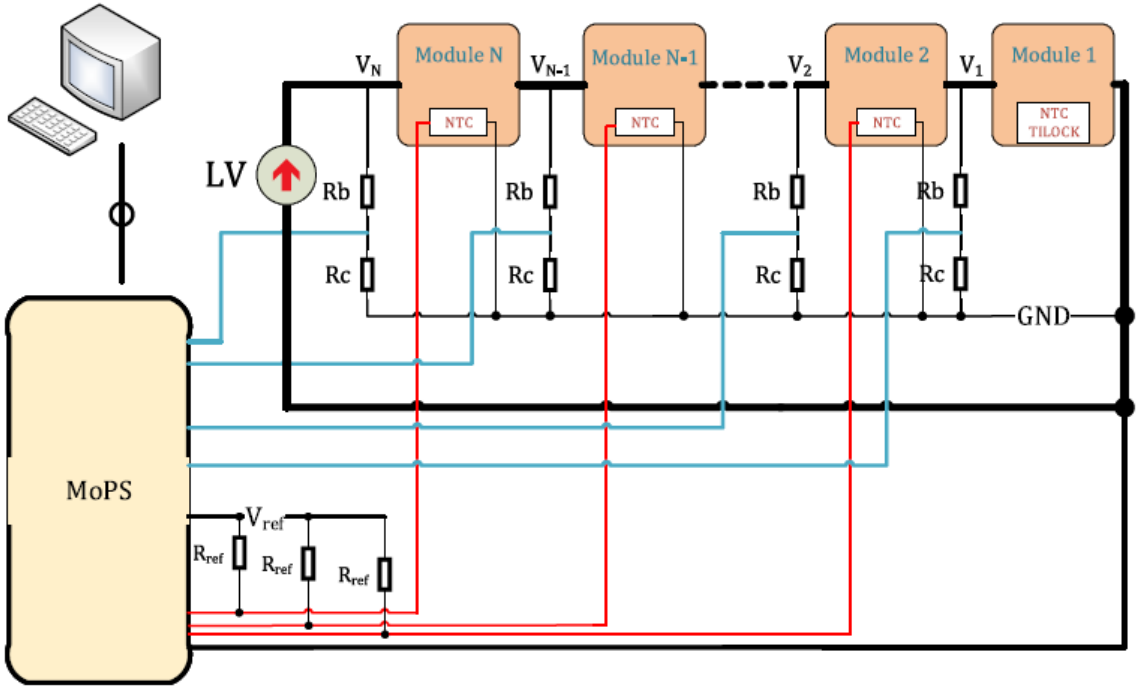


Figure 1: Detector control system control path



https://indico.cern.ch/event/981823/contributions/4295569/attachments/2250197/3817018/poster_558.pdf