Relative Formation Probabilities for Fluoride and Oxyfluoride Anions of U, Np, Pu and Am in Accelerator Mass Spectrometry Measurements at VERA

Andreas Wiederin[1]

R. Golser[1], M. Kern[1], K. Hain[1], M. Martschini[1], A. Sakaguchi[2], P. Steier[1], A. Yokoyama[3]

[1]University of Vienna, Austria [2]University of Tsukuba, Japan [3]Kanazawa University, Japan

Joint Annual Meeting of ÖPG and SPS 2021

Presenting author email: andreas.wiederin@univie.ac.at

Why is this interesting?
^{237}Np spike project

- **Second most abundant anthropogenic actinide in the environment?**
- **Released by nuclear weapons tests and industry**
- **Potential environmental tracer**
  - **Long lived and highly mobile in water**

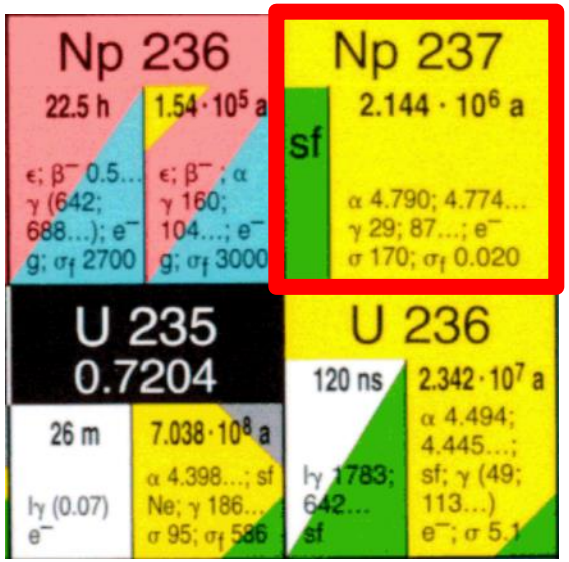

Magill et al., Nucleonica GmbH, 2006

Why is this interesting? ^{237}Np spike project

- **Second most abundant anthropogenic actinide in the environment?**
- **Released by nuclear weapons tests and industry**
- **Potential environmental tracer**
  - **Long lived and highly mobile in water**

- **Challenging to measure in general environment:**
  - **Decay counting: very large samples ($T_{1/2}$!)**
  - **MS: background from ^{238}U, $^{235}UH_2$**
  - **AMS: Lack of isotopic spike hinders quantification**

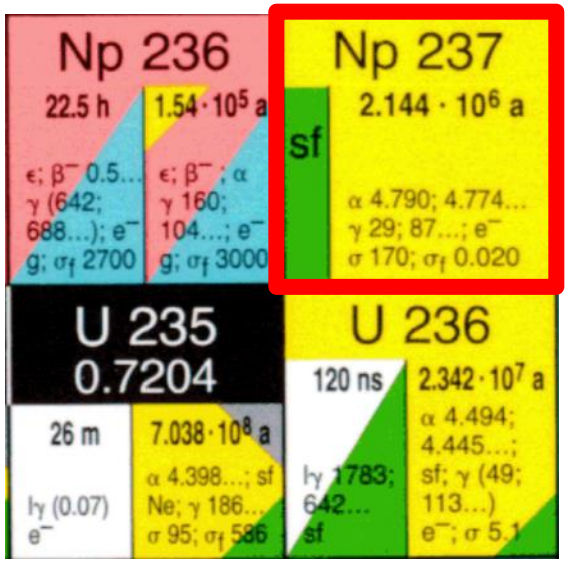

Magill et al., Nucleonica GmbH, 2006

Why is this interesting? ^{237}Np spike project

- Second most abundant anthropogenic actinide in the environment?
- Released by nuclear weapons tests and industry
- Potential environmental tracer
  - Long lived and highly mobile in water

- Challenging to measure in general environment:
  - Decay counting: very large samples ($T_{1/2}$!)
  - MS: background from ^{238}U, $^{235}UH_2$
  - AMS: Lack of isotopic spike hinders quantification
    - Different isotope of Np to add to sample for relative measurements

- Severely understudied!

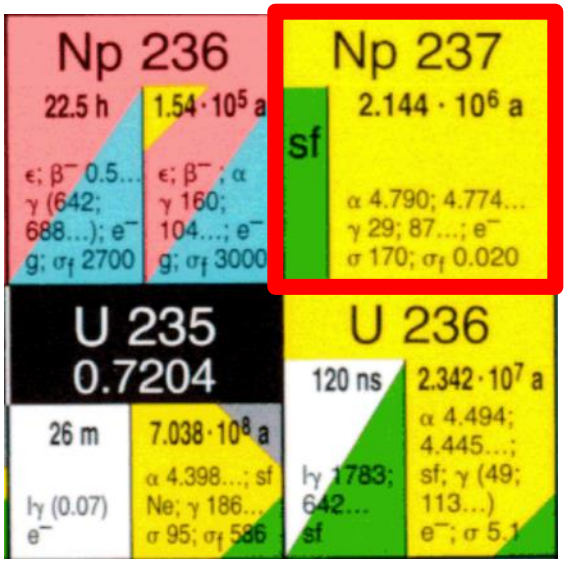

Magill et al., Nucleonica GmbH, 2006

Why is this interesting? ^{237}Np spike project

- Plan: Develop isotopic spike for ^{237}Np
  - Joint Project: Universities of Vienna, Tsukuba and Kanazawa
  - Current focus: ^{232}Th(^{7}Li,3n)^{236}Np reaction

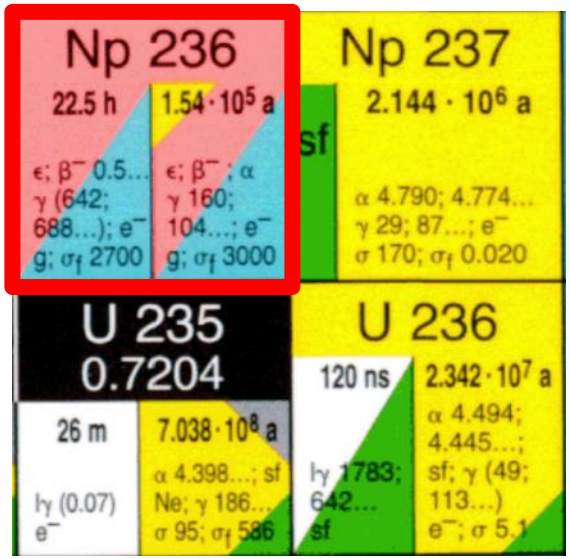

Magill et al., Nucleonica GmbH, 2006

Why is this interesting?
^{237}Np spike project

- Plan: Develop isotopic spike for ^{237}Np
  - Joint Project: Universities of Vienna, Tsukuba and Kanazawa
  - Current focus: ^{232}Th(^{7}Li,3n)^{236}Np reaction

- Problem: Isobaric interference from ^{236}U
  - Co-production in irradiation for spike production?
    - Need a method to distinguish ^{236}U and ^{236}Np!
  - ^{236}U in environmental samples
    - U – Np Isobar separation necessary for ^{236}Np spike
      - ILIAMS?

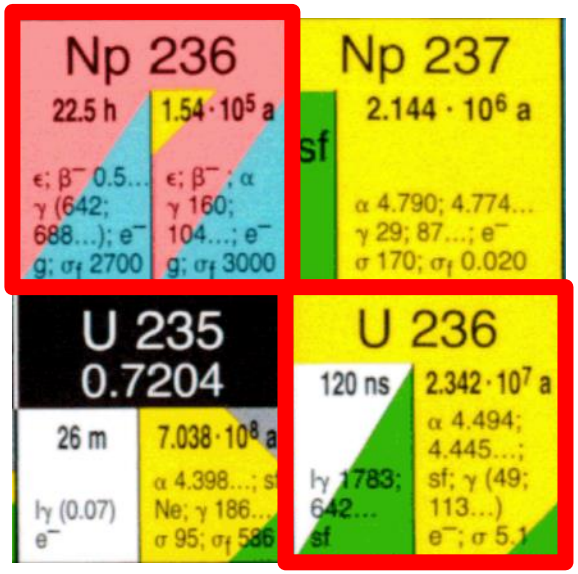

Magill et al., Nucleonica GmbH, 2006

Fluoride molecular anions of actinides

- AMS: negative ions
  - Actinides do not form sufficient atomic anions
    → Molecular anions

Fluoride molecular anions of actinides

- AMS: negative ions
  - Actinides do not form sufficient atomic anions

  ⟶ Molecular anions

- Fluoride molecular anions for actinides?

[X.-L. Zhao et al., Nucl Instrum Methods Phys Res B 294 (2013), 356-360]

[R.J. Cornett et al., Nucl Instrum Methods Phys Res B 361 (2015), 317-321]

Fluoride molecular anions of actinides

- AMS: negative ions
  - Actinides do not form sufficient atomic anions
    → Molecular anions

- Fluoride molecular anions for actinides?

[X.-L. Zhao et al., Nucl Instrum Methods Phys Res B 294 (2013), 356-360]

[R.J. Cornett et al., Nucl Instrum Methods Phys Res B 361 (2015), 317-321]

  - Research at VERA is focused on mixing oxide materials in Fe_2O_3 with PbF_2
    → In situ fluoridization inside the Cs-sputter ion source

[M. Kern, this meeting]

Fluoride molecular anions of actinides

- **The relative formation probabilities for a range of (oxy-)fluoride molecular anions of U, Np, Pu and Am have been systematically investigated**

AnF_5^-	AnF_4O^-	$AnF_3O_2^-$
AnF_3O^-	$AnF_2O_2^-$	AnF_4^-

An stands for U, Np, Pu or Am

Fluoride molecular anions of actinides

- The relative formation probabilities for a range of (oxy-)fluoride molecular anions of U, Np, Pu and Am have been systematically investigated

AnF_5^-	AnF_4O^-	$AnF_3O_2^-$
AnF_3O^-	$AnF_2O_2^-$	AnF_4^-

An stands for U, Np, Pu or Am

- Isobaric contaminations can be monitored with this data
  - First application: ^{236}U in prospective ^{236}Np spike material

- UF_4^-, NpF_4^- candidates for U – Np separation with ILIAMS

universität wien

Materials and Methods

Sample preparation

- Reference material
  - ^{236}U, ^{237}Np, ^{242}Pu, ^{243}Am ($3x10^8$ at) in nitric sol.
  - Dried with 300µg Fe
  - Ignition (800°C)
  - Mixed with PbF_2 (1:9 mass ratio)
  - Required in every beamtime

Sample preparation

- Reference material
  - ^{236}U, ^{237}Np, ^{242}Pu, ^{243}Am ($3x10^8$ at) in nitric sol.
  - Dried with 300µg Fe
  - Ignition (800°C)
  - Mixed with PbF_2 (1:9 mass ratio)
  - Required in every beamtime

- Material from $^{232}Th(^7Li,3n)^{236}Np$ irradiation
  - RIKEN Nishina Center for Accelerator Based Science
    - Chemical purification at University of Tsukuba
  - Previously measured at VERA in oxide form
    - Residue mixed with PbF_2 for isobar analysis

Measurements at VERA

- $AnF_mO_n^{1-}$ selected by low energy mass spectrometer

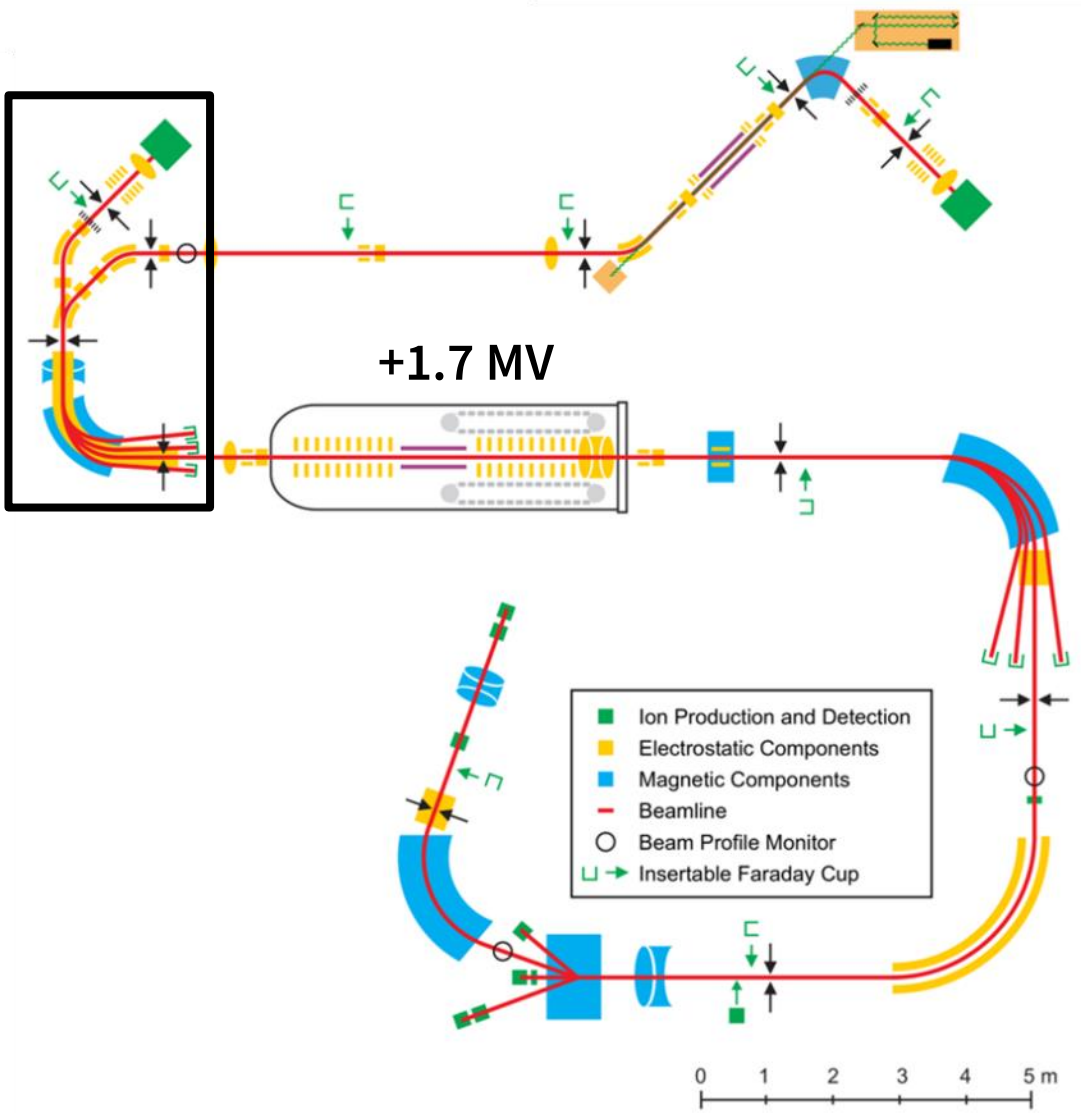

Measurements at VERA

- $AnF_mO_n^{1-}$ selected by low energy mass spectrometer
- He-stripping destroys molecules

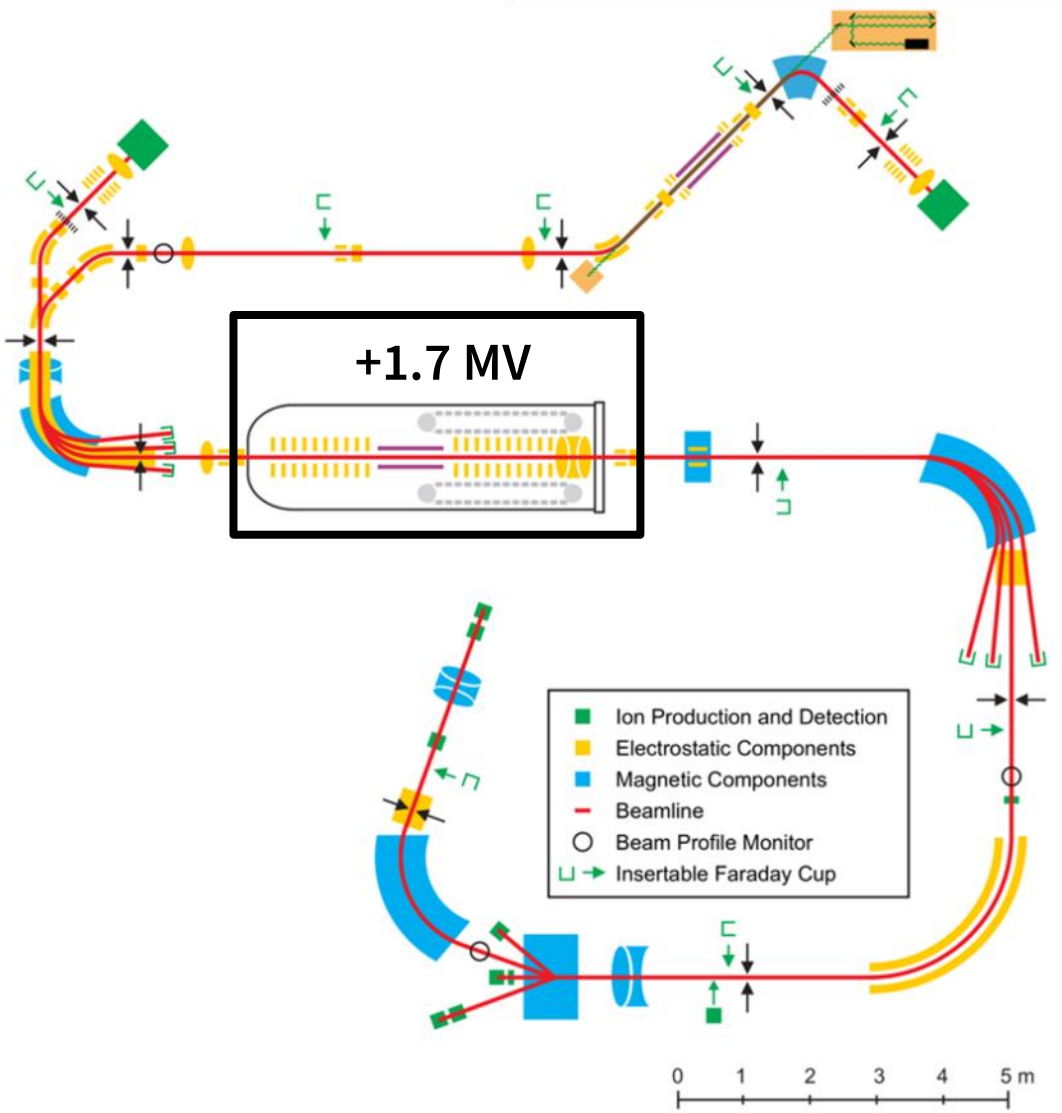

Measurements at VERA

- $AnF_mO_n^{1-}$ selected by low energy mass spectrometer
- He-stripping destroys molecules
- High energy mass spectrometer selects An^{3+}

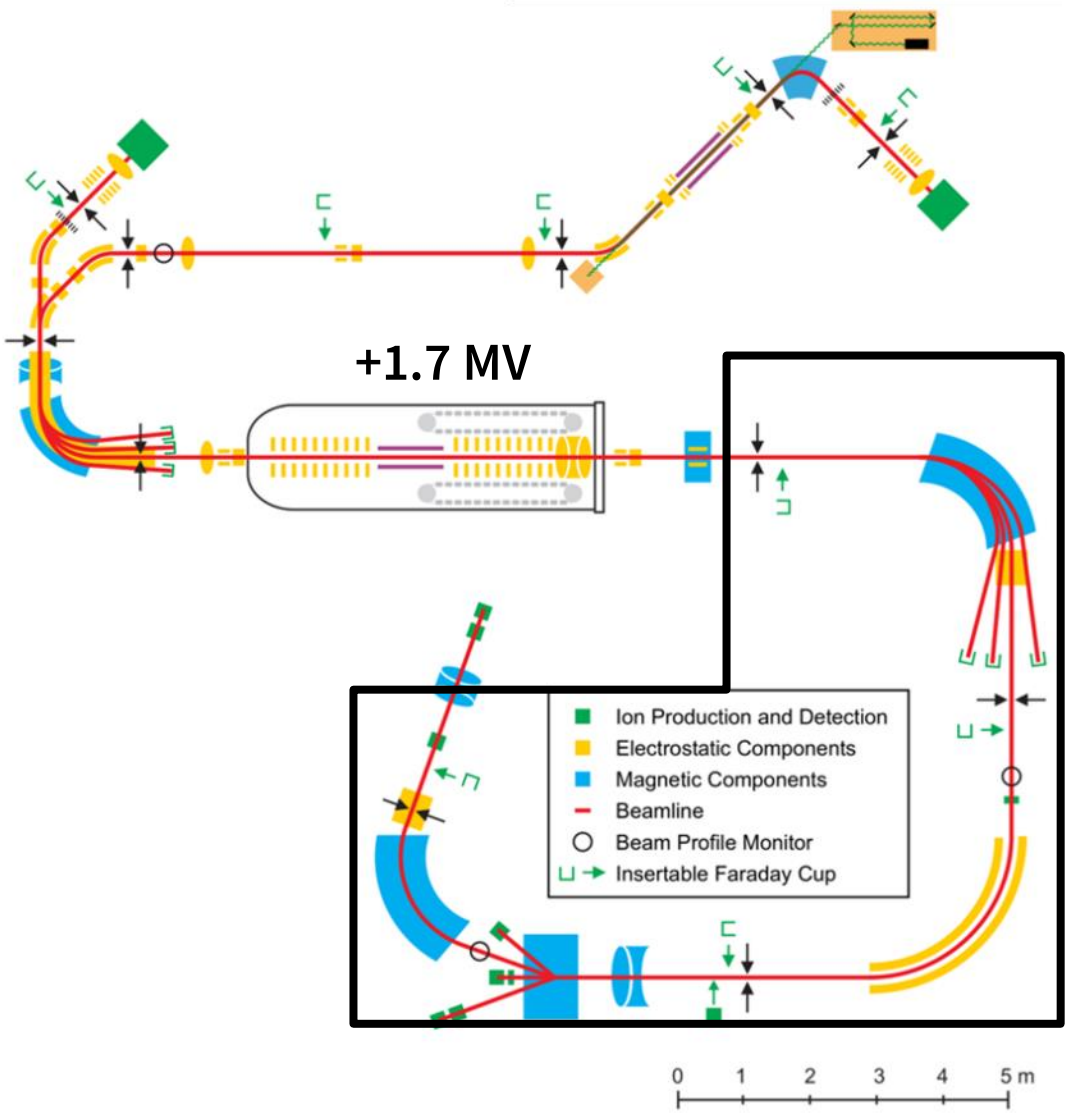

Measurements at VERA

- $AnF_mO_n^{1-}$ selected by low energy mass spectrometer
- He-stripping destroys molecules
- High energy mass spectrometer selects An^{3+}
- An^{3+} detected in Bragg type ionization chamber

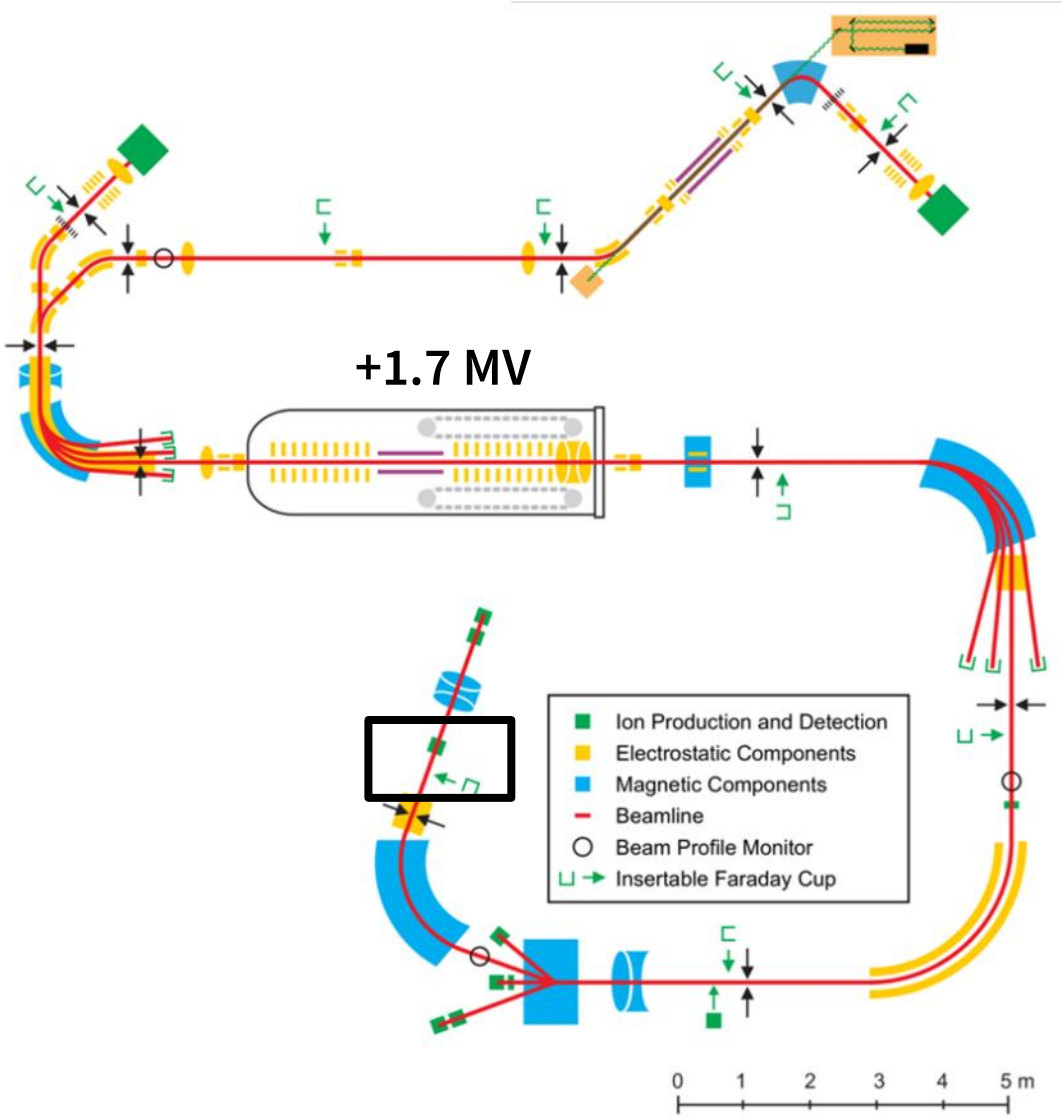

Measurements at VERA

- $AnF_mO_n^{1-}$ selected by low energy mass spectrometer
- He-stripping destroys molecules
- High energy mass spectrometer selects An^{3+}
- An^{3+} detected in Bragg type ionization chamber

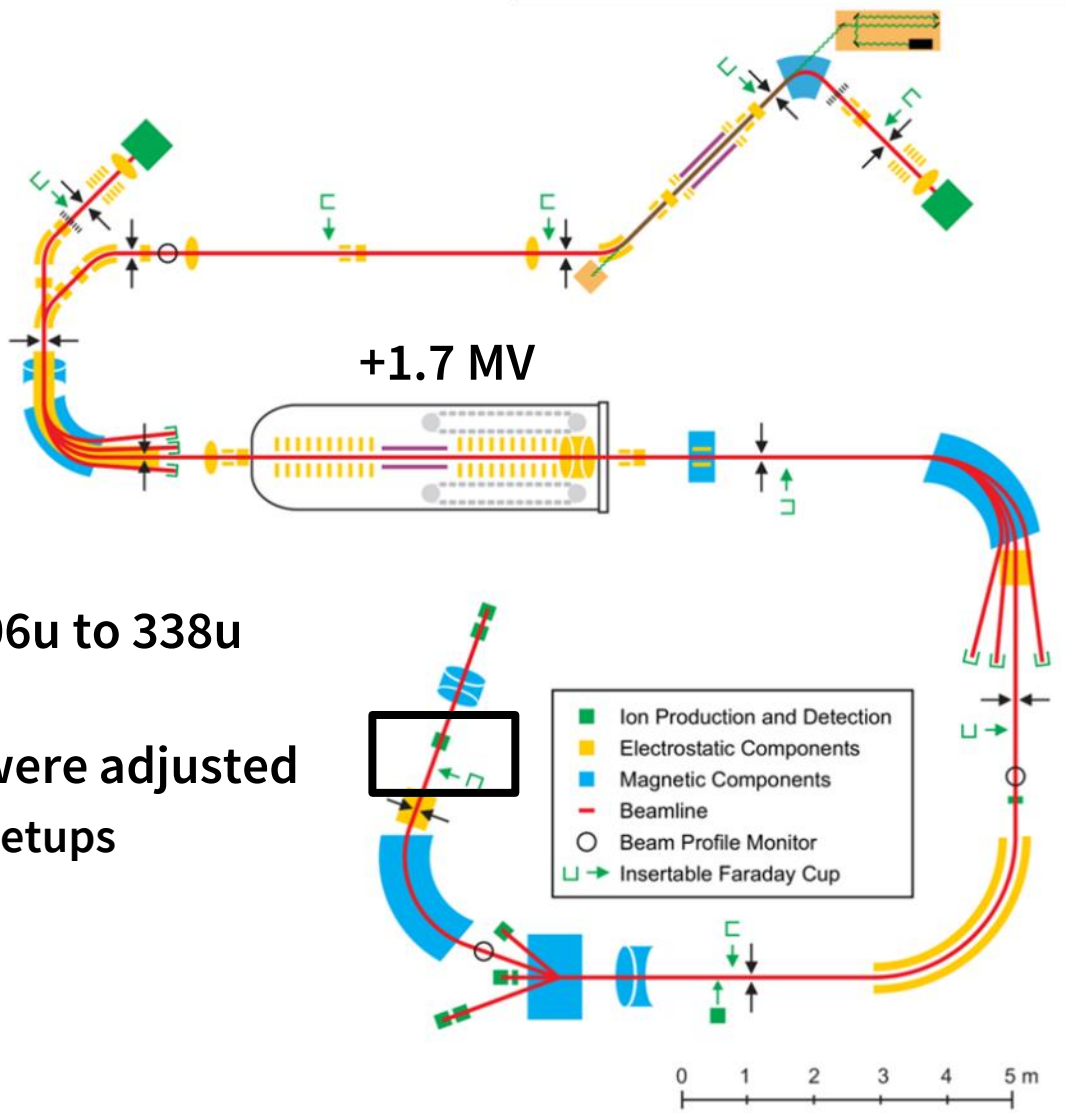

- 24 machine setups with masses 306u to 338u measured on each target
  - Only electrostatic components were adjusted
    - magnetic rigidity constant for all setups

universität wien

Results

All results are stated in the form of AnF_mO_n/AnF_5 ratios

Formation distribution: reference materials

- **Characteristic $UF_mO_n^-$ /UF_5^- ratios**

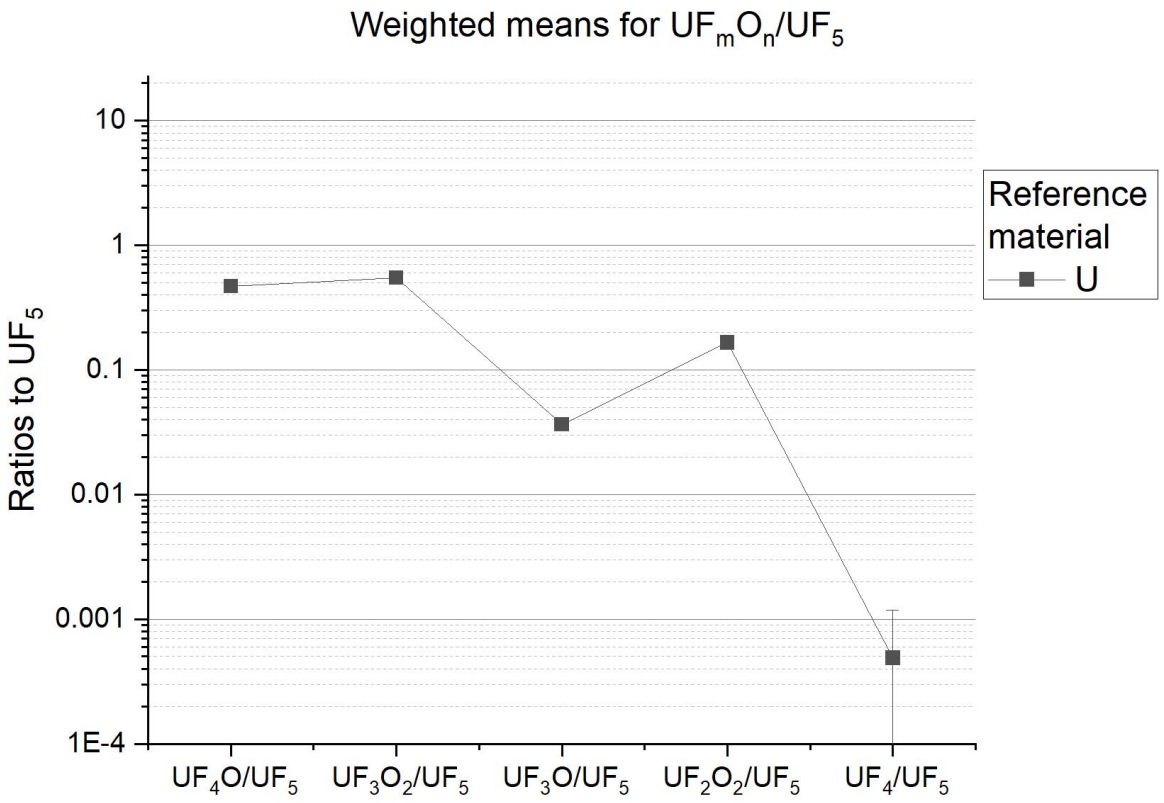

Formation distribution: reference materials

- **Characteristic $AnF_mO_n^-$ /AnF_5^- ratios for U, Np**

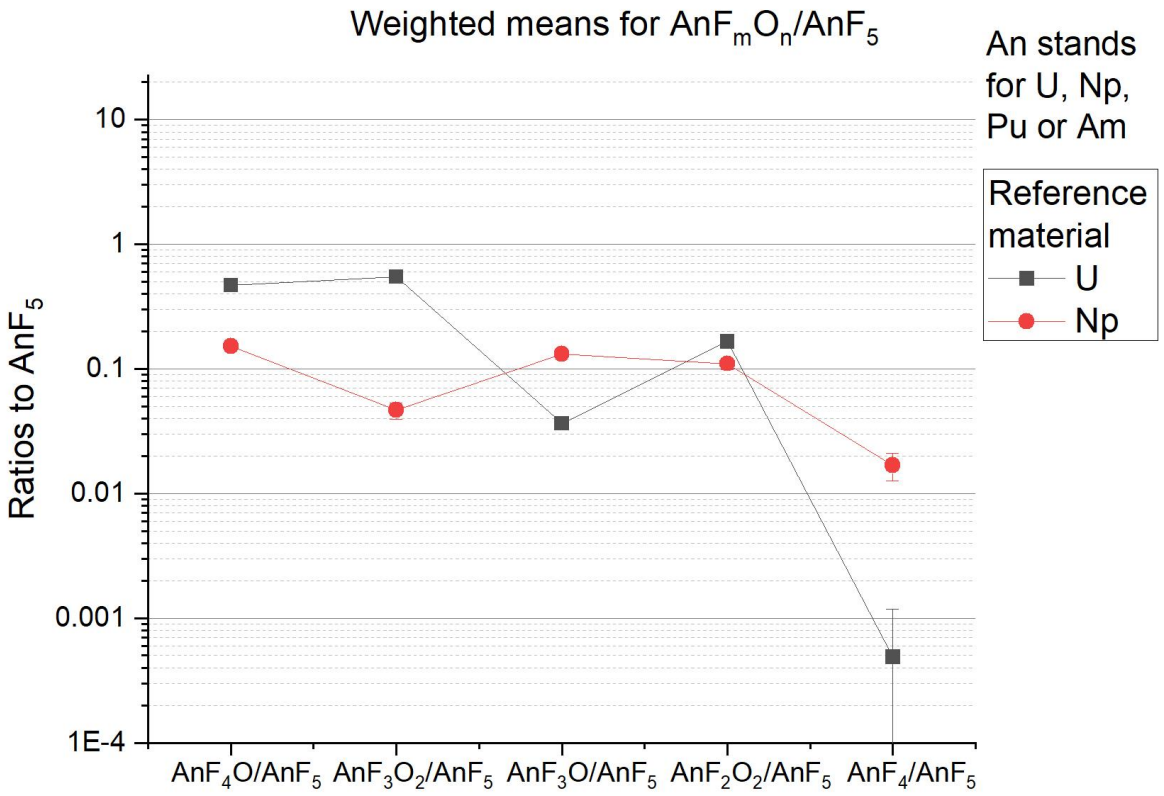

Formation distribution: reference materials

- **Characteristic $AnF_mO_n^-$ /AnF_5^- ratios for U, Np, Pu**

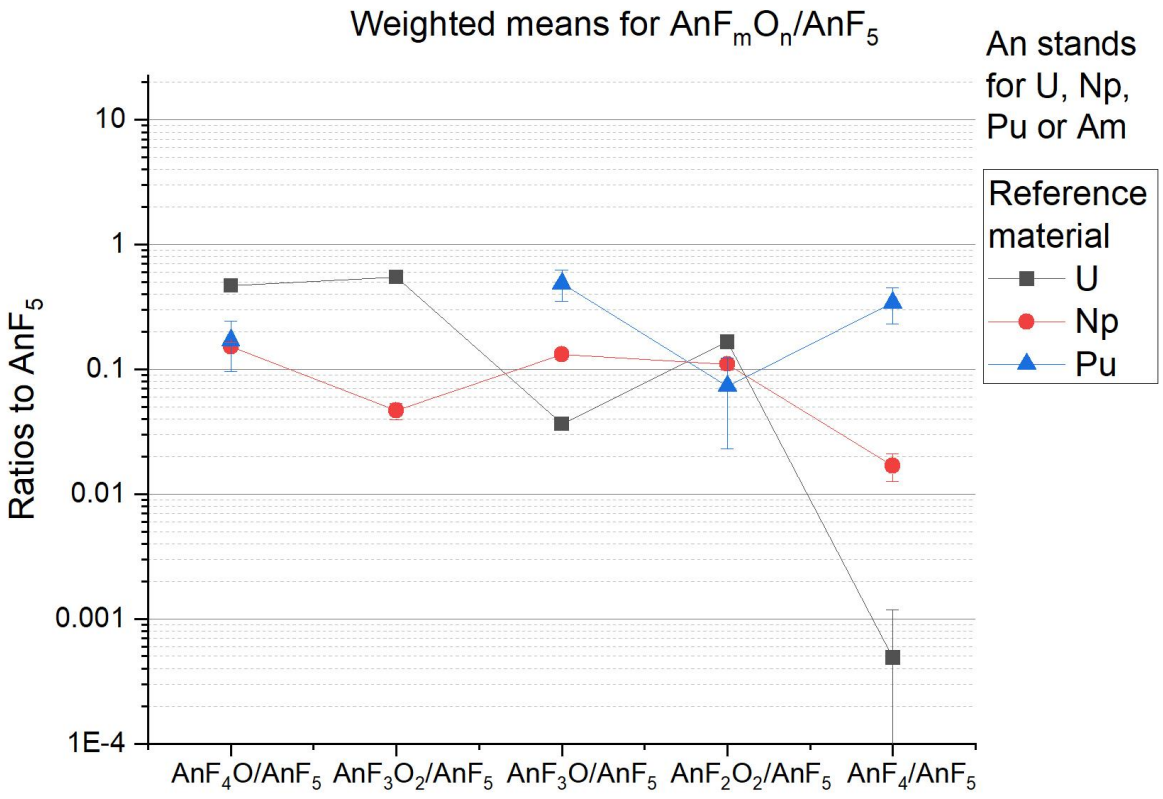

Formation distribution: reference materials

- **Characteristic $AnF_mO_n^-$ /AnF_5^- ratios for U, Np, Pu, Am**

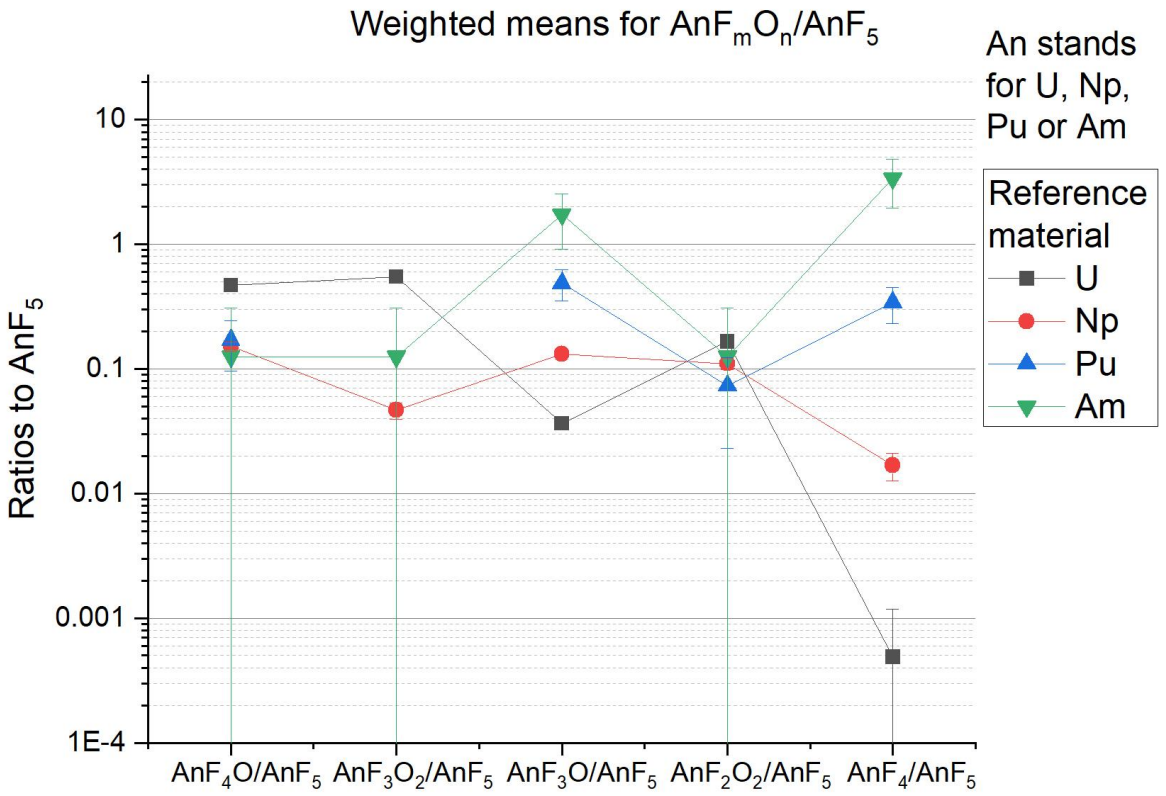

Formation distribution: reference materials

- Characteristic $AnF_mO_n^-/AnF_5^-$ ratios for U, Np, Pu, Am
  - Isobaric contaminations shift formation ratios
  - AnF_4^-/AnF_5^-!

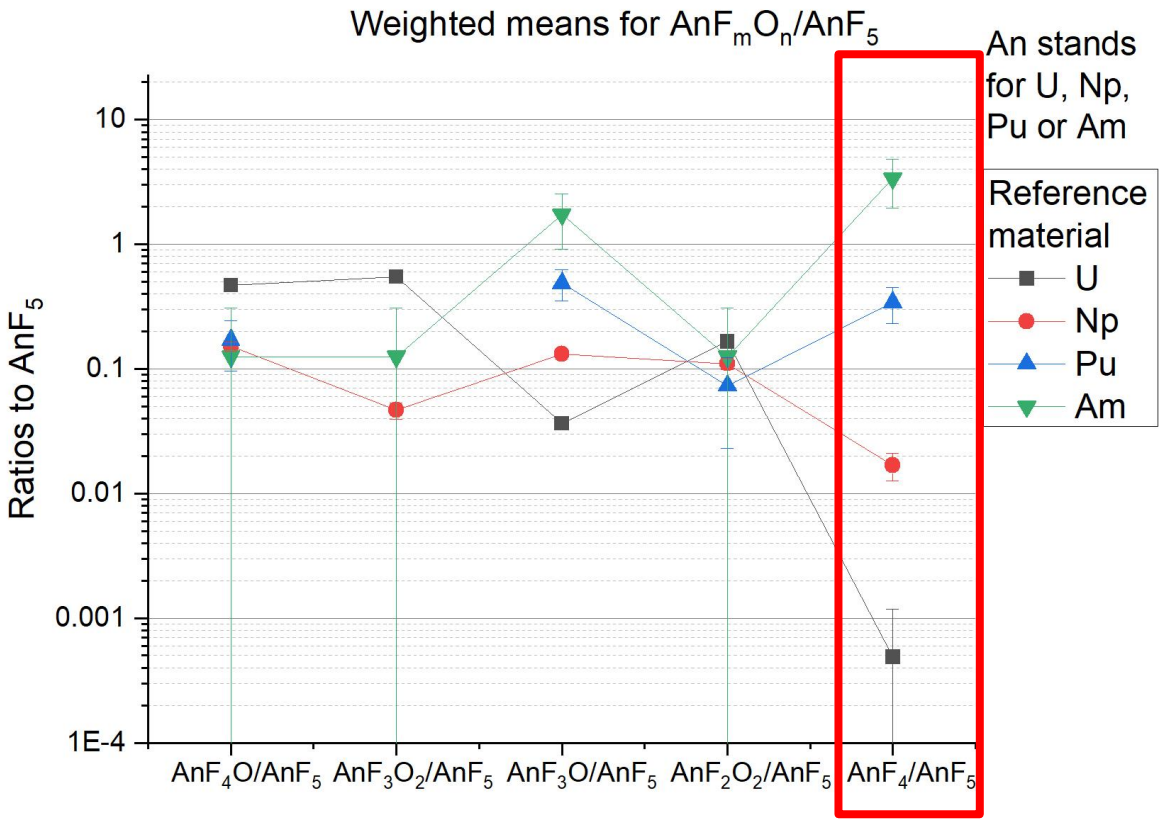

Formation distribution: reference materials

- Characteristic $AnF_mO_n^-/AnF_5^-$ ratios for U, Np, Pu, Am
  - Isobaric contaminations shift formation ratios
  - AnF_4^-/AnF_5^-!
- UF_4^-, NpF_4^- for ILIAMS?
  - Hypothesis: correlation anion formation ratio to e^- detachment energy?
  - Suppression of U vs Np by one order of magnitude in ion source

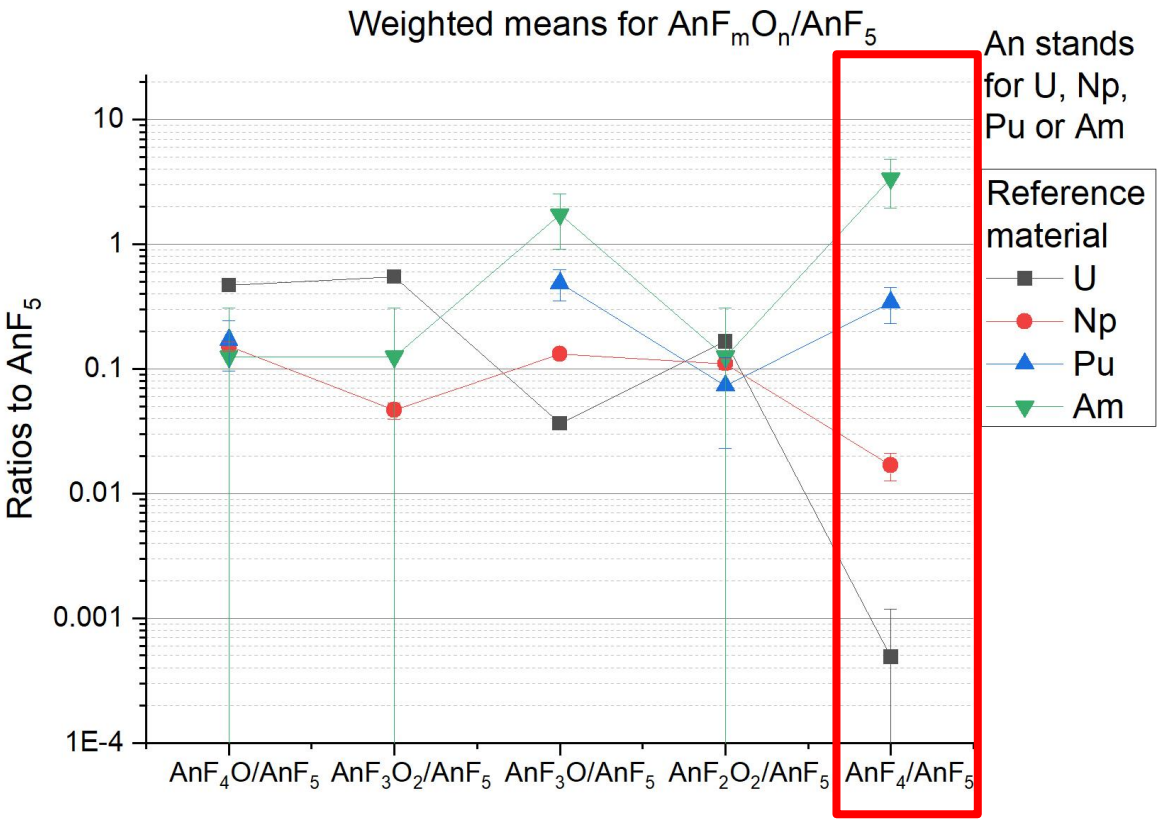

Analysis of irradiated samples

- **Ratios shift between beamtimes, separation for $AnF4_4^-$ remains stable**
  - **reference materials for every beamtime**

Analysis of irradiated samples

- **Ratios shift between beamtimes, separation for AnF_4^-/AnF_5^- is stable**
  - **Reference materials for every beamtime**

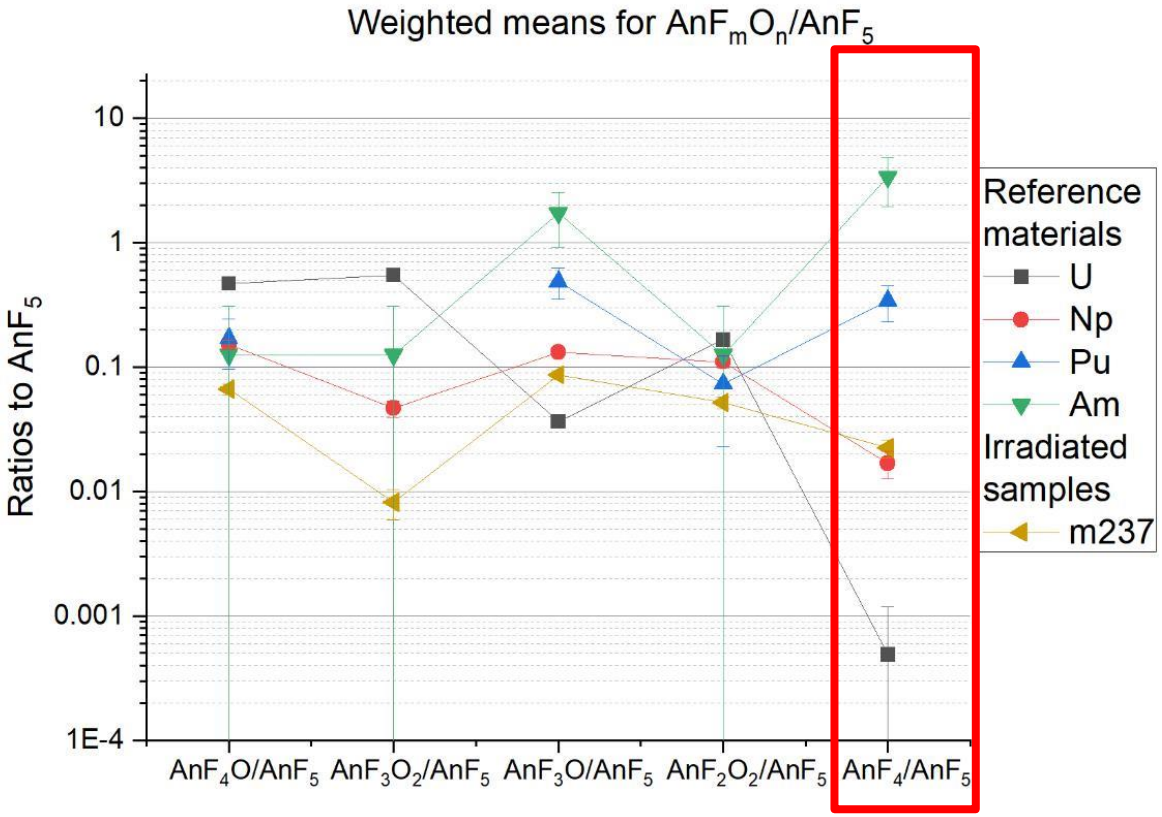

Analysis of irradiated samples

- Ratios shift between beamtimes, separation for AnF_4^-/AnF_5^- is stable
  - Reference materials for every beamtime
- QC for measurement: m237 on irradiated targets (~ 10% of m236)
  - Co-produced ^{237}Np!
  - m237 AnF_4^-/AnF_5^- ratio compatible with reference Np (1σ)

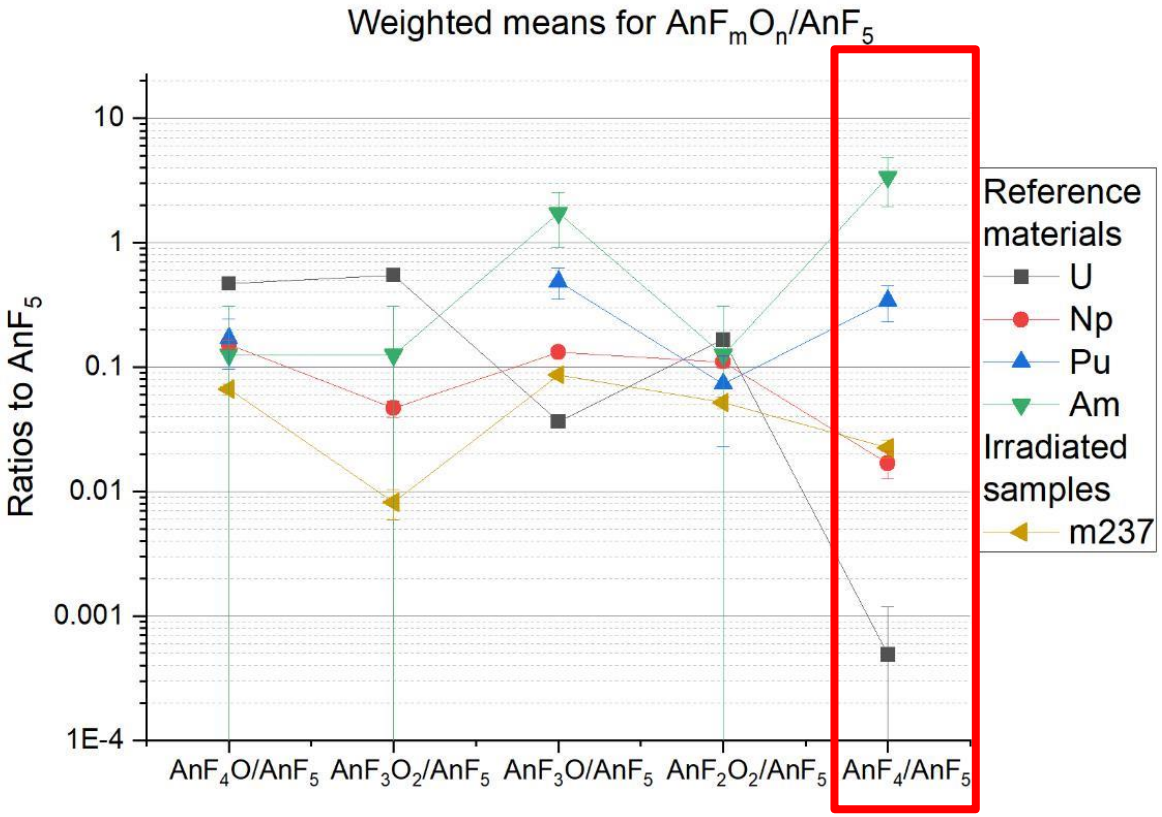

Analysis of irradiated samples

- **m236 AnF_4^-/AnF_5^- ratio is compatible with ref. Np (1σ)**
  - **Isobaric ^{236}U interference is negligible**

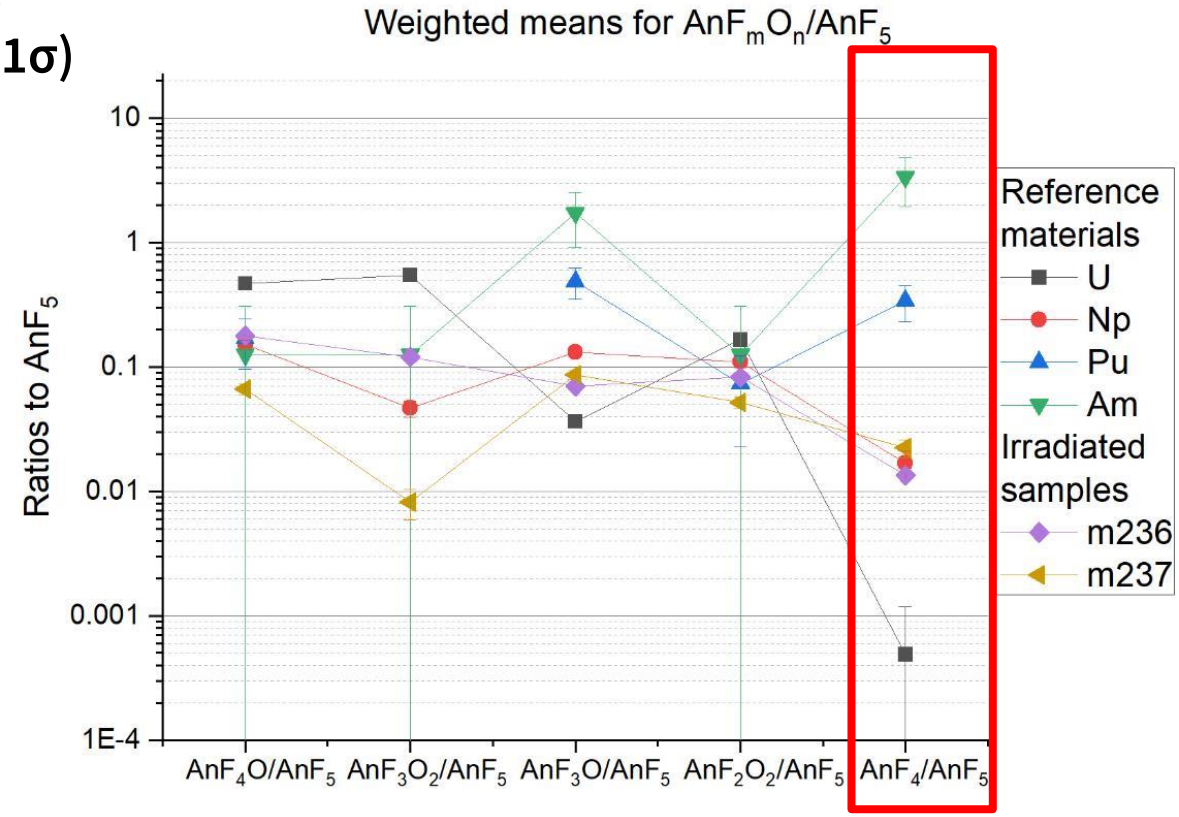

Analysis of irradiated samples

- **m236 AnF_4^-/AnF_5^- ratio is compatible with ref. Np (1σ)**
  - **Isobaric ^{236}U interference is negligible**
- **The production and separation of ^{236}Np was successful**

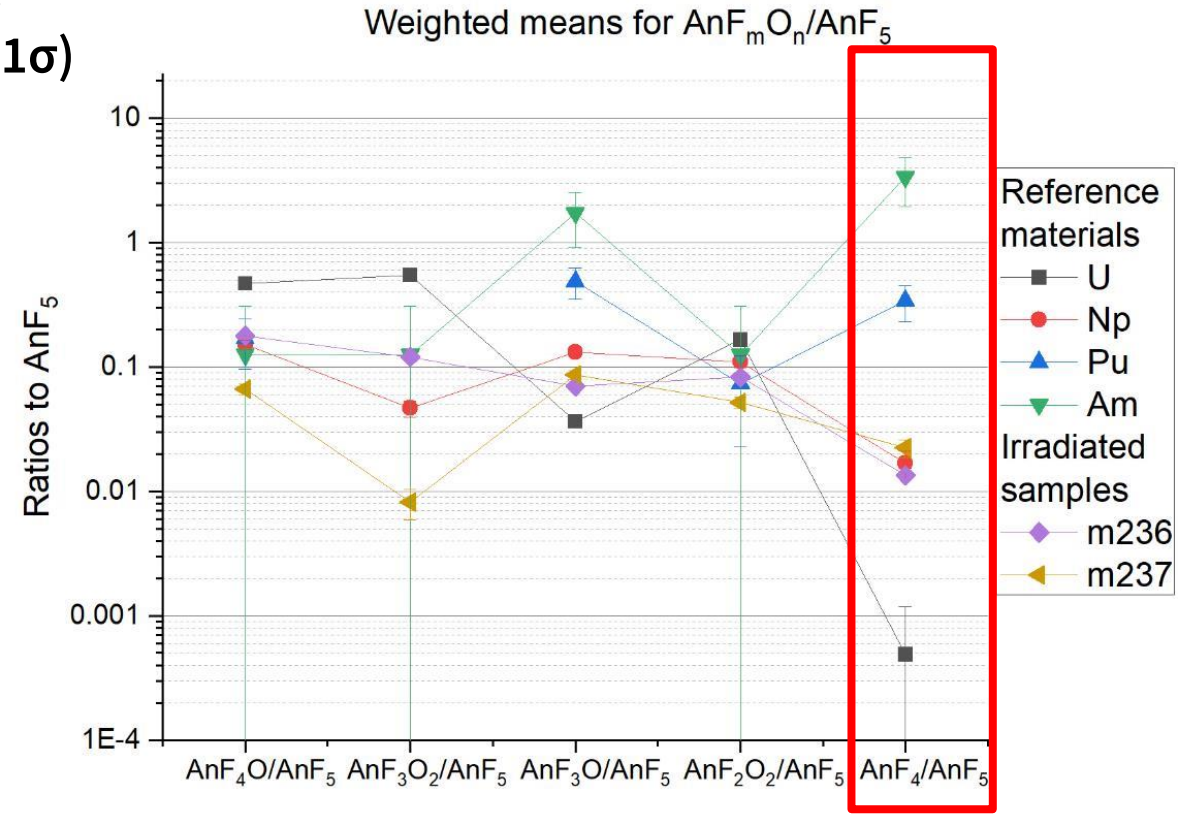

Conclusion and outlook

- The relative formation probabilities for

AnF_5^-	AnF_4O^-	$AnF_3O_2^-$
AnF_3O^-	$AnF_2O_2^-$	AnF_4^-

are characteristic for U, Np, Pu and Am
  - This distribution can be used to identify isobaric contaminations

- This method could show that ^{236}Np was successfully produced and chemically separated from ^{236}U
  - Isotopic spike for environmental ^{237}Np?
- The next steps:
  - ILIAMS separation of U and Np
  - Maximize NpF_4^- formation

Appendix

How stable are the ratios with increasing duration of the measurement?

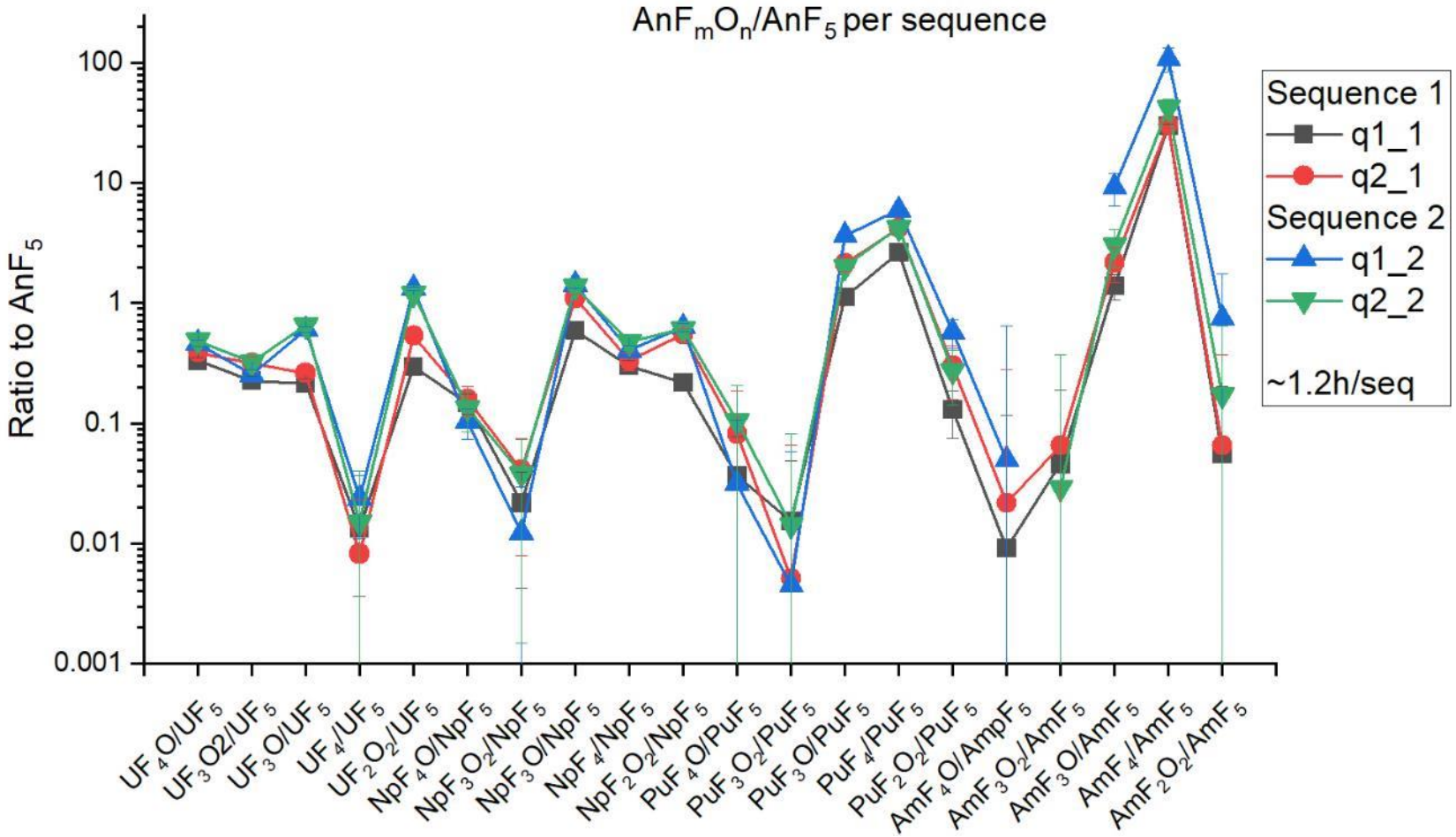

How stable are the ratios with increasing duration of the measurement?

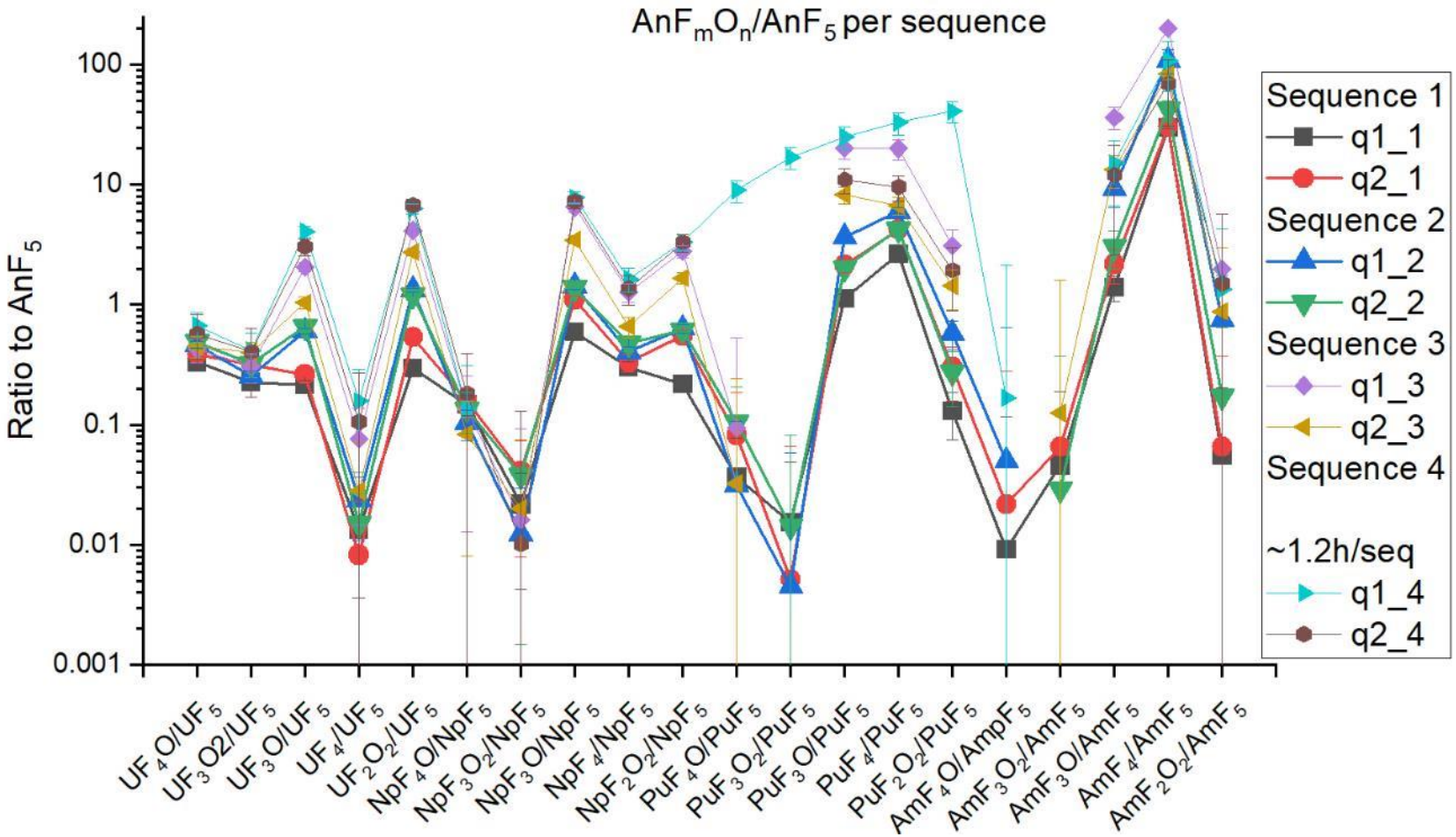

- Ratios change significantly after the first two sequences
- All targets should be measured for 2 sequences (~2.5h) for consistent results

How stable are the ratios for different mixing rates with PbF_2?

- Reducing mixing ratios to 1:4.5 increases lower fluorides/oxyfluorides
  - Similar to long measurement duration
  - Fluorine supply affects formation probablilities
- Increasing PbF_2 further (1:18) has no significant effect

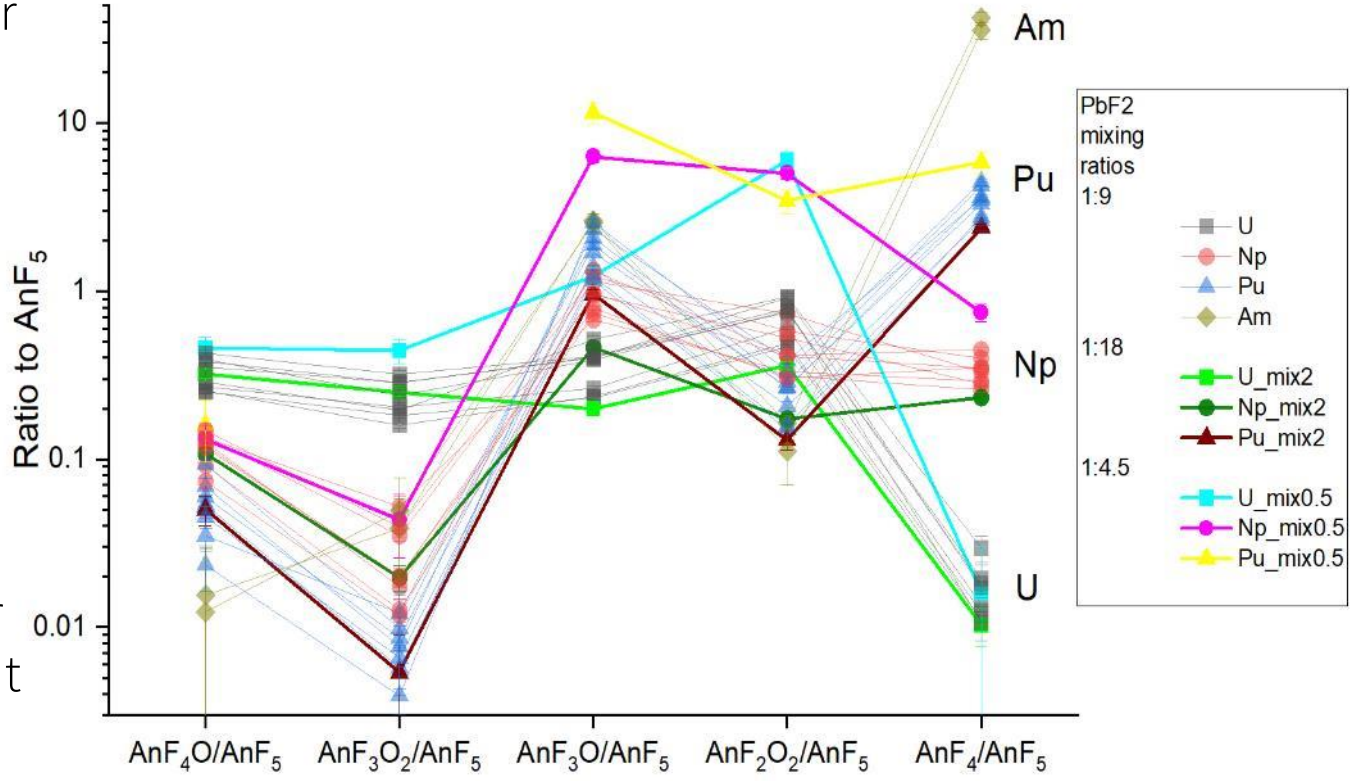

How stable are the ratios between Beamtimes
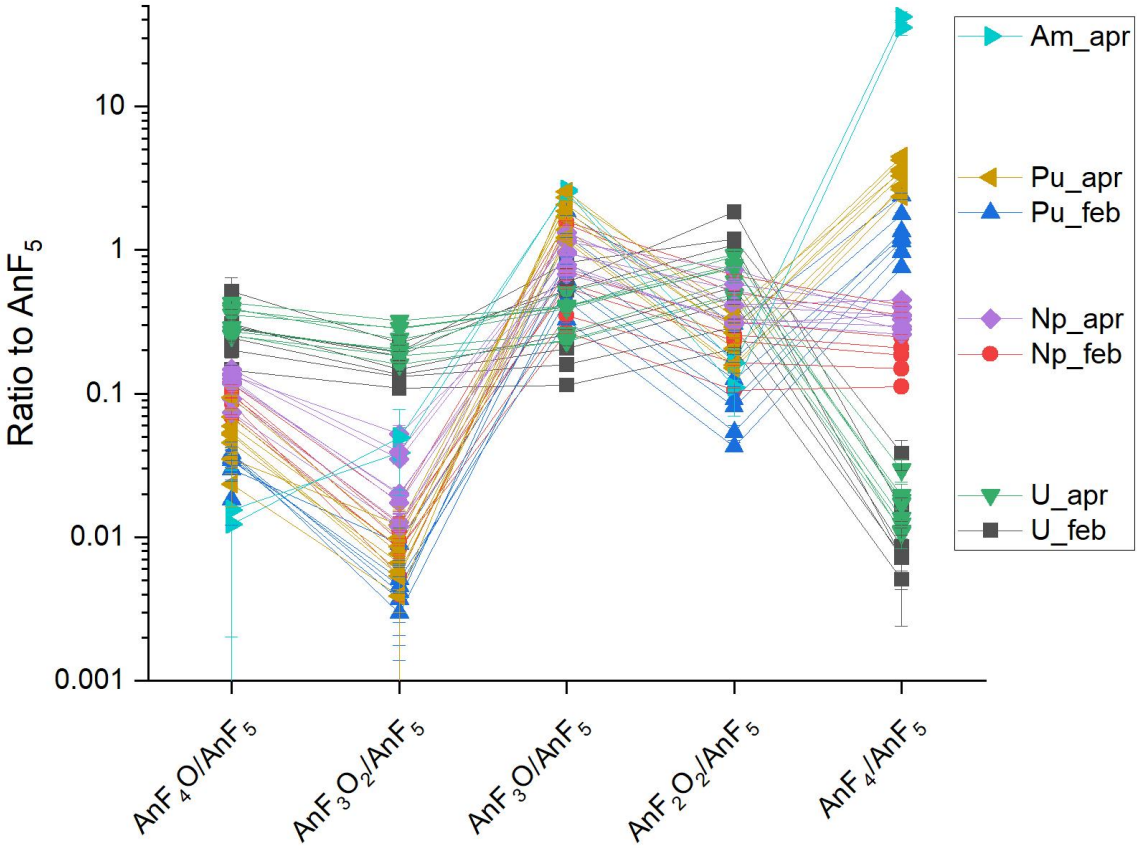
- $AnF_mO_n^-/AnF_5^-$ ratios change between beamtimes
  - Ion source conditions?
  - Tuning?
- Separation for AnF_4/AnF_5 remains stable
  - Method is robust against tuning variations!
- Reference samples have to be included in every measurement