Blade-board for stability studies of the slow-control functionality of the CMS muon DT µTCA backend

Dmitry Eliseev, Uwe Böttger, Thomas Hebbeker
RWTH Aachen, III. Physics Institute A
On behalf of the CMS Muon group

Motivation

Within the CMS Drift-Tube (DT) system, the µTCA crates in the counting room host a number of TM7 blade-boards [1,2], which concentrate the hit-data received from the DT chamber electronics. Like every µTCA blade board, the TM7 must interact with the µTCA Carrier Hub (MCH). The slow-control interaction is provided by the MMC (Module Management Controller) [3] which is implemented within the TM7 schematics [2]. After the release of the TM7 platform in 2015, the FPGA-firmware was maintained systematically, whereas the MMC firmware was updated only upon need in the last years.

In context of the Phase-II upgrade, a separate FPGA firmware branch was established [4] for the TM7 hardware platform. This firmware is handling interactions of TM7-based boards with the newly developed CMS Phase-II on-chamber DT electronics. A bunch of TM7 boards with this new FPGA firmware were participating in the DT slice test campaigns [4]. Within this bunch, some issues were observed in the recent time:

- We discovered occasional communication losts with the TM7 boards in the counting room: communication with TM7 was not possible, until the board was re-inserted in the crate,
- Power-balancing between the Power Module Units (PMUs) within the µTCA crate was not functioning as expected.

In order to closely study and debug such behavior, a test-setup consisting of a µTCA crate with a number of TM7 boards was needed. Since the number of TM7 boards available within the DT project is rather limited, an alternative solution was proposed.

Proposed debugging solution

In order to spare DT project resources, we decided to provide a separate blade-board design (TM7-Dummy) which would feature:

- Emulation of the TM7 in the extent of MMC functionality;
- High power draw;
- Inexpensive and simple in production;
- Convenient debugging possibilities.

Image credits: Andrea Triossi, Disney+

Key features

- Common MMC functionality implemented;
- Switchable DC load on the Payload rail (48W);
- Phased-Locked Loop (PLL) chip – same as in the TM7 circuit;
- Various and handy interfaces for debug and user experience:
  - JTAG access to microcontroller;
  - Standard MMC LEDs;
  - Slide-switch to emulate the insertion handle;
- Simple access to relevant signals:
  - LHC clock (routed from backplane);
  - Modified LHC clock (passed through PLL chip);
  - I2C (microcontroller <-> MCH);
  - Microcontroller GPIOs.

Block-Diagram of TM7-Dummy

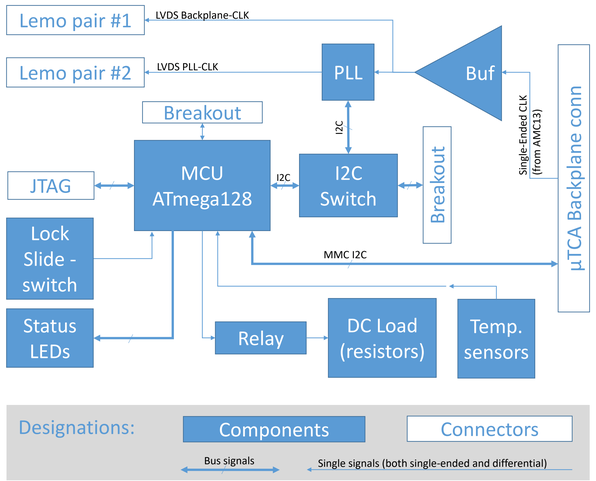

Debug cock-pit

Setup

Telnet terminal

NATview

Microchip Studio
(MCU monitoring via JTAG)

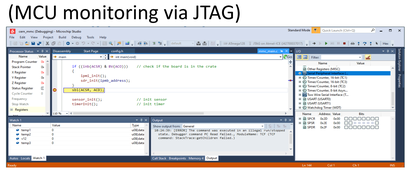

Experience and conclusions

- With the help of the TM7-Dummy we were able to reproduce the failure behavior -- same as observed in the counting room;
- The exact reason why TM7 was „disappearing“: overall power drawn by the TM7 was occasionally getting beyond the power budget requested during the initialization procedure. In its turn, the higher power needs of TM7 are caused by the more advanced and complex FPGA firmware running with the TM7 boards involved in the slice test campaigns;
- A setup with several TM7-Dummy boards helped a lot during setting up and verifying power redundancy provided by several PMUs within µTCA crate;
- In general the TM7-Dummy board has proven itself a helpful debugging instrument and a convenient tool for elaborating experience with the slow-control of the µTCA crate, which may be important if a newcomer should get to know the MMC firmware.
- With the good user experience we are aiming to develop the second version of this service board.

Next iteration of the Blade-Board

With the next version we are going to provide some further debugging options. However power management and simple diving in the µTCA and MMC context will stay in focus. Together with the full functionality of the first version the second version will feature:

- Switchable in **steps** DC load – increased in total to 60W;
- The DC load is driven by MOSFETs instead of relay;
- Access to some RX/TX pairs from the backplane (i.e. not only clocks);
- LEDs to indicate presence of management- and payload- voltages;
- Indication of the board‘s current consumption on the payload power rail;
- Board hosts a simple and inexpensive FPGA module Digilent Cmod A7 [5];
- Altium-based schematics (more common for CERN);
- Still staying inexpensive and easy to produce.

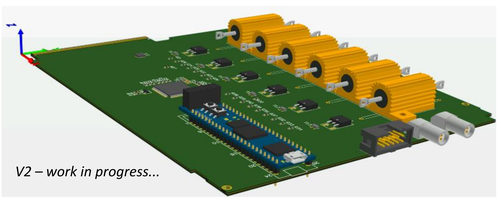

If you think such a board may also be useful for your tasks – it is a great time to talk with us: we could consider to extend the current list of v2 technical features also with your ideas!

References

[1] A. Triossi, A New Data Concentrator for the CMS Muon Barrel Track Finder, CMS-CR-2014-104 (2014)
[2] Á. Navarro-Tobar *et al* Phase 1 upgrade of the CMS drift tubes read-out system 2017 *JINST* 12 C03070
[3] J. Mendez, CERN MMC—User Guide, [online]: https://espace.cern.ch/ph-dep-ESE-BE-uTCAEvaluationProject/MMC%5fproject/default.aspx
[4] Bedoya, C. F. Implementation in a Sector of the CMS Drift Tube Chambers of a Muon Tracking Algorithm for Level-1 Trigger during HL-LHC. *2020 IEEE Nuclear Science Symposium and Medical Imaging Conference (NSS/MIC)*.
[5] Digilent Inc, CMOD A7 Reference Manual, 2016, [online]: https://reference.digilentinc.com/_media/cmod_a7/cmod_a7_rm.pdf

TWEPP-21
Topical Workshop on
Electronics for Particle Physics

Corresponding Author:
Dmitry Eliseev (Dr.-Ing.)
III. Physics Institute A, RWTH Aachen University
eliseev@physik.rwth-aachen.de

Federal Ministry of Education and Research
III. Physikalisches Institut
RWTH AACHEN UNIVERSITY