Very Forward Calorimeters at ILC (and CLIC):

attempted overview on **Connectivity Issues**

(as “material sent out in advance”
in view of a “mini-workshop” to be held at CERN on 16 September 2010)

HIGHLY COMPACT CALORIMETRY

two calorimeters:
LumiCal and BeamCal

both are **tungsten+(sensor) sandwich** structures, 30 layers

crucial to have **compact design** (keep Moliere radius small, allows to separate neighbouring showers !)

-> 1 mm space between W layers (for sensors + connectivity)

(maybe even FE electronics ??)

LumiCal: precision luminosity measurement
(≈ 30-80 mrad, bg. hit rate lower)
standard Si sensors o.k.;
high accuracy -> high granularity

BeamCal : electron background rejection +
fast luminosity monitoring
(≈ 5-40 mrad, bg. hit rate higher)
need radiation hard sensors (MGy / year);
granularity less important

LumiCal

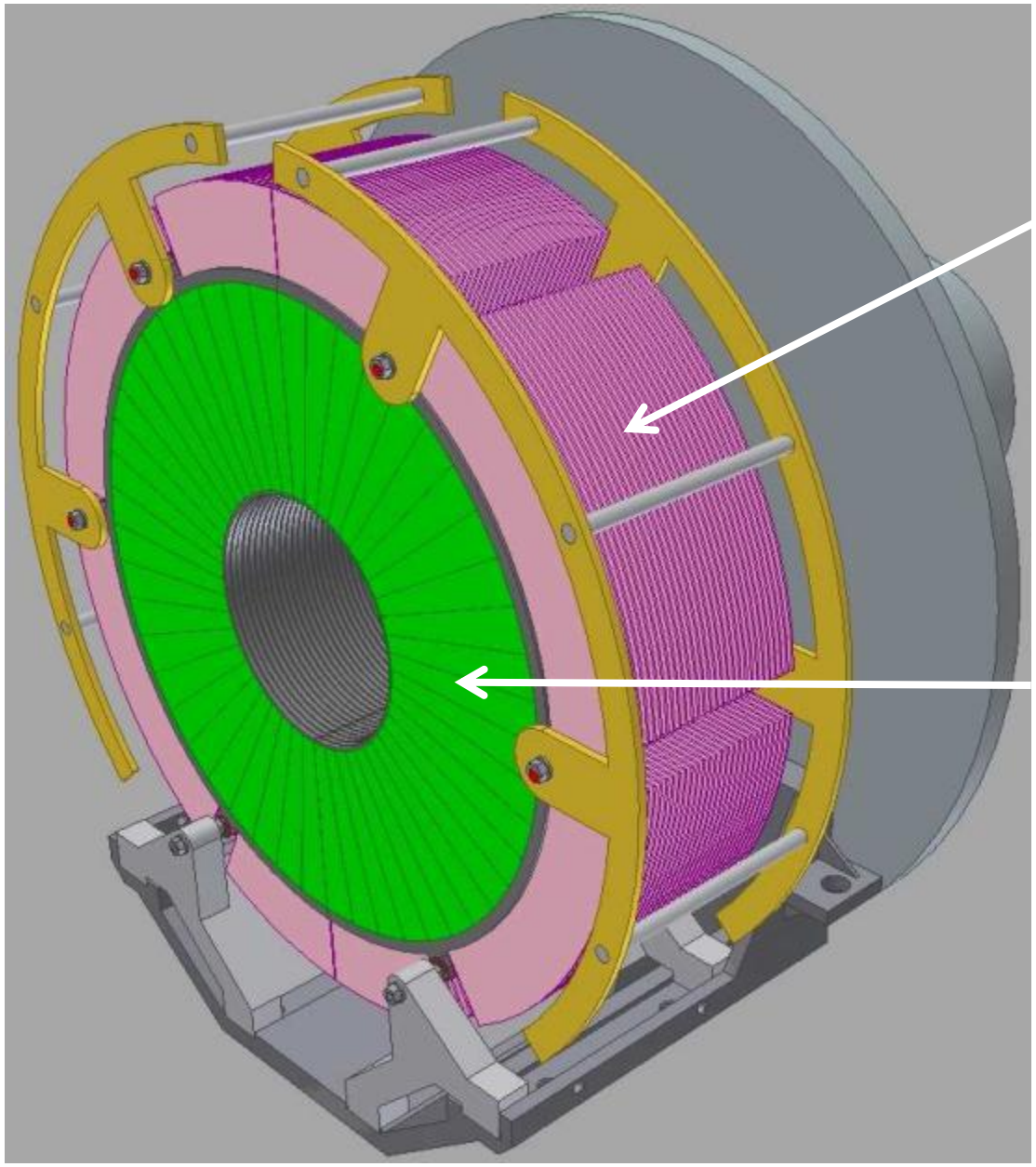

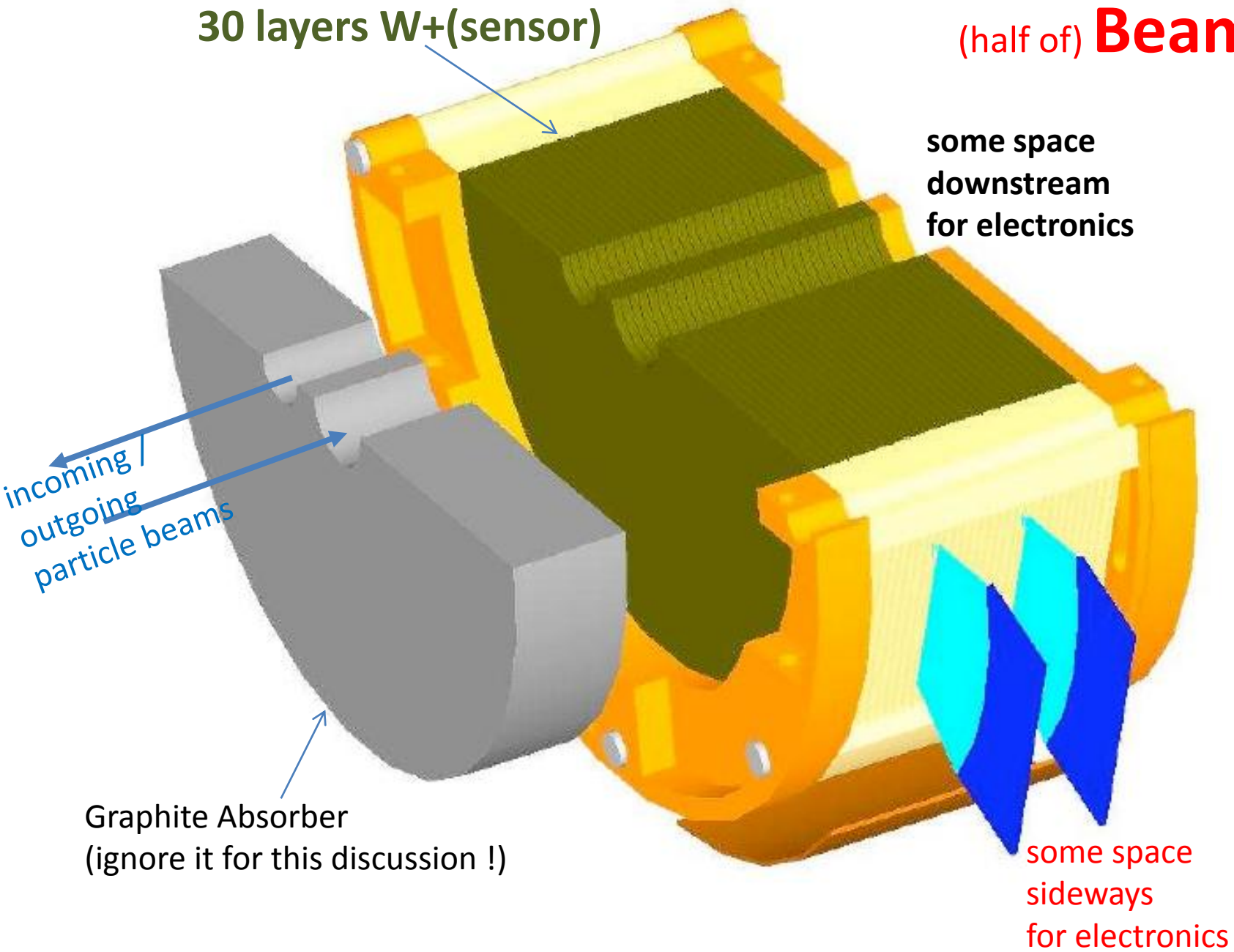
30 layers W+(sensor)
(half of) BeamCal
some space
downstream
for electronics
incoming /
outgoing
particle beams
Graphite Absorber
(ignore it for this discussion !)
some space
sideways
for electronics

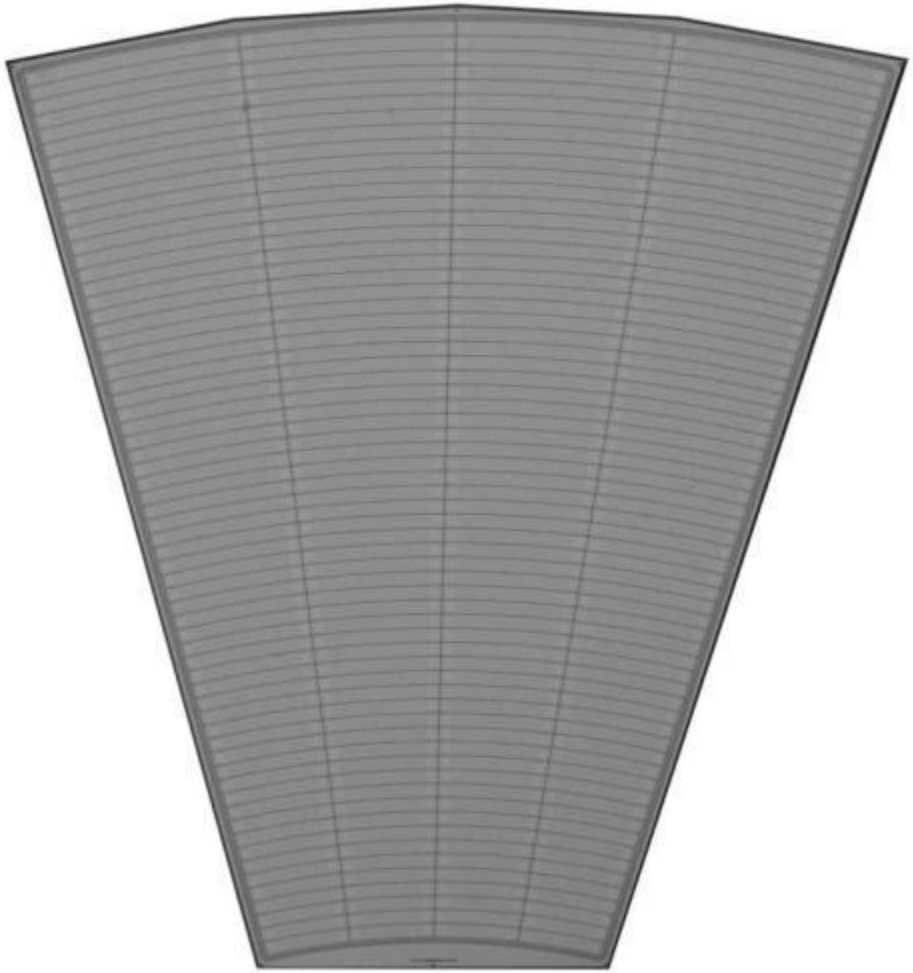

LumiCal Sensor Sector (wedge)
Prototype (Silicon - Hamamatsu)

BeamCal Sensor Sector (wedge)
Prototype (GaAs - Tomsk)

sensor thickness: 300 μm

- thickness of W plates: 3.5mm
- **sensor gap: 1 mm**
  including connectivity
- instrumentation gap: 2.5mm
- radial gap: ??
- radial clearance for cabling: ??

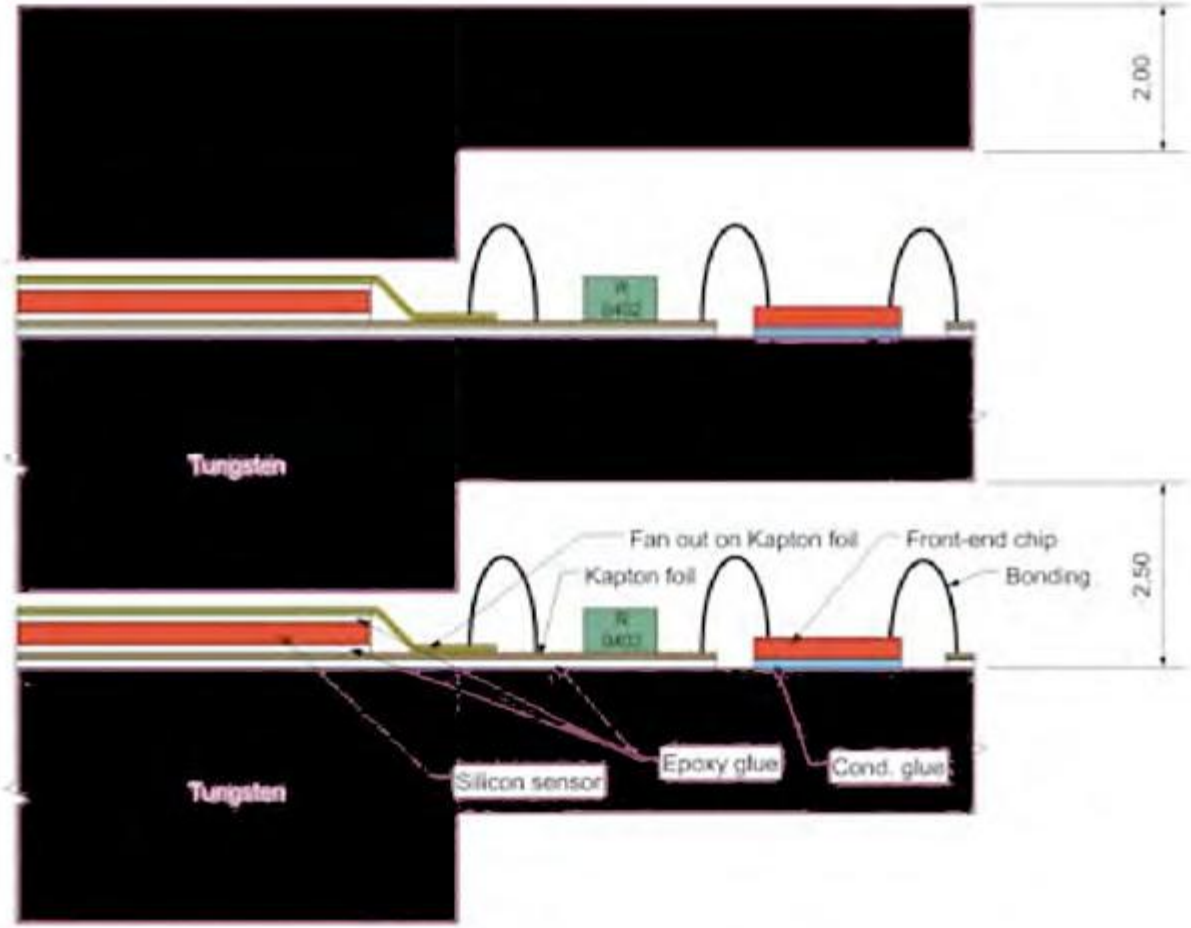

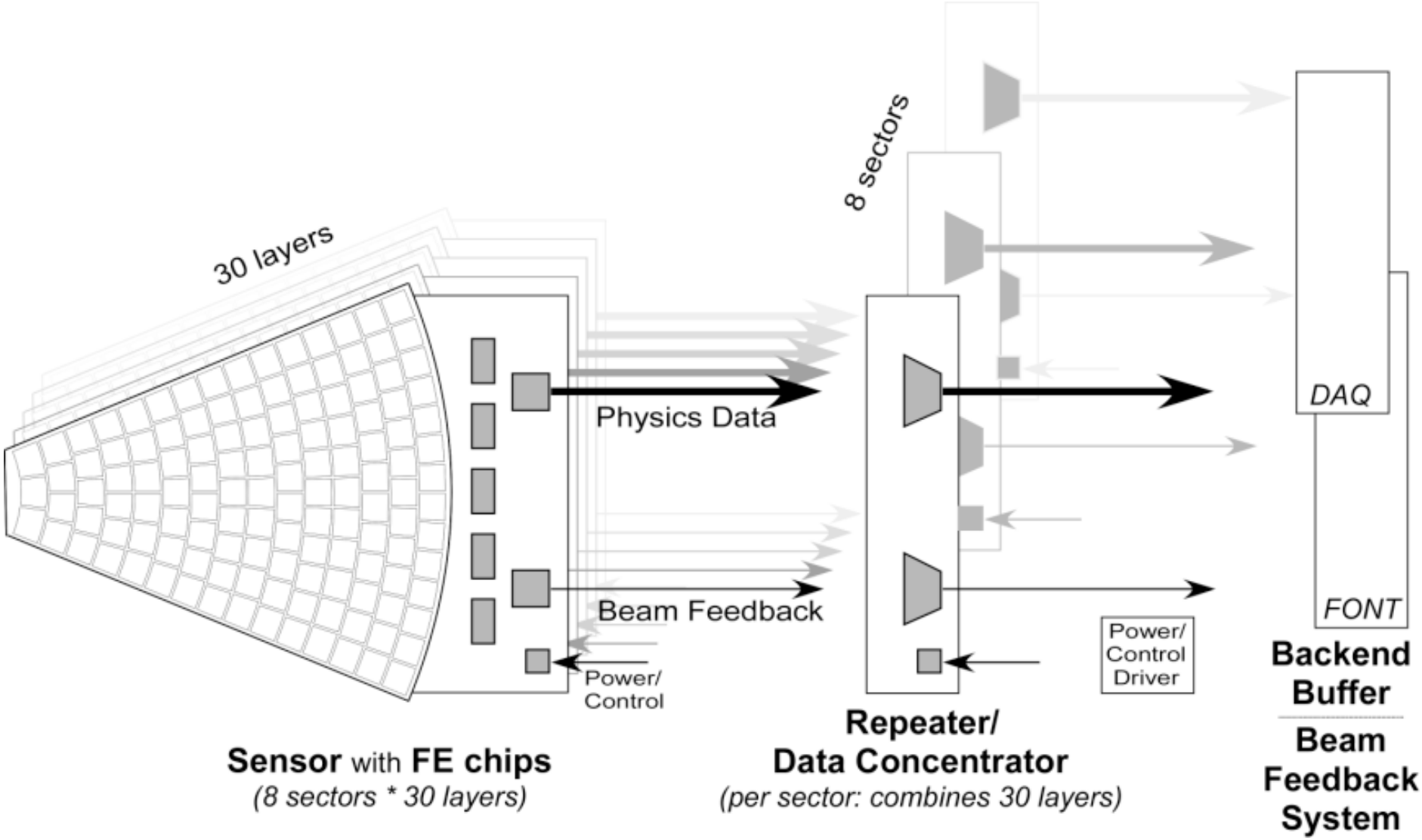

one possible Data Transmission Scheme

(H. Henschel, DESY Zeuthen)

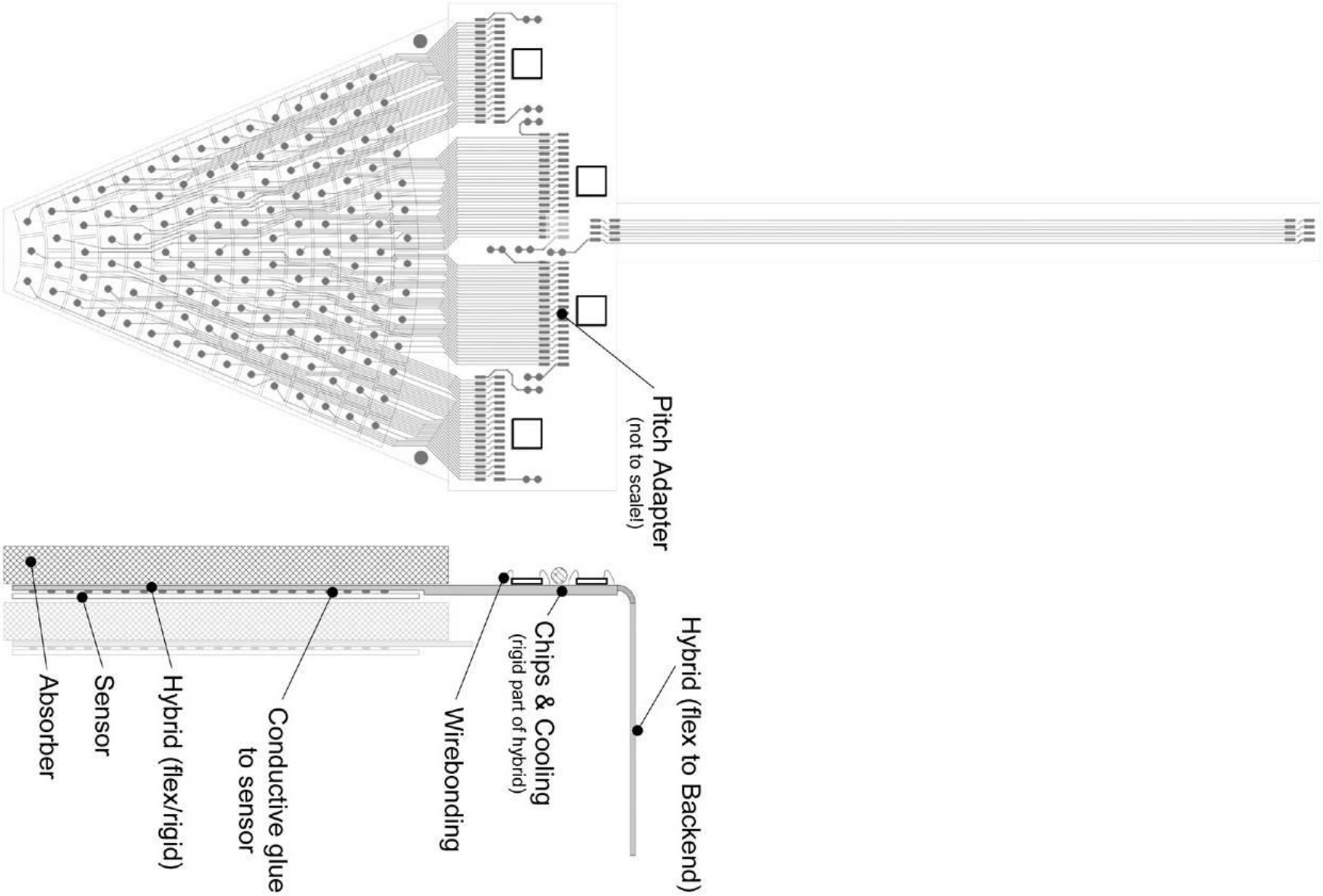

one possible Connectivity Scheme

(W. Lange, DESY Zeuthen)

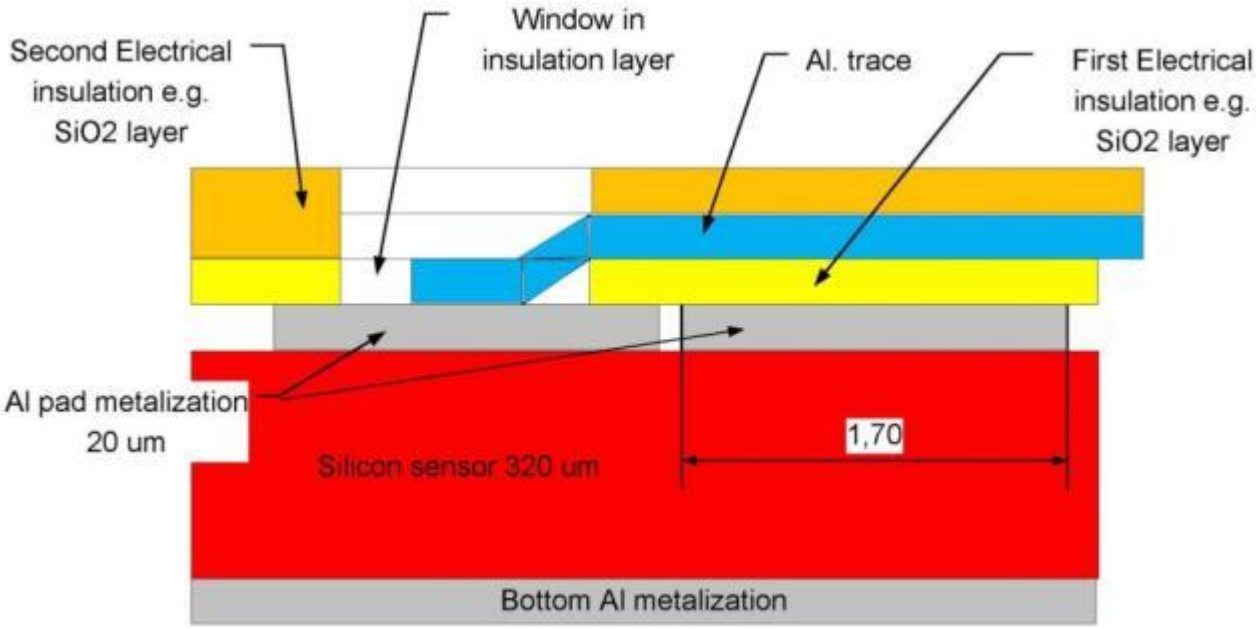

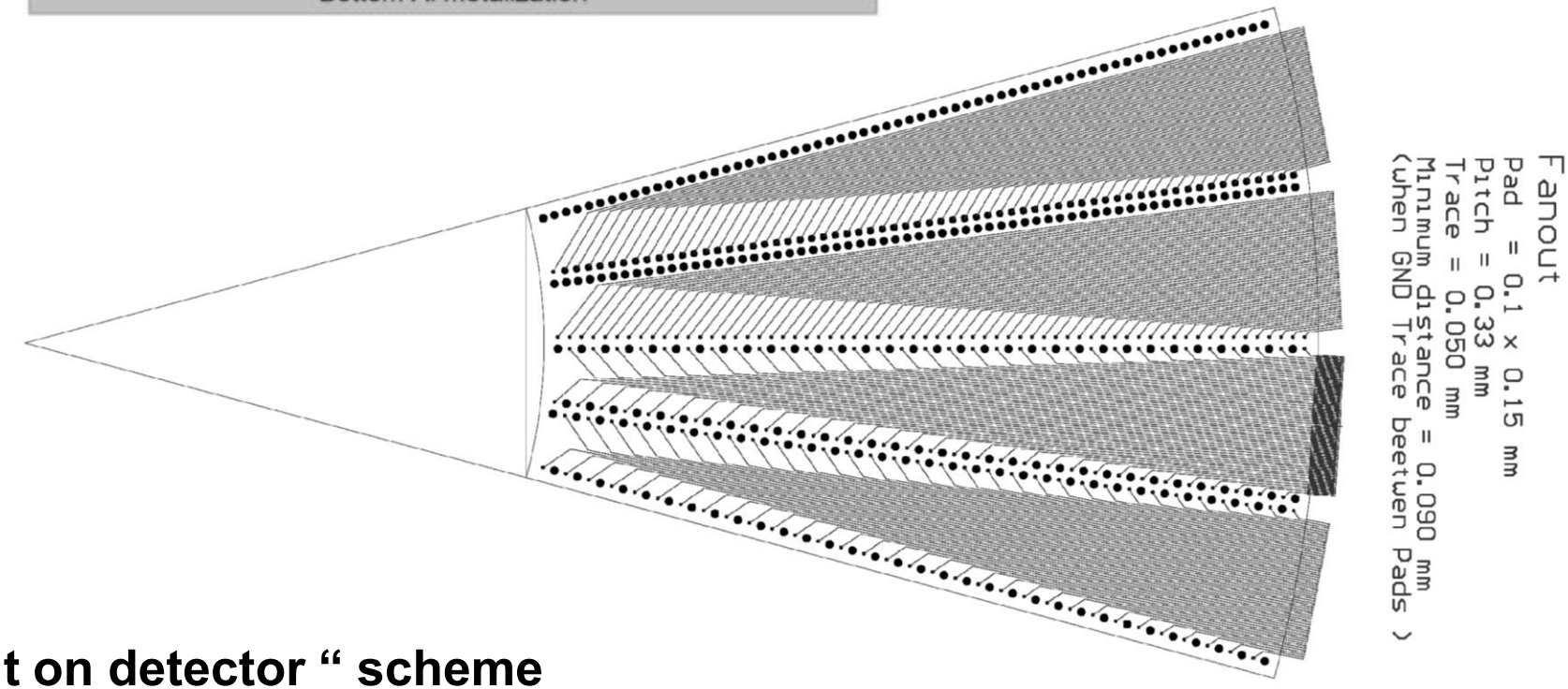

“fan-out on detector “ scheme

(W. Wierba, IPN Cracow, in contact with Hamamatsu)

Topics to be considered when discussing connectivity

(compiled by W. Lange, DESY Zeuthen)

A) „2nd metal layer“ on sensor
   A1) + connections/dielectricum (cf. previous page)
   A2) + readout chips „glued“ to it
   (pitch adapter inside 2nd metal layer)
   A3) + Silicon-on-Insulator structure for frontend chips
   (cf. Japanese project under way for „Pair Monitor“)

B) always consider connections from sensors to front-end **together with** the next steps, i.e. connections to „repeater“ or „data concentrar“ (cf. page 7)

C) never underestimate the complications due to **powering / cooling** etc.