Design & Manufacturing of the Beam Pipe

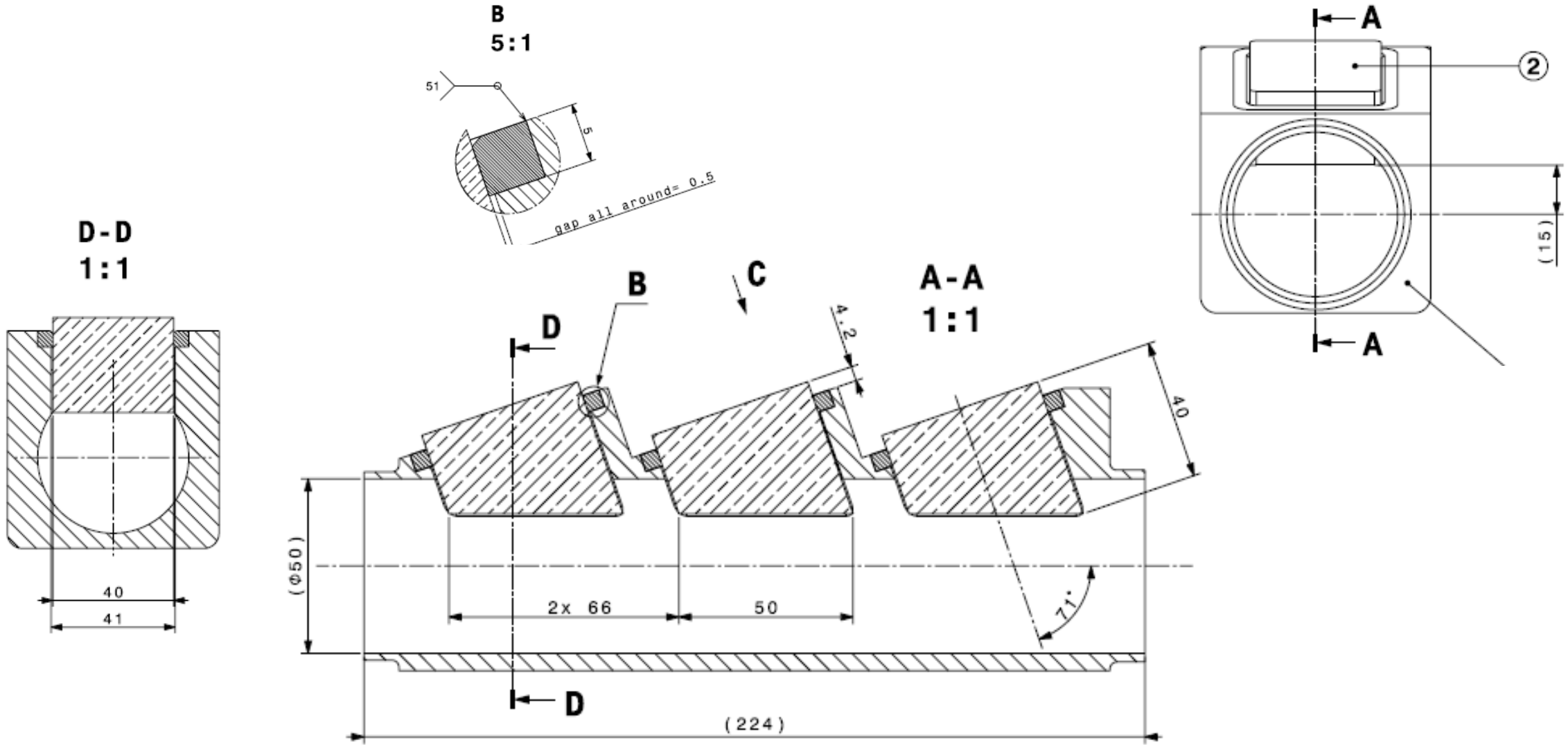

Drawings by N. Chritin

PCA ANALYSIS

- Beam position jitter : negligibly small ✔
- Beam angular jitter : negligibly small ✔
- Bunch trains : no destructive interference impact on total ChDR intensity ✔
- Sensitivity : >%20 for ∓ 10 fs ✔

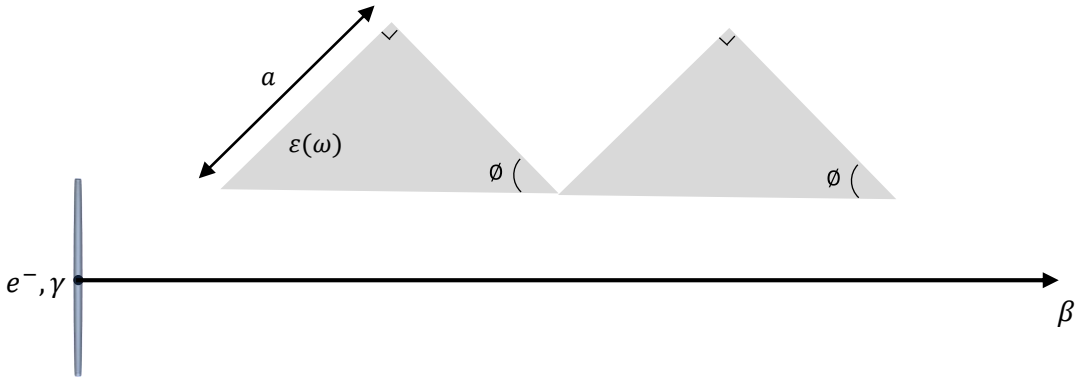

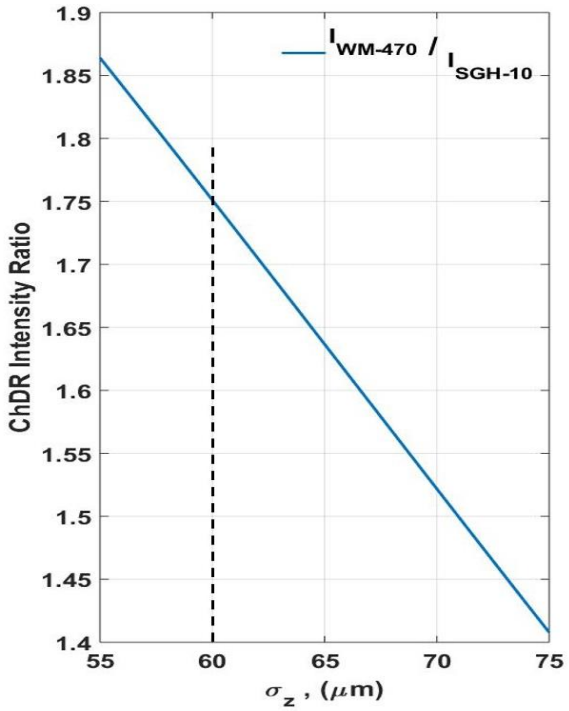

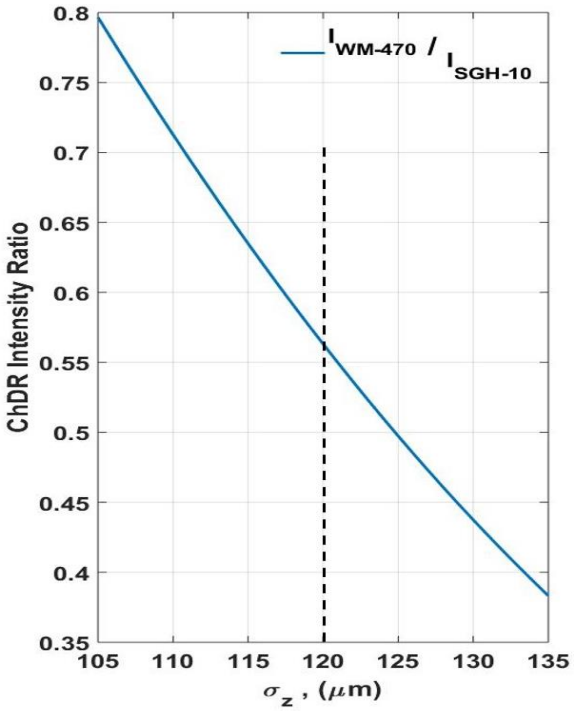

∓ 10 fs : >%20 change in the ratio

GEOMETRIES

only beam pipe

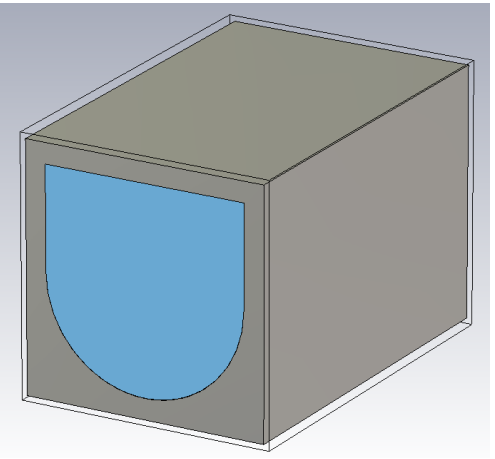

radiator not protruded

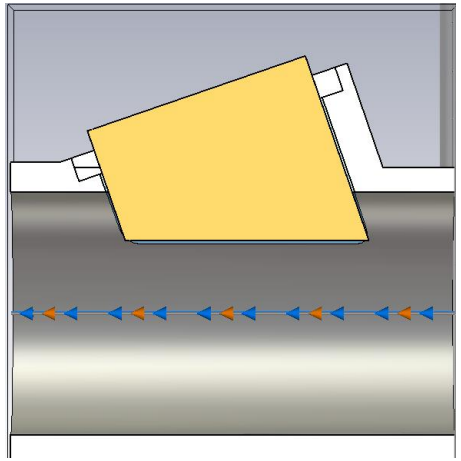

radiator protruded

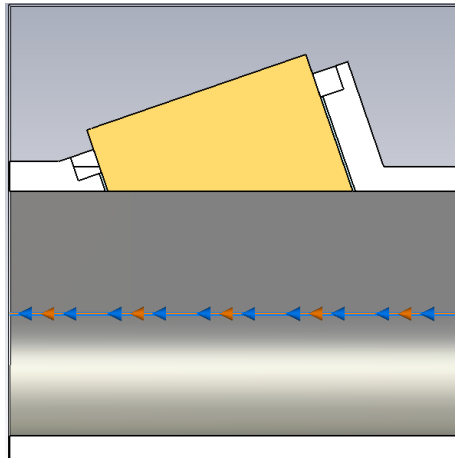

2 x radiator protruded

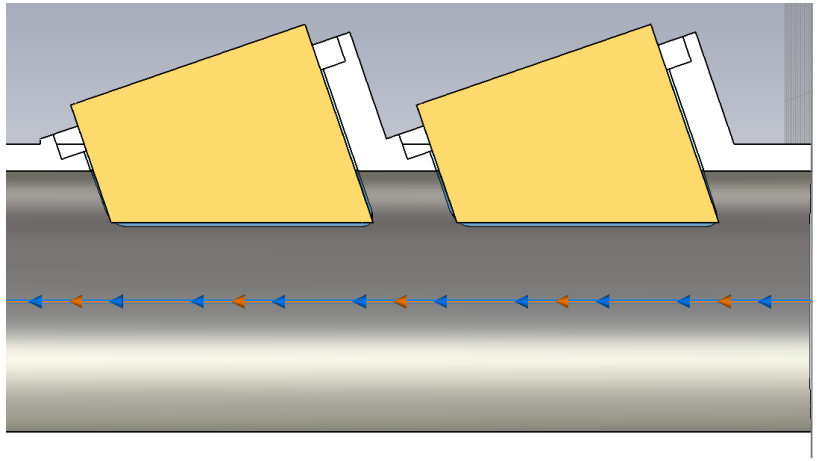

POWER FLOW

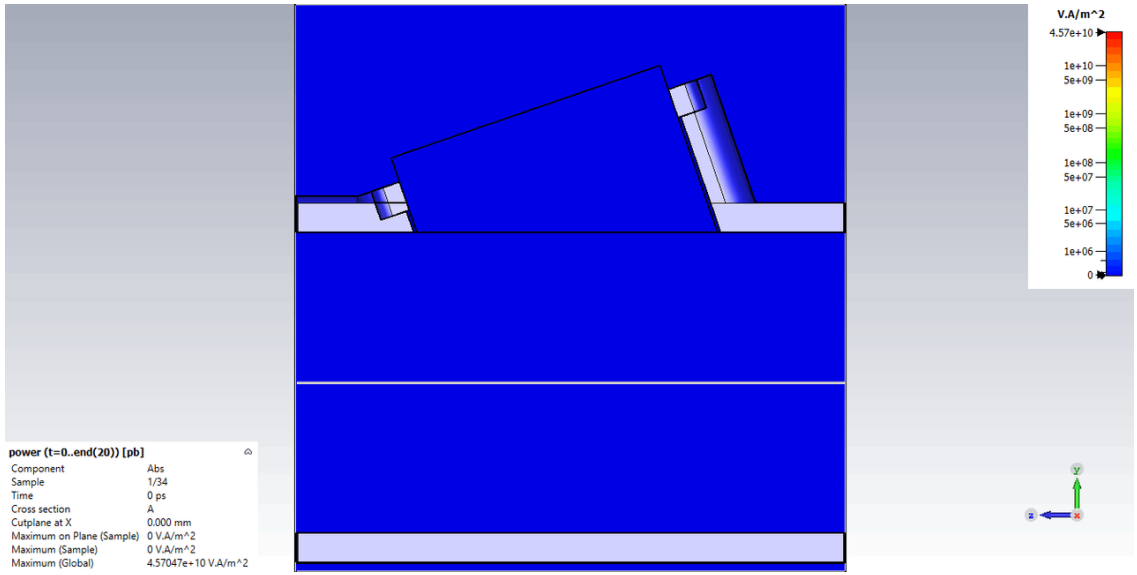
V.A/m^2
4.57e+10
1e+10
5e+09
1e+09
5e+08
1e+08
5e+07
1e+07
5e+06
1e+06
0
power (t=0..end(20)) [pb]
Component Abs
Sample 1/34
Time 0 ps
Cross section A
Cutplane at X 0.000 mm
Maximum on Plane (Sample) 0 V.A/m^2
Maximum (Sample) 0 V.A/m^2
Maximum (Global) 4.57047e+10 V.A/m^2

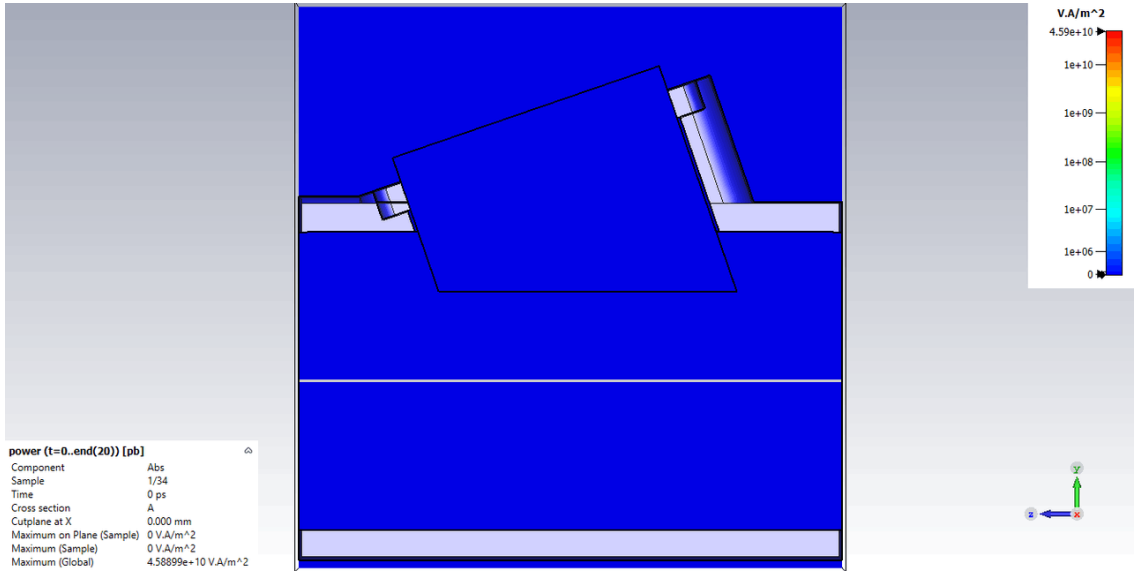
V.A/m^2
4.59e+10
1e+10
1e+09
1e+08
1e+07
1e+06
0
power (t=0..end(20)) [pb]
Component Abs
Sample 1/34
Time 0 ps
Cross section A
Cutplane at X 0.000 mm
Maximum on Plane (Sample) 0 V.A/m^2
Maximum (Sample) 0 V.A/m^2
Maximum (Global) 4.58899e+10 V.A/m^2

CATCH UP PROBLEM

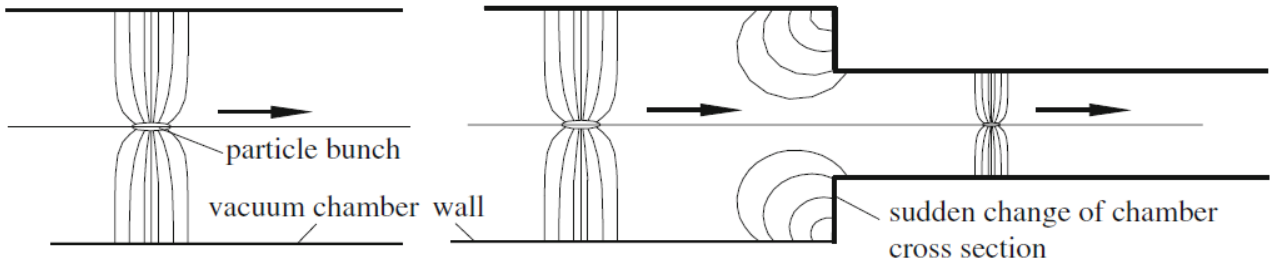

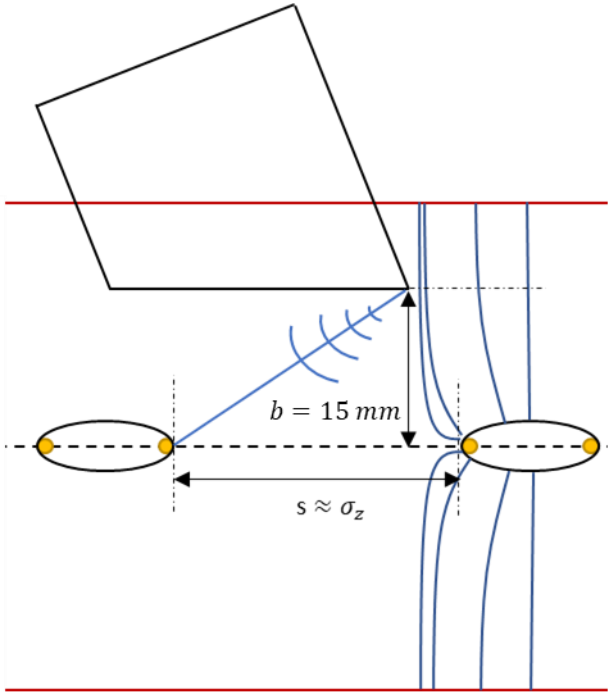

For 2 ps bunch

Catch up distance : $l \approx \frac{b^2}{2s} \approx 187.5\ mm$

$l \approx 83.3\ mm$

$b \leq 0.85\ mm \rightarrow l \approx \sigma_z$

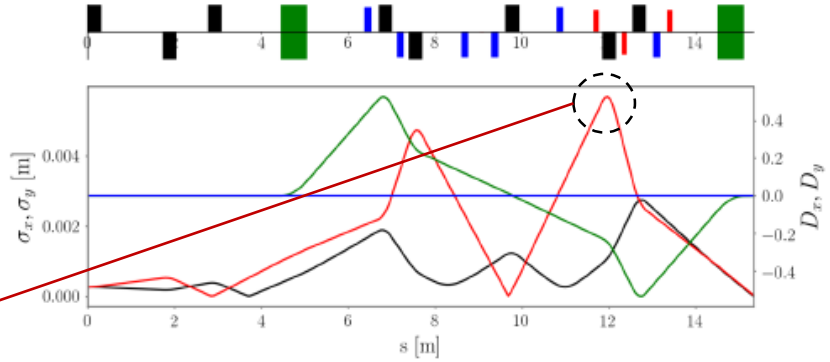

Figure 4.1: Beam size (σ_x: black, σ_y: red) and dispersion (D_x: green, D_y: blue) along the transfer line. Locations of elements are shown along the top, with dipoles (green), quadrupoles (black), sextupoles (blue) and octupoles (red).

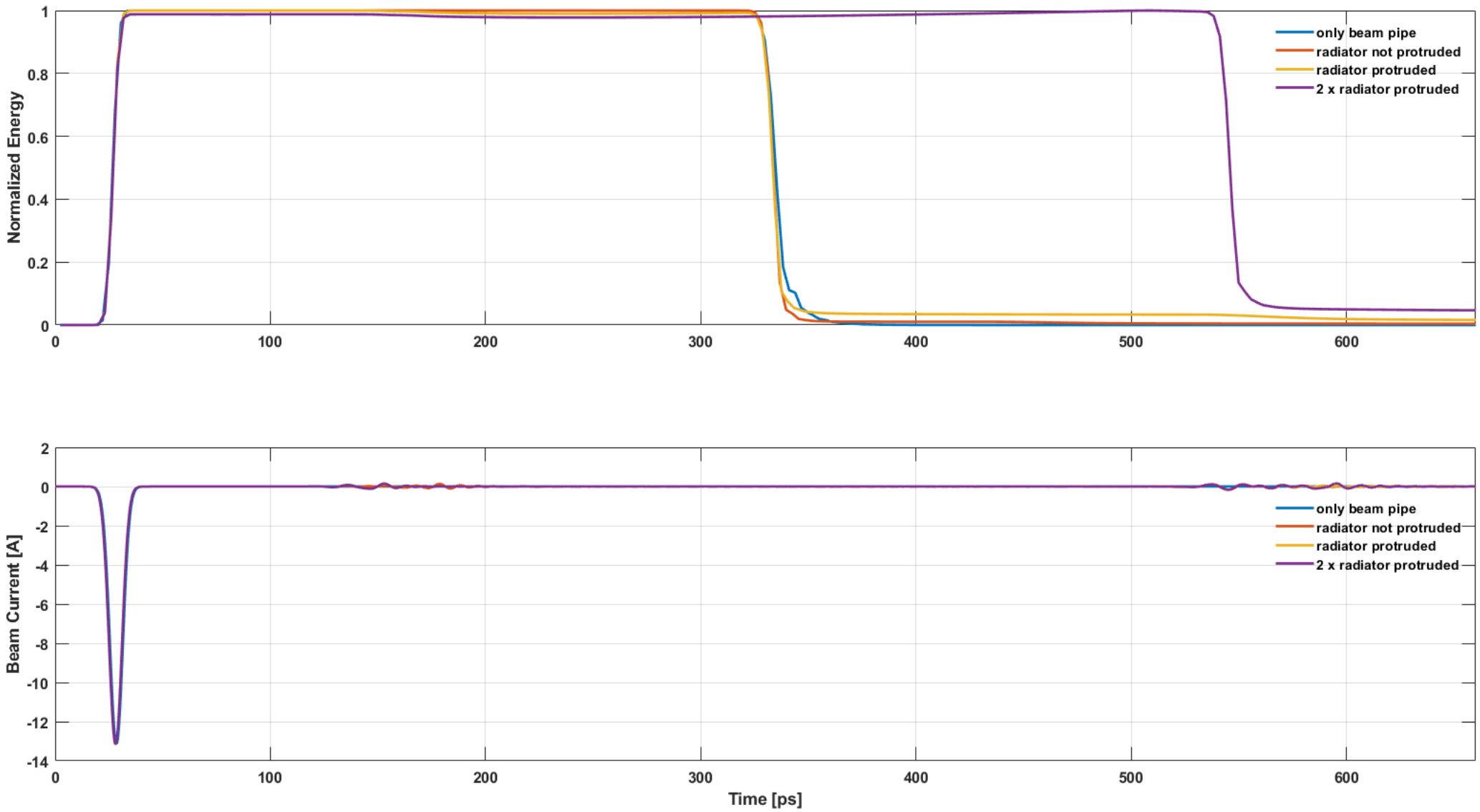
Normalized Energy
1
0.8
0.6
0.4
0.2
0
0
100
200
300
400
500
600
only beam pipe
radiator not protruded
radiator protruded
2 x radiator protruded
Beam Current [A]
2
0
-2
-4
-6
-8
-10
-12
-14
Time [ps]

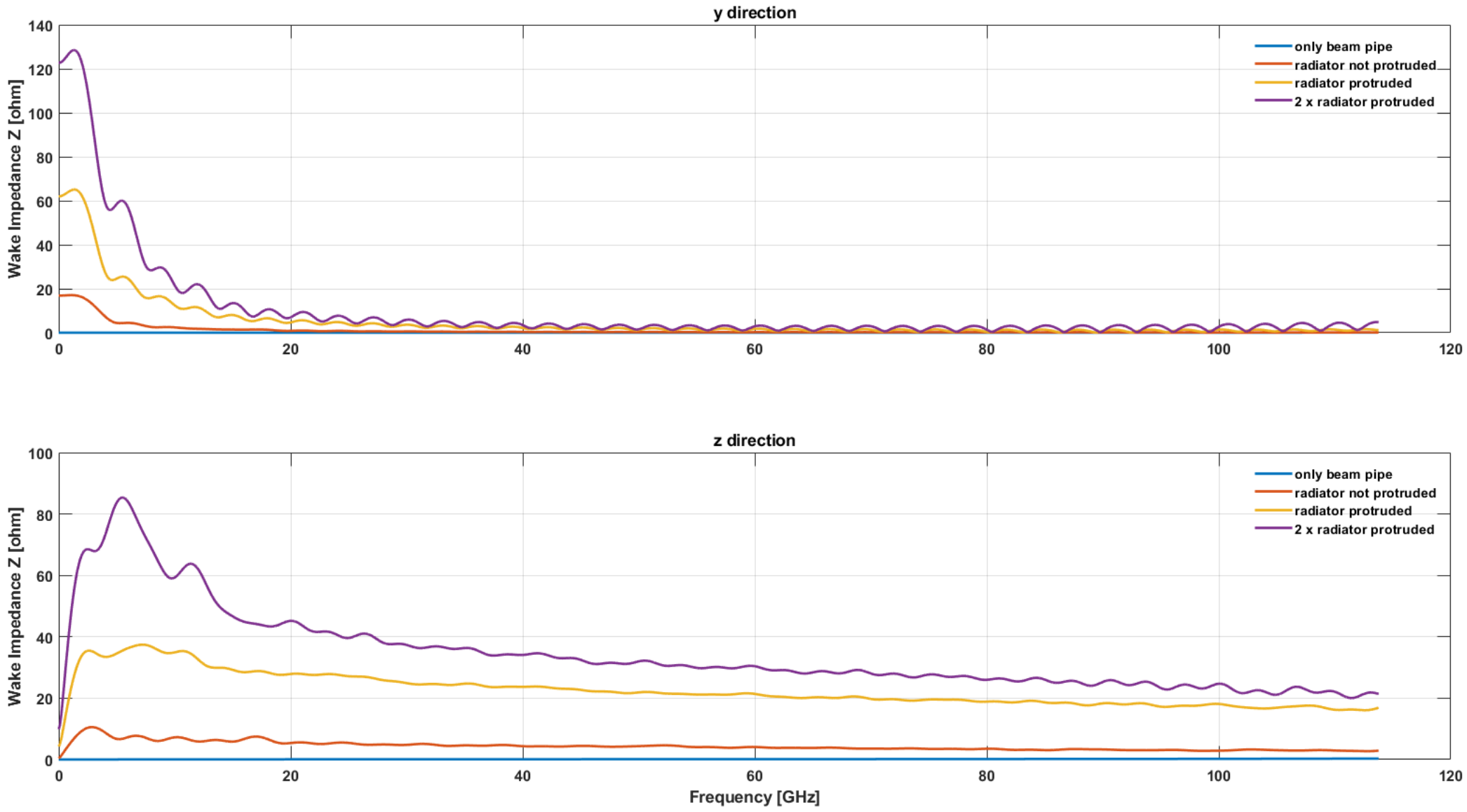
y direction
Wake Impedance Z [ohm]
140
120
100
80
60
40
20
0
0
20
40
60
80
100
120
only beam pipe
radiator not protruded
radiator protruded
2 x radiator protruded
z direction
Wake Impedance Z [ohm]
100
80
60
40
20
0
0
20
40
60
80
100
120
Frequency [GHz]
only beam pipe
radiator not protruded
radiator protruded
2 x radiator protruded

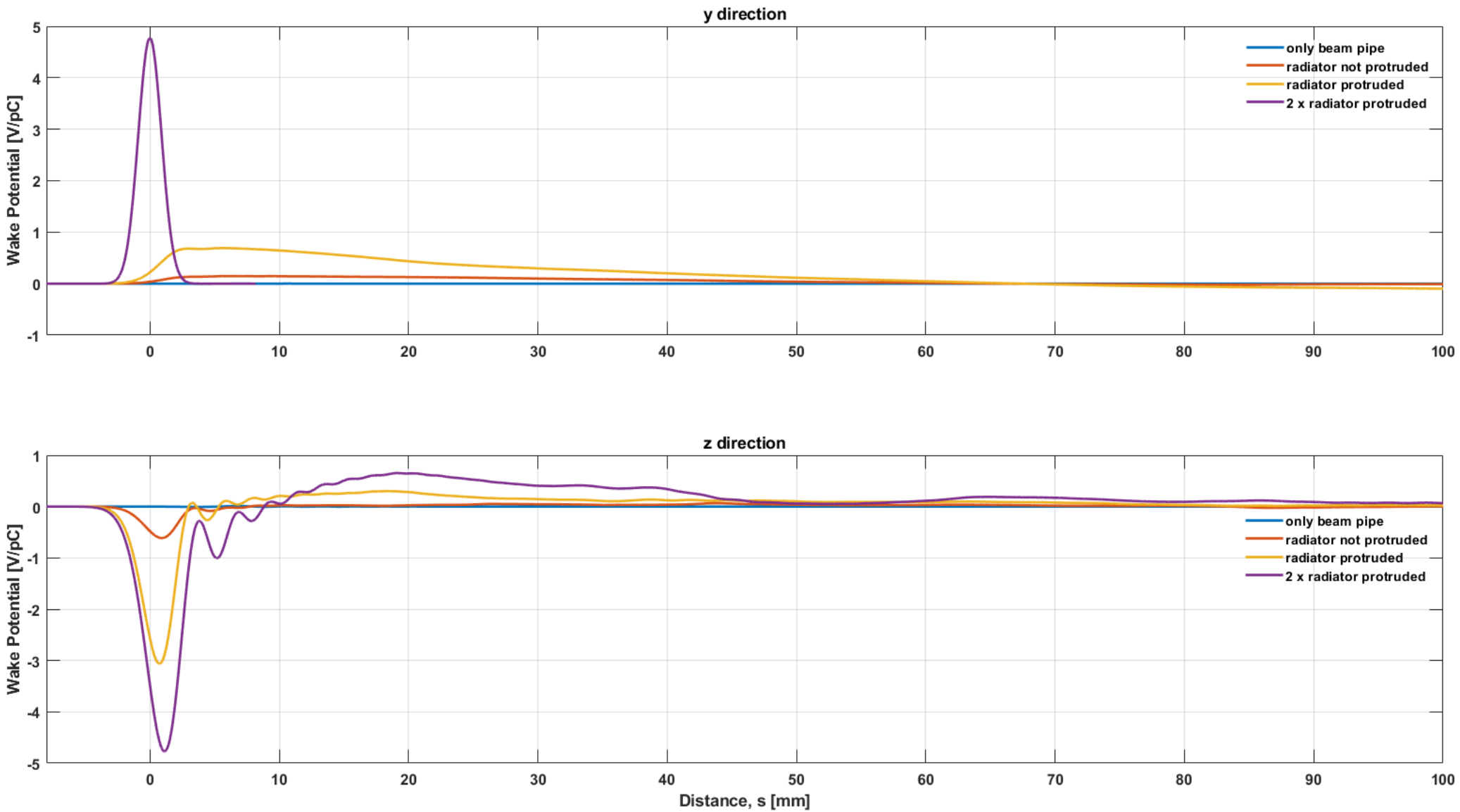
y direction
Wake Potential [V/pC]
only beam pipe
radiator not protruded
radiator protruded
2 x radiator protruded
z direction
Wake Potential [V/pC]
only beam pipe
radiator not protruded
radiator protruded
2 x radiator protruded
Distance, s [mm]

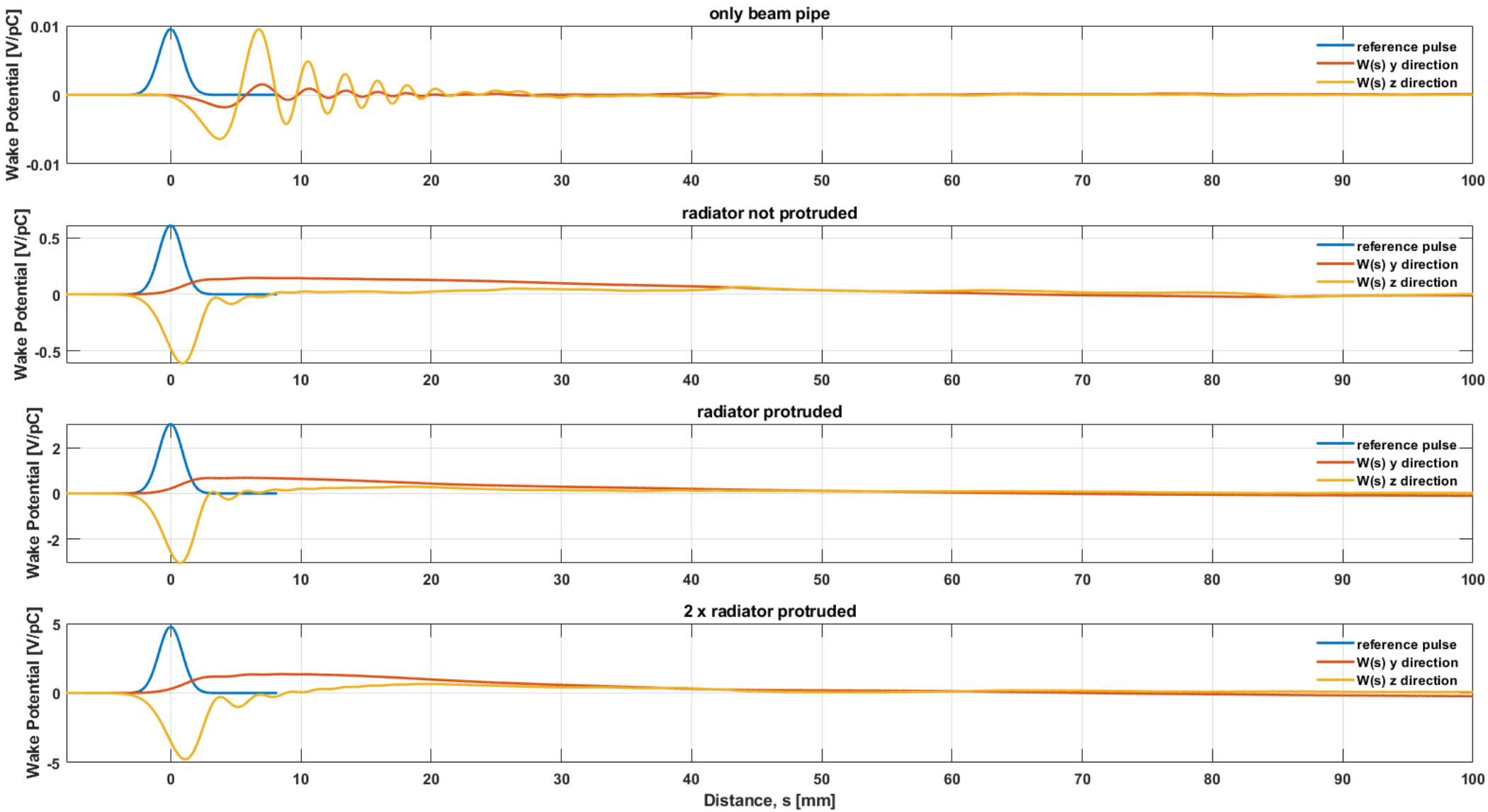
only beam pipe
radiator not protruded
radiator protruded
2 x radiator protruded
Wake Potential [V/pC]
Distance, s [mm]
reference pulse
W(s) y direction
W(s) z direction
0.01
0
-0.01
0.5
-0.5
2
-2
5
-5
0
10
20
30
40
50
60
70
80
90
100