3rd Forward Physics Facility (FPF) Meeting, 25-26 October 2021

Civil Engineering Study Update

Kincső Balázs, John Osborne SCE-DOD-FS

Date: 25/10/2021

Introduction

- **Experimental Requirements and CE considerations**
- **Option 1: Alcoves in the UJ 12**
- **Option 2: Purpose built facility**
- **Next Steps**

Experimental requirements and CE consideration

Requirements:

- Experimental area approx. 500-600 m away from LHC P1 or P5 on the Line of sight (LoS)
- Space for experiments
- Access needed for construction, installation and maintenance

CE considerations:

- Existing infrastructure
- Access for construction
- Disruption to LHC machine
- Geology
- Cost

CE Study Update- Considered options

- **Option 1 – UJ12 Alcoves**

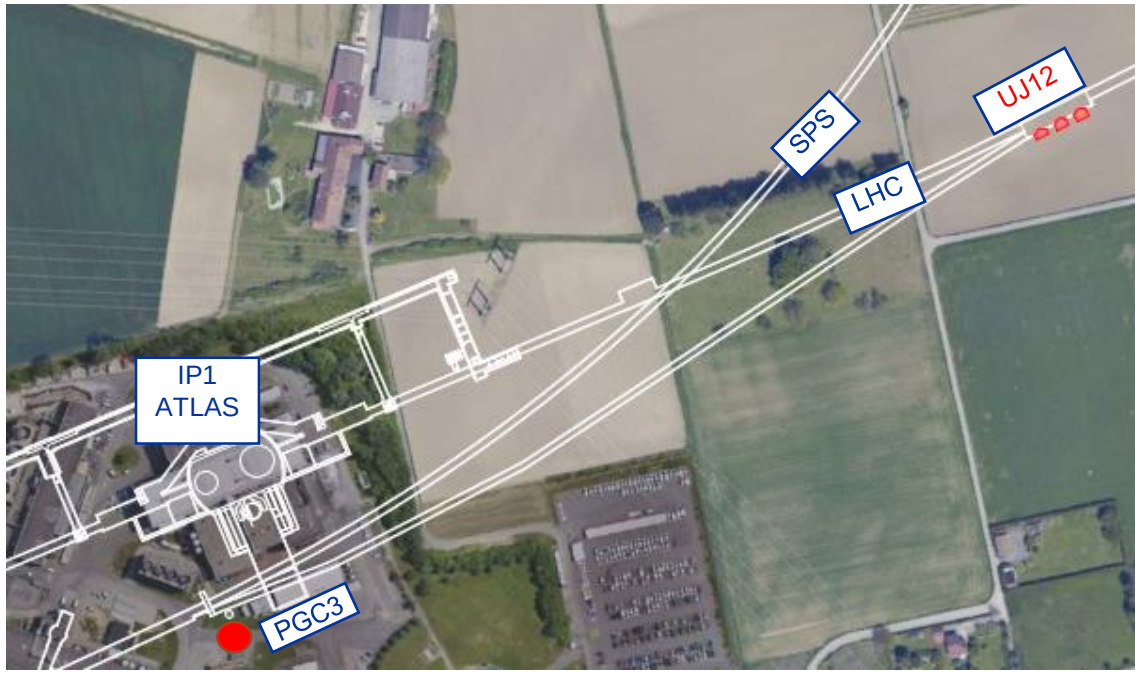

- **Option 2 – Purpose built facility**

Option 1 – Alcoves in UJ12

- **Advantages**
  - Lowest cost and disruption
- **Disadvantages**
  - Experiments need to be designed around what is possible
  - Likely only 2-3 alcoves possible around 3mØ
  - Stability of existing cavern
  - All existing services in UJ12 need to be removed (This would include 4 LHC dipole magnets + 1 quadrupole magnet and 40-60m of the QRL cry-line)

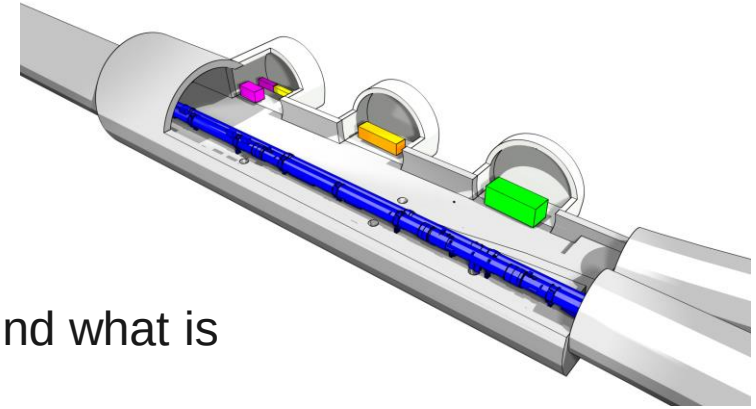

3D view

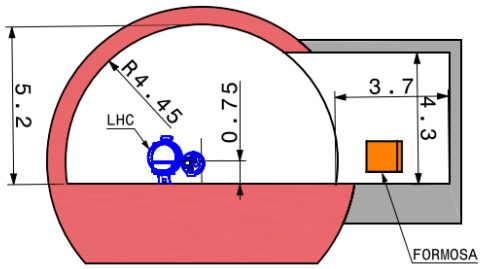

Alcove Cross Section at B-B

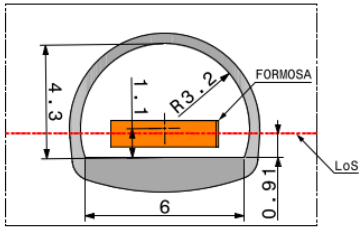

Typical Alcove Cross Section C-C

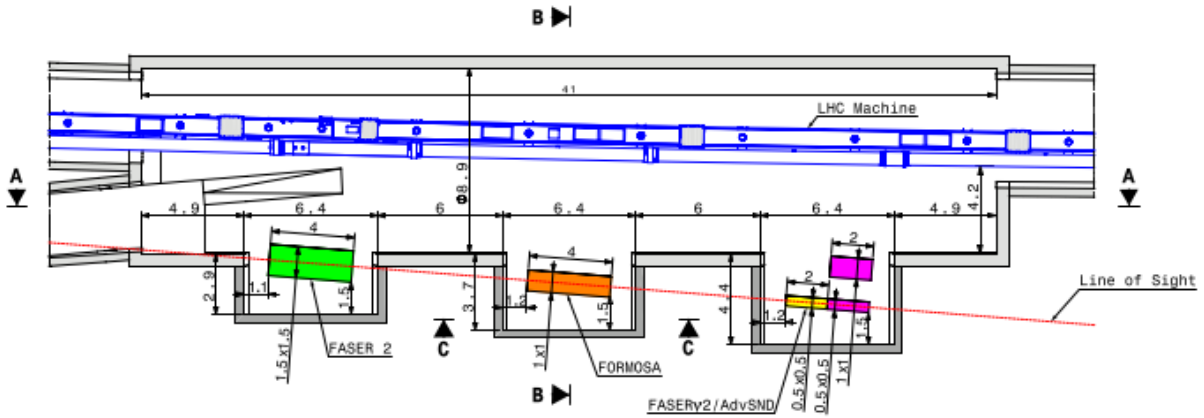

Plan view showing widening and alcoves

Option 2 – Purpose built facility

- **Advantages**
  - Designed around needs of experiments
  - Size/ length not constrained
  - Construction access far easier
- **Disadvantages**
  - More expensive
  - Construction still need to be coordinated with LHC shutdowns

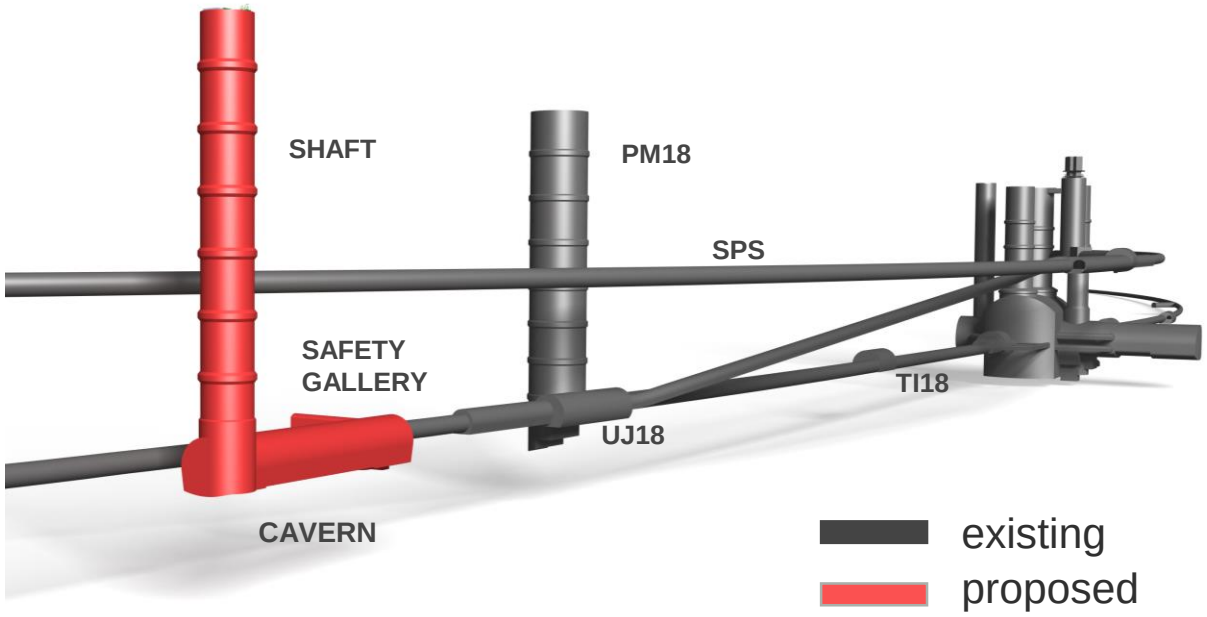

Option 2 – Purpose built facility

Proposed Layout

- 65 m long Experimental Cavern located on the LoS, approx. 612 m from IP1
- 9.1 m access shaft located on the top of the cavern
- Safety gallery connecting the cavern to the LHC to avoid dead-end

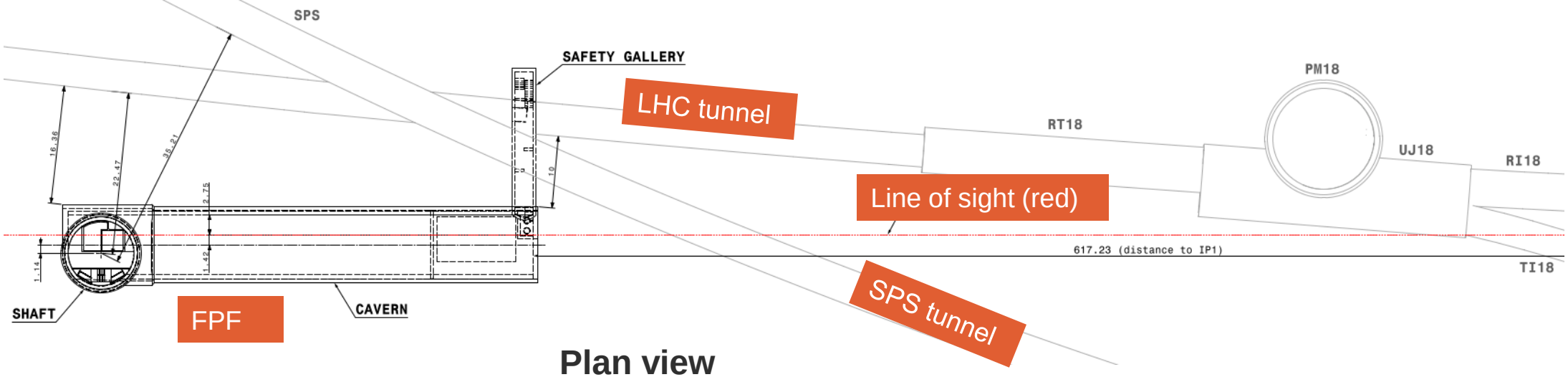

Plan view

Option 2 – Underground structures

- 9.7 m wide cavern to allow access for transport and siting of some services
- Experiments centralised on the line of sight, 1.5m above the floor
- Floor parallel to the LoS, 1.25%fall
- Trench under the LAr detector to catch any escaped cold gas
- Concept based on overhead crane serving experiments along cavern length

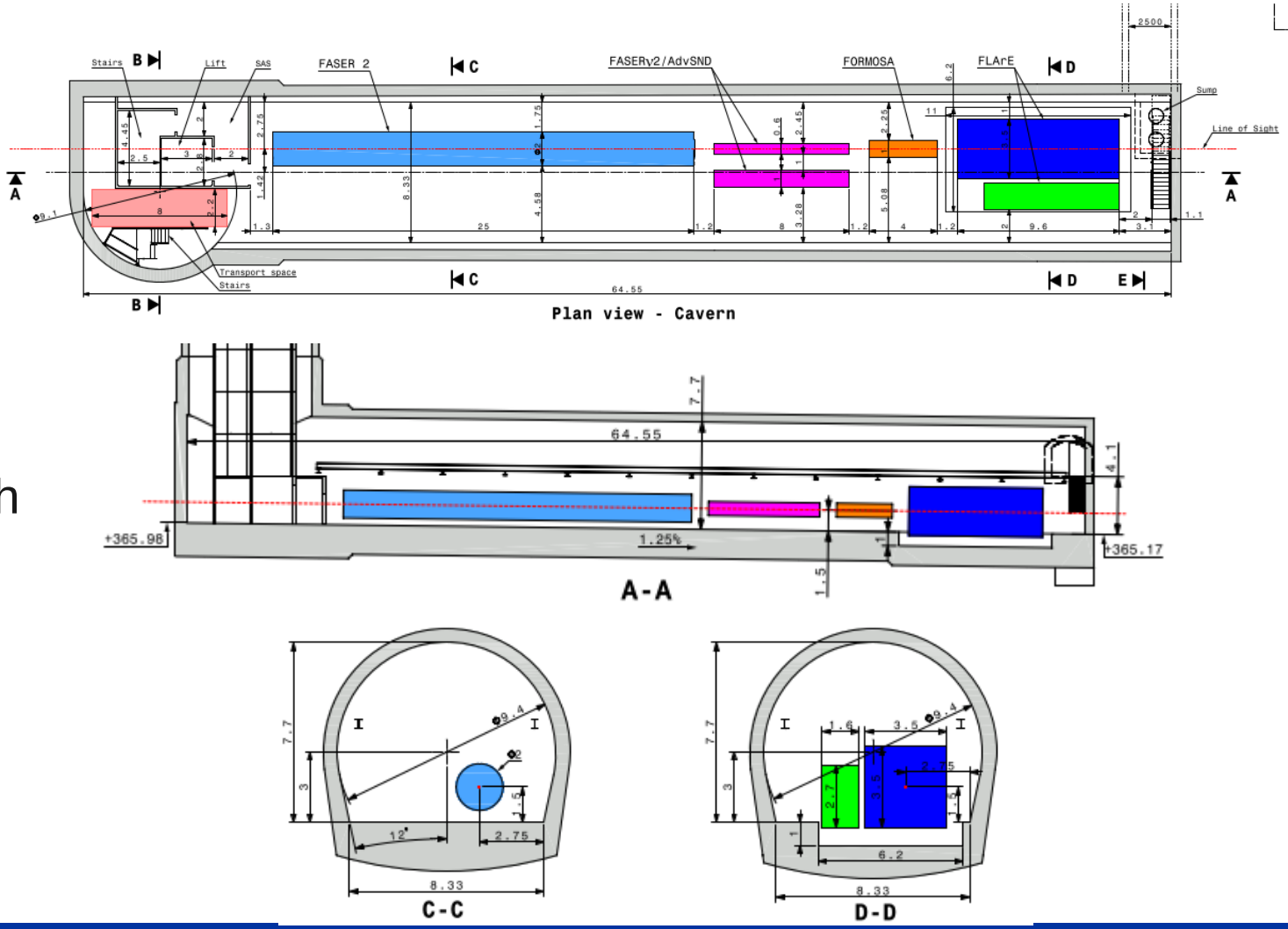

Option 2 – Underground structures

- 88m deep shaft includes lift and stairs for access and space reserved for transport
- Safety gallery connected to the LHC as per Safety requirements
- Ongoing RP study regarding the accessibility of the cavern during LHC operations and feasibility of the connecting gallery (See next talk by A. Infantino)

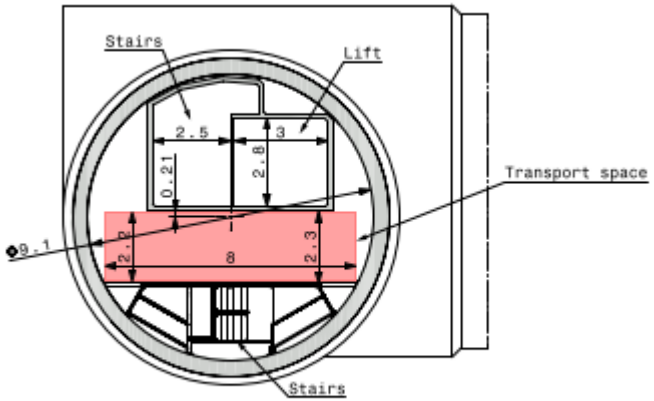

Plan view shaft

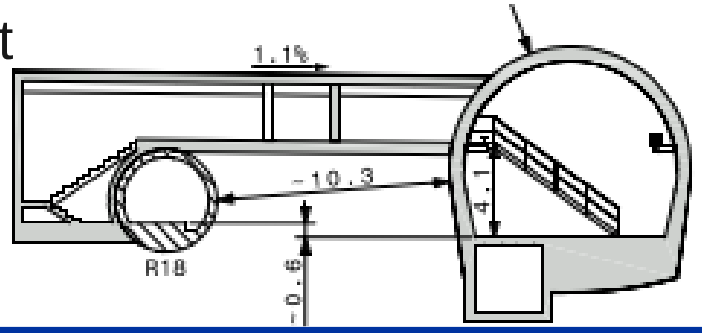

Section through the new cavern and the safety gallery

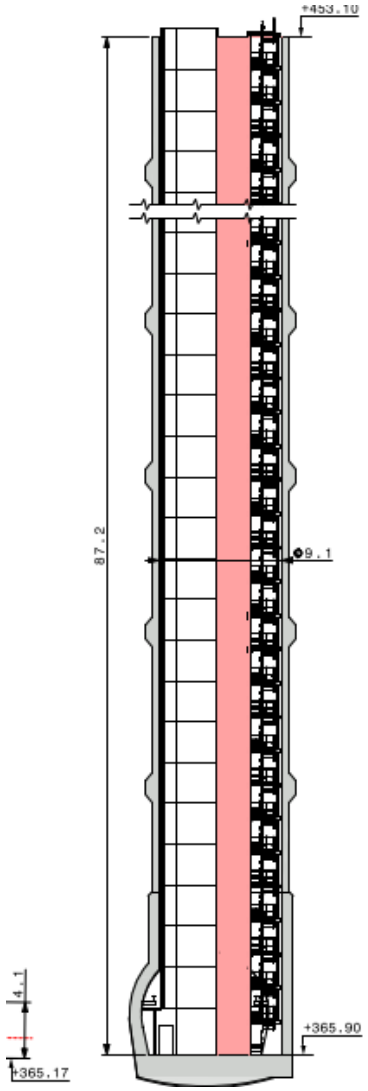

Cross section through the shaft

Option 2 – Surface buildings

Access building

- Similar in size to SD1 and SD17
- Steel portal frame structure with concrete ground bearing floor
- 2.5 m deep false floor surrounding the shaft
- 25t overhead crane to lower the experiments to the floor level of the cavern

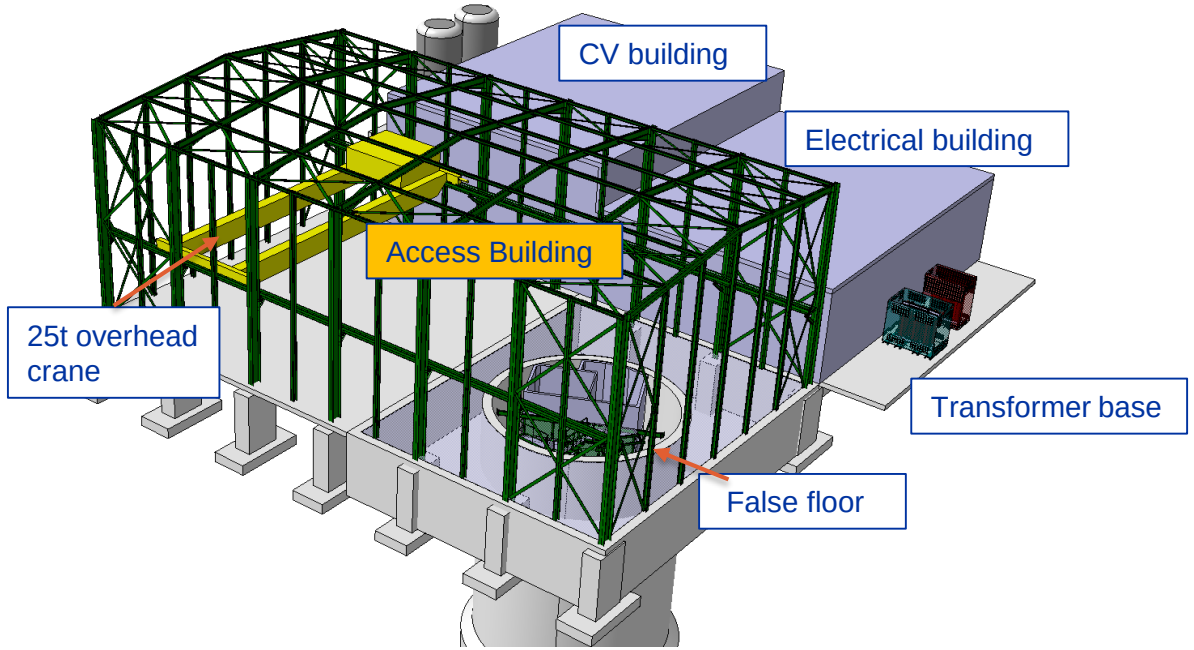

Option 2 – Surface buildings

Service Buildings

- Electrical, cooling and ventilation building adjacent to the access building
- Electrical building designed as a steel frame structure
- Similar size to HL-LHC point 1
- 1.2m deep false floor to allow the services to be distributed into the shaft with a concrete access platform for vehicles to enter the buildings

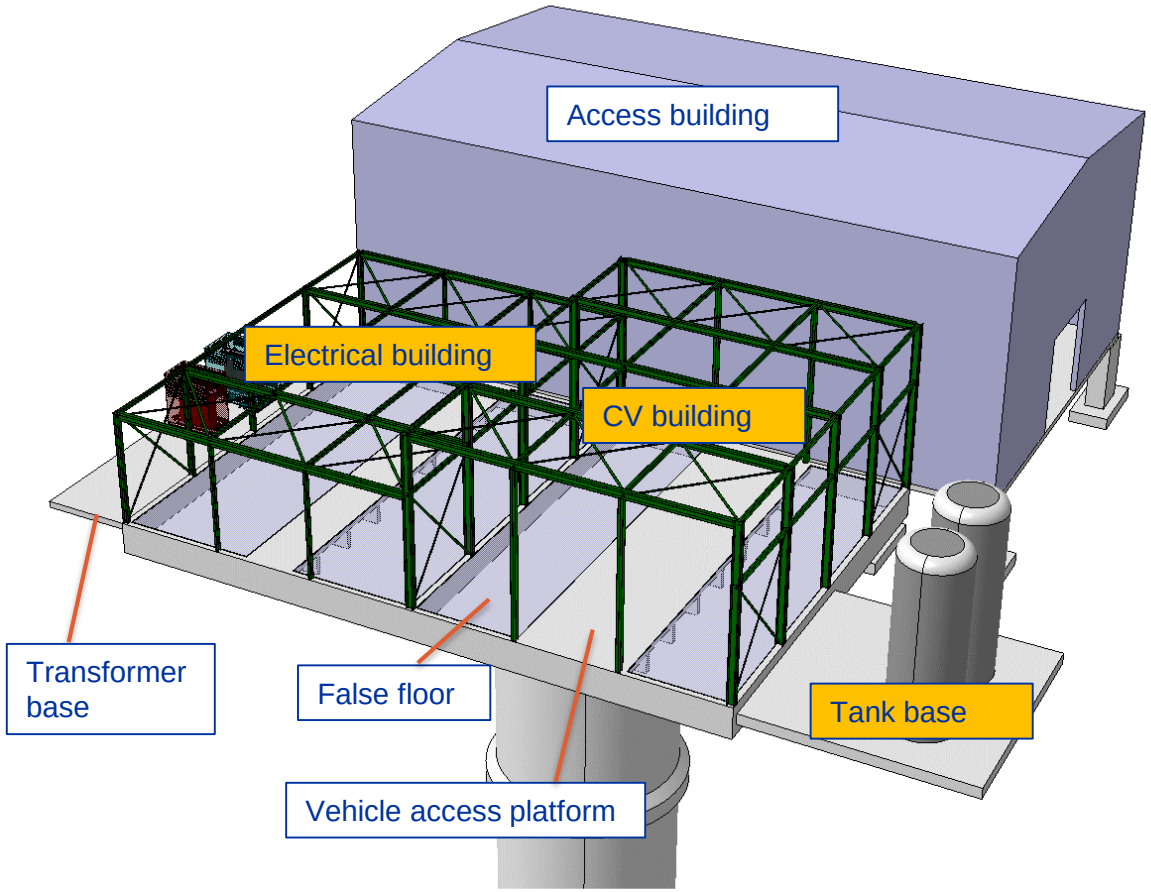

Preliminary Cost Estimate

- **Very preliminary cost estimate prepared for both options**
- **Cost estimate Class 4 – total could be 50% higher and 30% lower than the given estimate**
- **Conclusion: purpose-built facility including the needed services would cost about 40M CHF, whereas the UJ12 option would cost about 15MCHF**

Next Steps

- Conclude the RP study
- Further input from Integration, Transport, CV, Cryogenic, Radiation Protection and Heath and Safety teams
- Include updated requirements from experiments in a more refined design of the facility
- Choose the preferred option
- Progress with cost estimate and schedule

Thank you!

home.cern