Preparation of multi-channel readout for a GaAs pad sensor

Sensors (1)

- provided by RID Tomsk through JINR Dubna

- wedge of 22.5° (360°÷8), 500µm thick
- width of 64mm, subdivided into 12 rings
- 89 pads of ~ 5 x 5mm^2

- selection by leakage currents

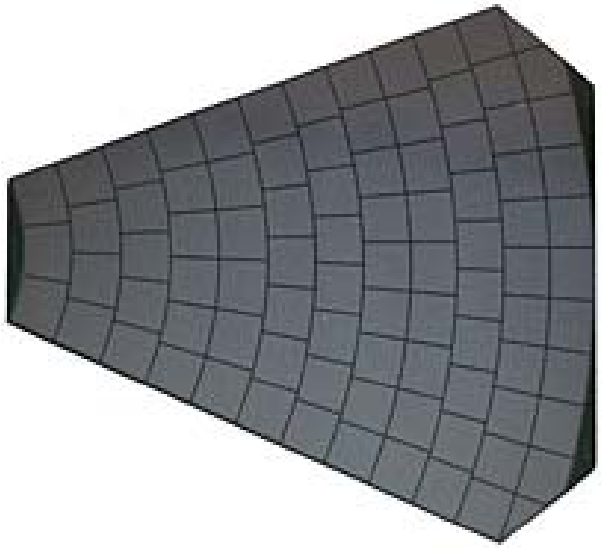

Sensors (2)

- **provided by RID Tomsk through JINR Dubna**

- **wedge of 22.5° (360°÷8), 500µm thick**
- **width of 64mm, subdivided into 12 rings**
- **89 pads of ~ 5 x 5mm²**

- **selection by leakage currents**

- **decide on areas to irradiate:**

  8 channels in ADC
  limited mechanical displacement on support
  different fanout schemes
  ➔ 4 'clusters' of 8 pads each

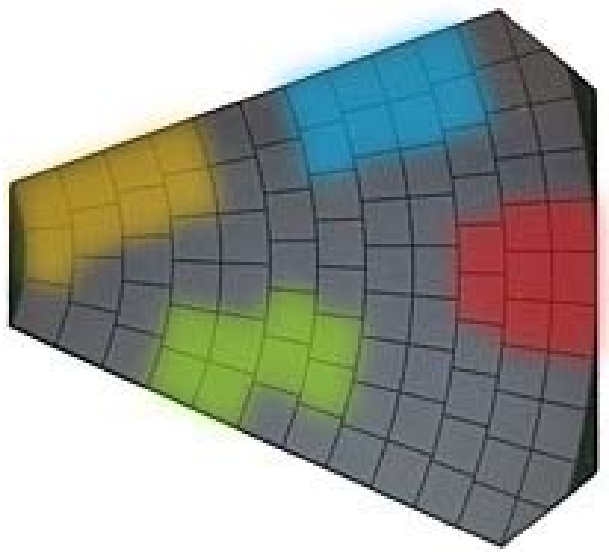

Testbeam facility (1)

- **DESY II Synchrotron, Test Beam 22**
- **Beam spot ~ 8 x 8mm², Gaussian**
  (crosswise scintillator triggers T1 & T2)
- **Silicon Telescope**
  (3x2 x/y strip detector planes, resolution 3µm)
- **DUT mounted to upright x/y table remote controlled**
  (moving range ~ 40 x 40mm², thus covering max. 8 adjacent pads)

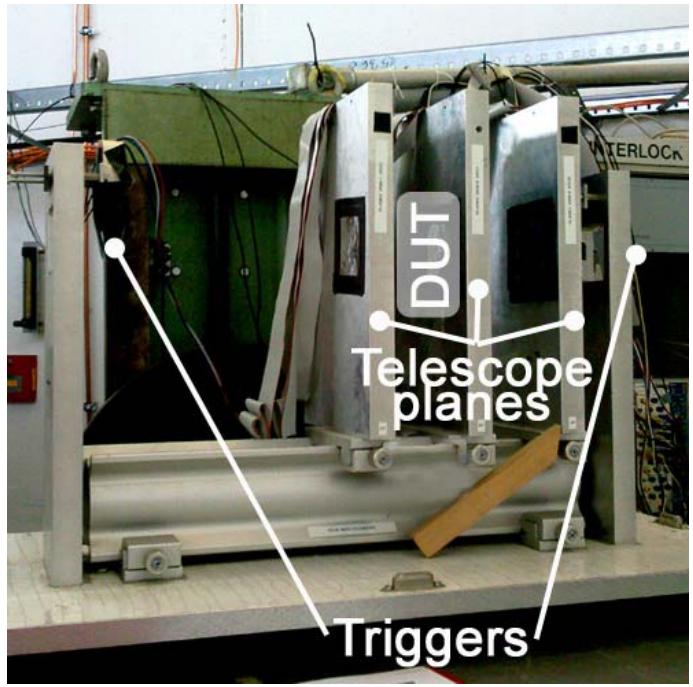

Testbeam facility (2)

- **DESY II Synchrotron, Test Beam 22**
- **Beam spot ~ 8 x 8mm², Gaussian**
  (crosswise scintillator triggers T1 & T2)
- **Silicon Telescope**
  (3x2 x/y strip detector planes, resolution 3µm)
- **DUT mounted to upright x/y table remote controlled**
  (moving range ~ 40 x 40mm², thus covering max. 8 adjacent pads)
- **Details on beam energy, rate & telescope**
  ➔ see succeeding talks

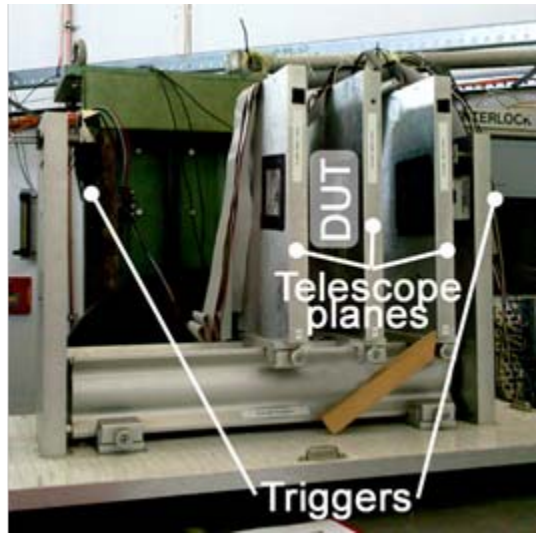

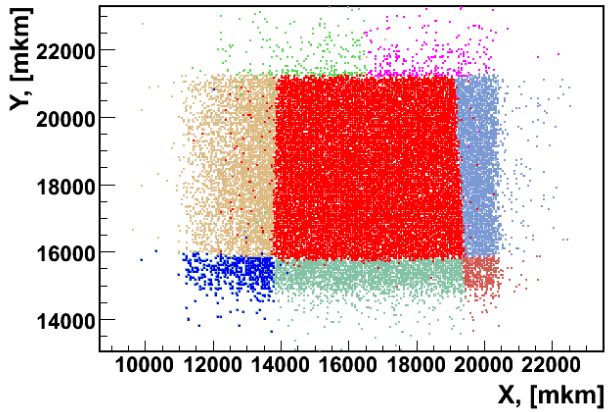

Testbeam facility (3)

Stand-by box **Device under test**
(on x/y table)

Frontend Electronics

- **RO board**

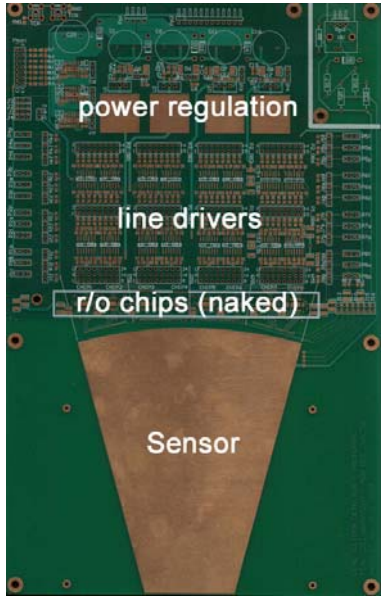

Testbeam 2010

Frontend Electronics

- RO board w/ PreAmp, Drivers

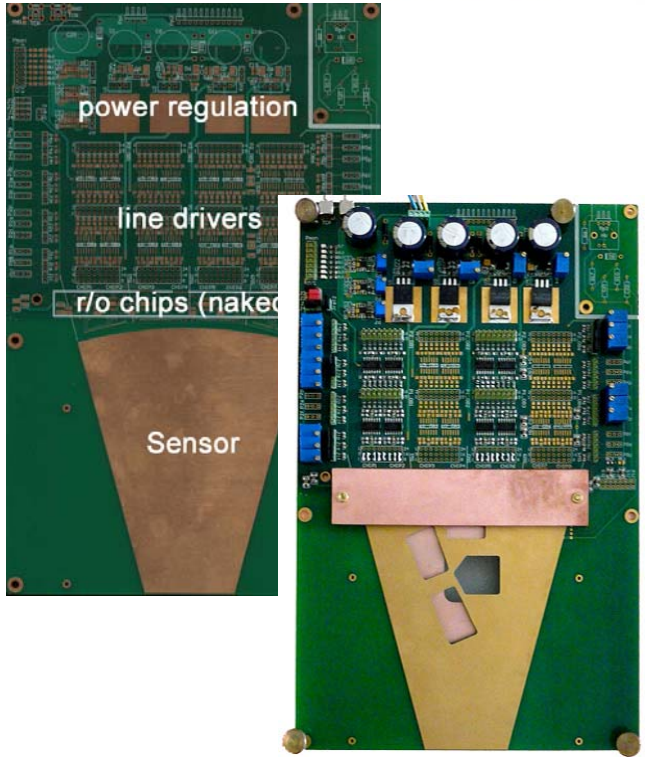

- Power Supplies
- Testpulse coupling
- HV supply & filter

- ADC & DAQ

Frontend Electronics

- RO board w/ PreAmp, Drivers + Sensor

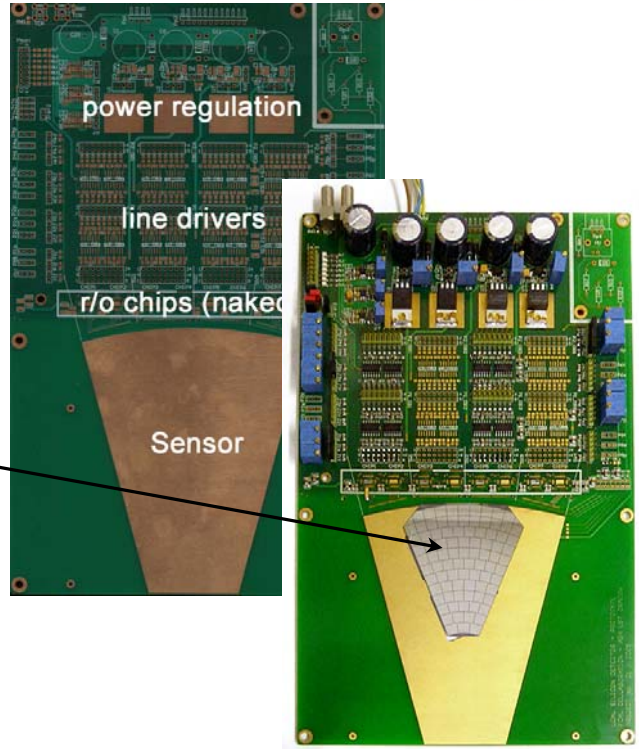

- Power Supplies
- Testpulse coupling
- HV supply & filter

- ADC & DAQ

Testbeam 2010

Frontend Electronics

- RO board w/ PreAmp, Drivers
+ Sensor
+ ‘Fanout’

- Power Supplies
- Testpulse coupling
- HV supply & filter

- Shielding box

- ADC & DAQ

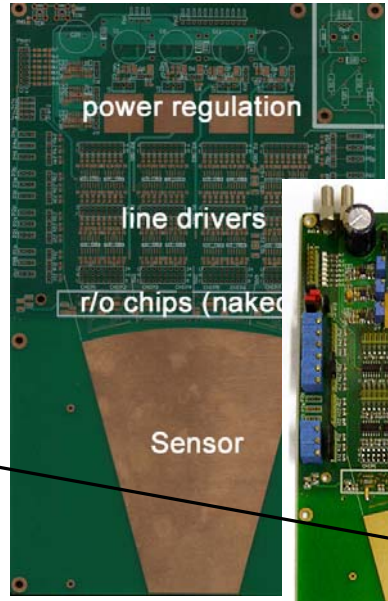

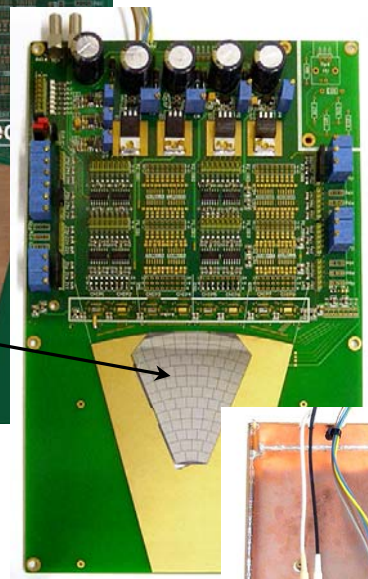

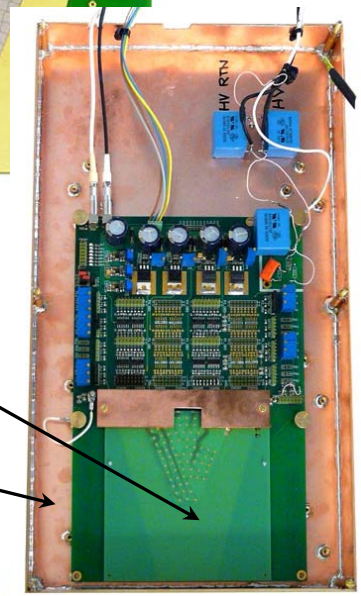

RO Board (1) (courtesy of AGH Krakow)

Preamplifier ASICs:
8x8 channels provided

Line Drivers:
4x8 channels provided

Full Chain (Sensor - ADC):
1x8 channels at a time

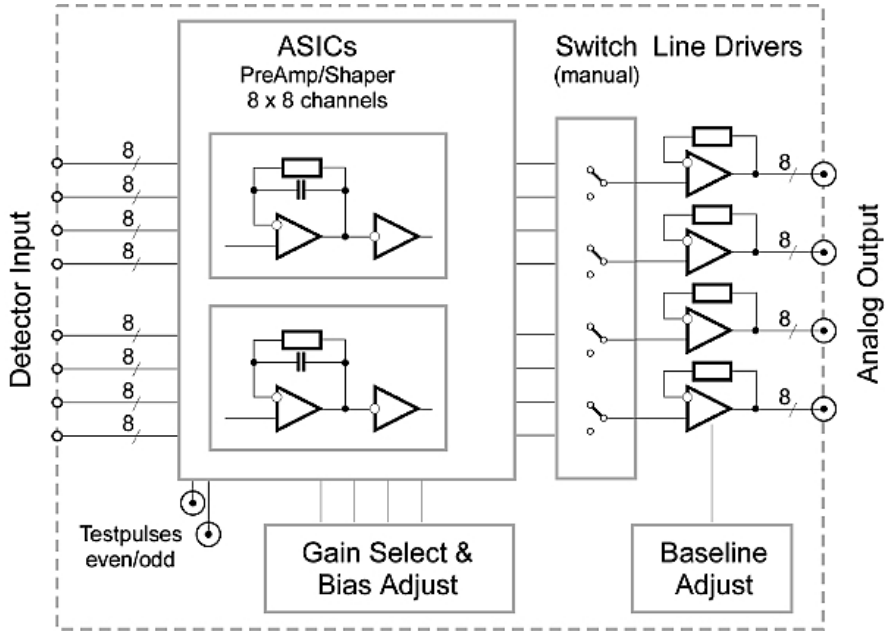

RO Board (2) (courtesy of AGH Krakow)

Preamplifier ASICs:
8x8 channels provided
Zeuthen board: 4x8 equipped

Line Drivers:
4x8 channels provided
Zeuthen board: 2x8 equipped

Full Chain (Sensor - ADC):
1x8 channels at a time
Zeuthen board: 4x8 channels, selectable

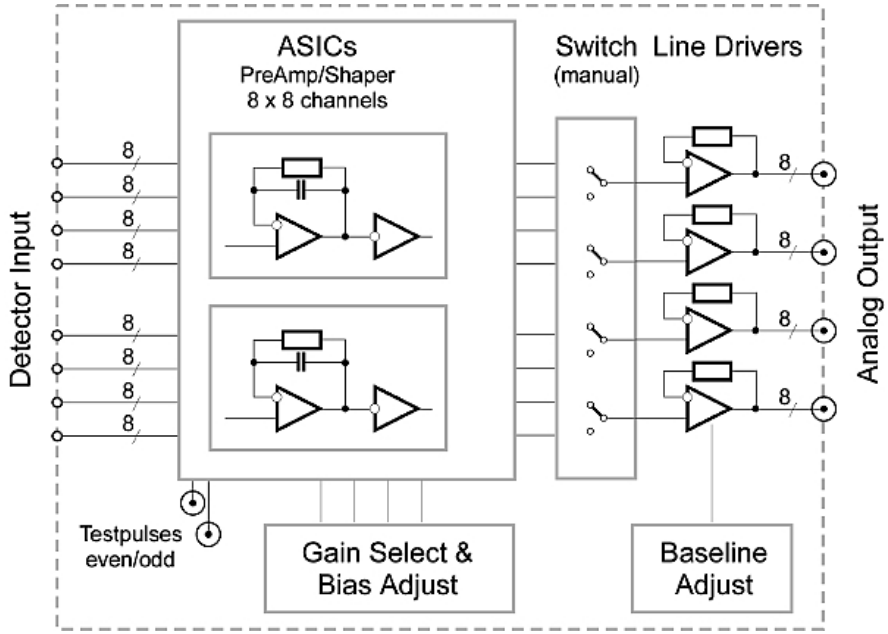

RO Board (3) (courtesy of AGH Krakow)

Preamplifier ASICs:
8x8 channels provided
Zeuthen board: 4x8 equipped,

Line Drivers:
4x8 channels provided
Zeuthen board: 2x8 equipped

Full Chain (Sensor - ADC):
1x8 channels at a time
Zeuthen board: 4x8 channels, selectable

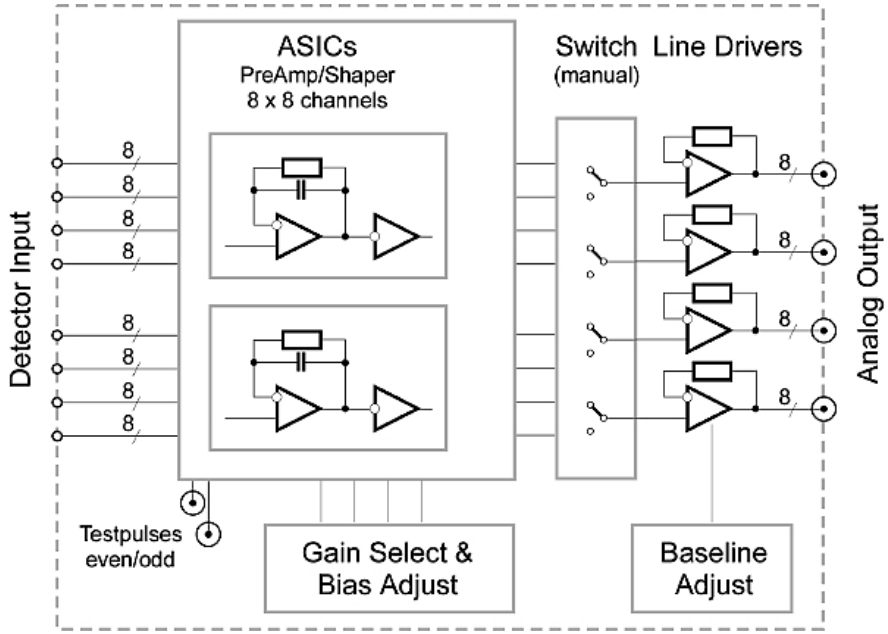

Testbeam: only 3 preamp chains working; all bonds of cluster #1 ruptured

Fanout (1)

- **conventional contacting: wire bonds**
- **flexible prototype: drawbacks**
- **GaAs version: 500µm pcb**

- **mount onto RO board, removable**
- **bonding**
  - to sensor
    - (through 1.6mm ø holes)
  - to pcb

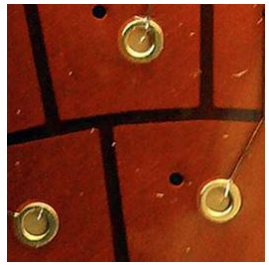

- **mechanical protection for bonds mandatory!**

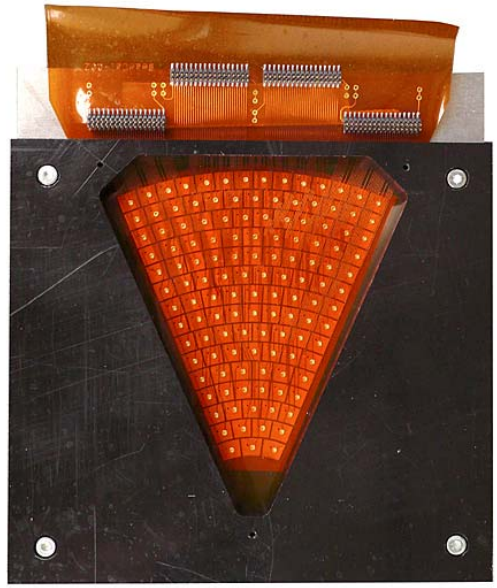

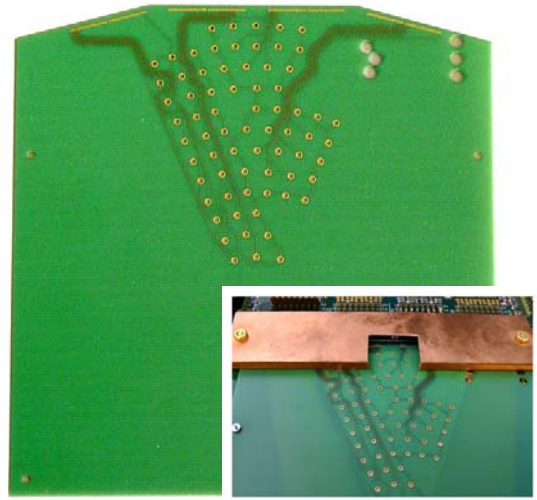

Fanout (2)

- **routing of tracks:**

a) one chip - one cluster or distributed*)

b) consecutive rings & sectors or alternating

- **grounding neighbours?**

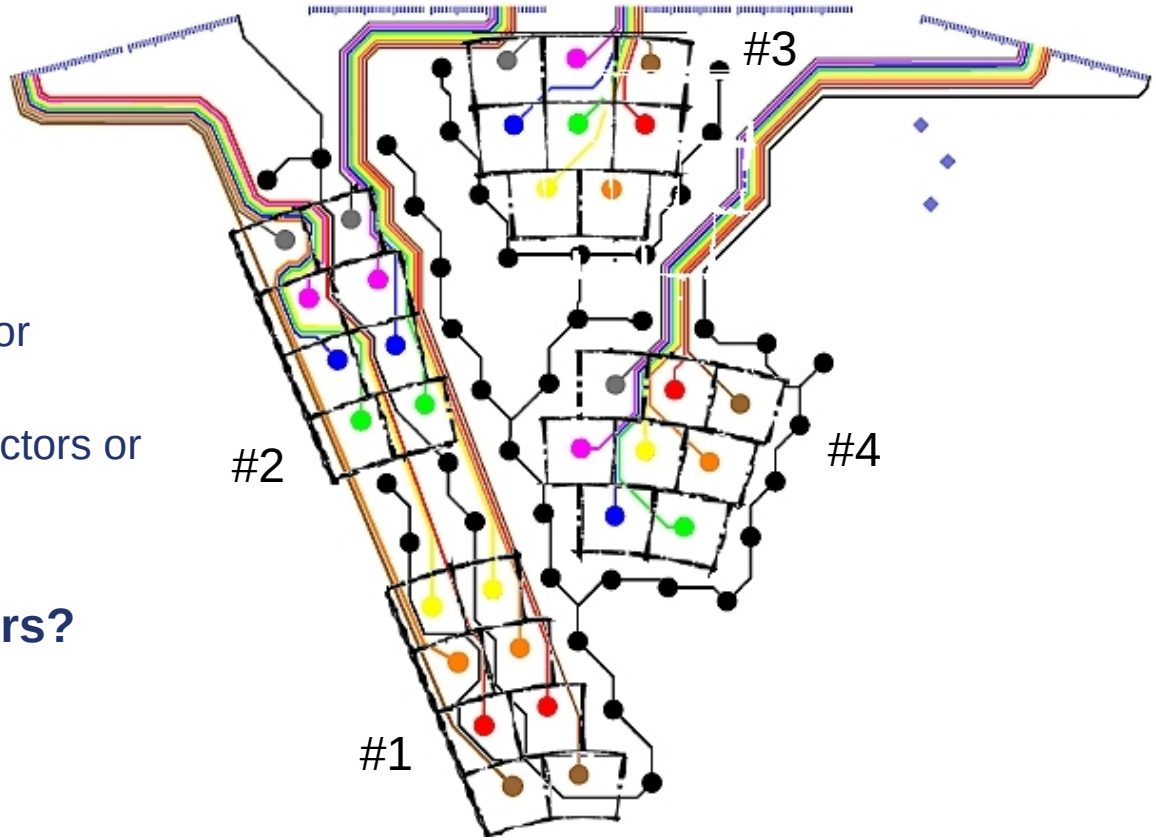

*) ➔ requires special wiring of the RO board

Fanout (3)

Test results

- measurement of parasitic capacitances
- measurement of crosstalk
  - ➔ *to be consolidated*

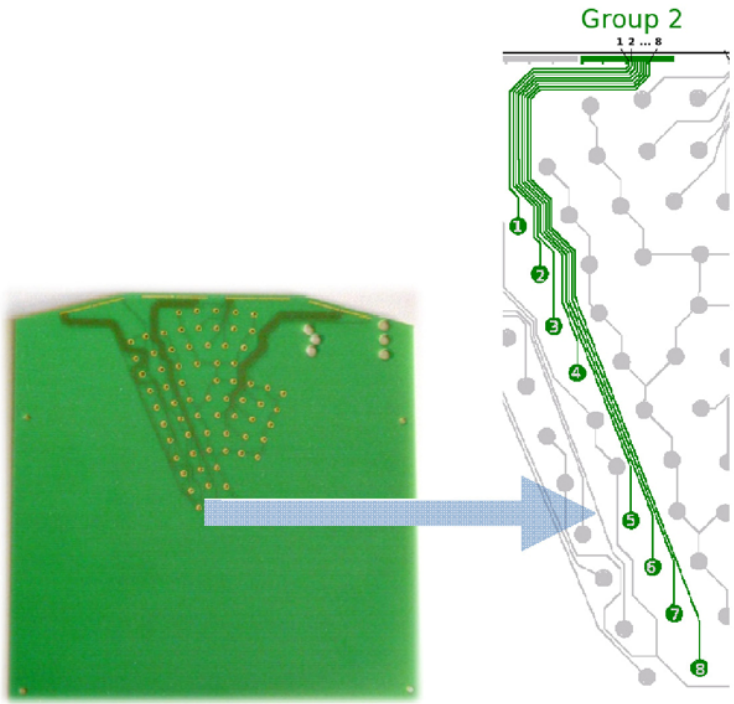

Channel 6 (cluster 2)	vs. Chan 5	vs. Chan 5+7	vs. Chan 5+7+8	vs. all others
Measured	1.60pF	3.29pF	3.64pF	3.98pF
Calculated		3.30pF	3.43pF	

Testpulse

- **provided on the RO board:**
  even channels - odd channels
  fine for functional and linearity test

- **for crosstalk measurement:**
  most channels get crosstalk from **both** neighbours!
  ➔ inject charge through a dedicated capacitor!

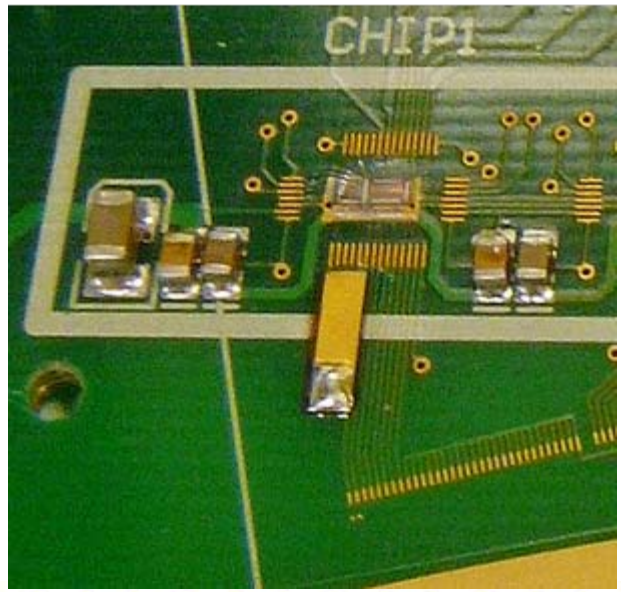

Summary

A GaAs pad sensor has been connected to a multi channel RO board with new preamplifier ASICs and successfully tested in a particle beam.

Data are still under investigation - how the signal charge and crosstalk depend on different fanout schemes could not reliably be identified so far.

Many thanks to Szymon & Marek for providing the RO board and to Sandro for assisting in the functionality tests.