Beampipe and Integration Issues

ITS upgrade Meeting, October 4th 2010

W. Riegler

Original Plan:

New beampipe with smaller diameter for the 2018 shutdown.
No new beampipe for the 2014/2015 shutdown.

With the new schedule which foresees long 2016 and 2020 shutdowns:

We want to put (at least one) additional silicon layer closer to the IP for improved impact parameter resolution.

The timeline for a new and smaller beampipe in 2016 is

Jan. 2012: Decision on the beampipe diameter
Jan. 2013: Order of the beampipe
Jan. 2015: Delivery of the beampipe to CERN
Jan. 2016: Installation in ALICE

ALICE Vacuum System

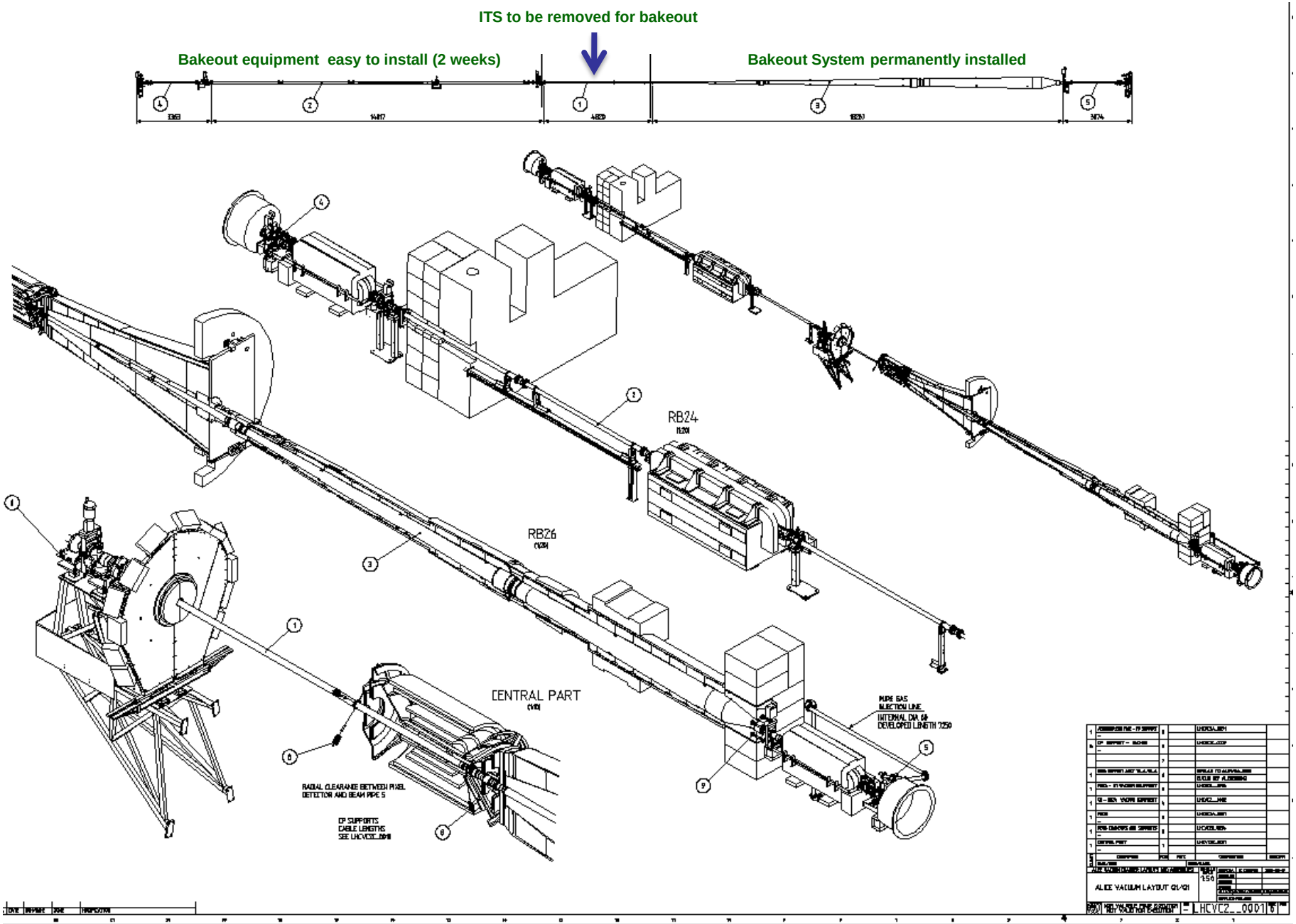

Central Beampipe

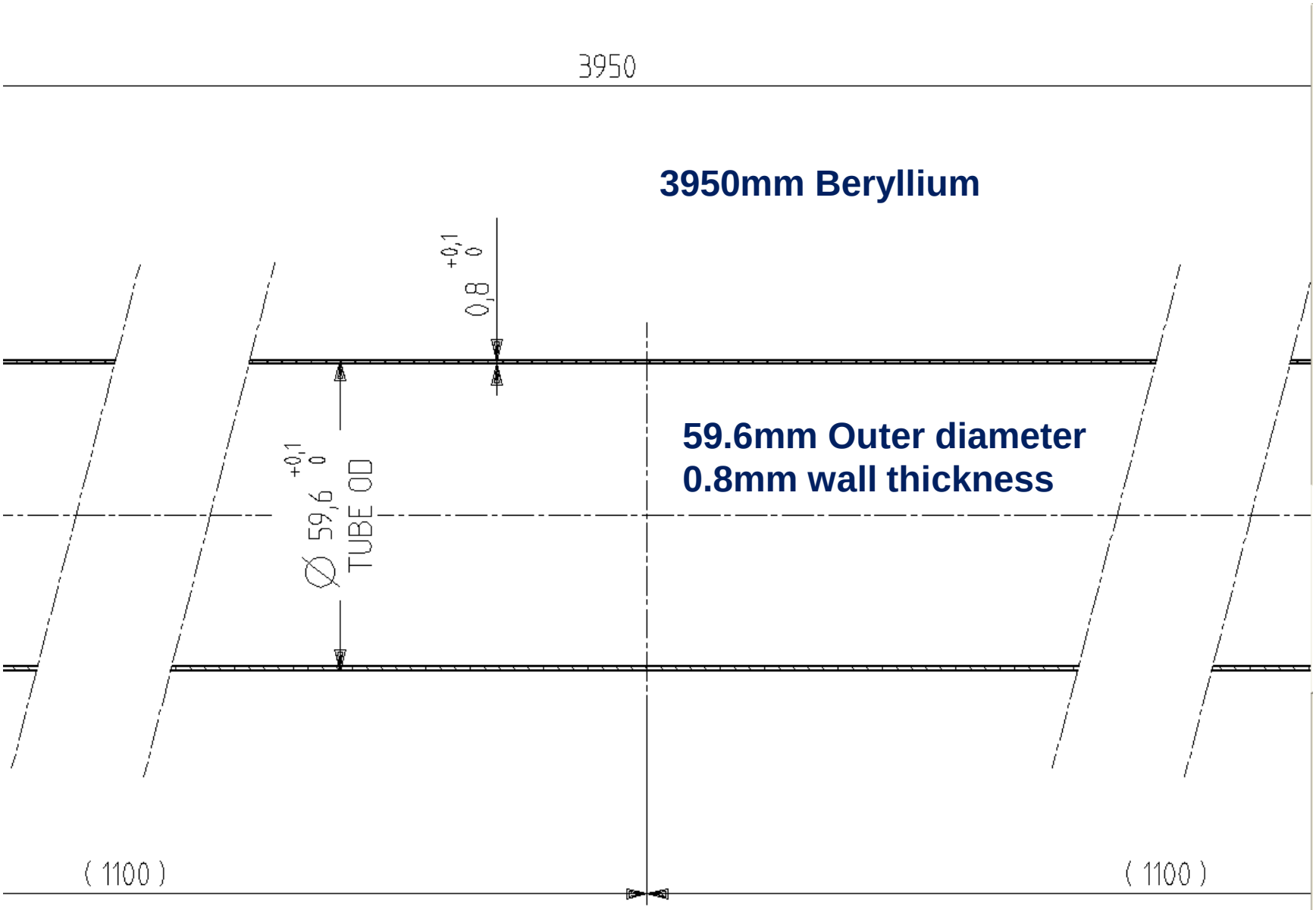

Central Beryllium Beampipe

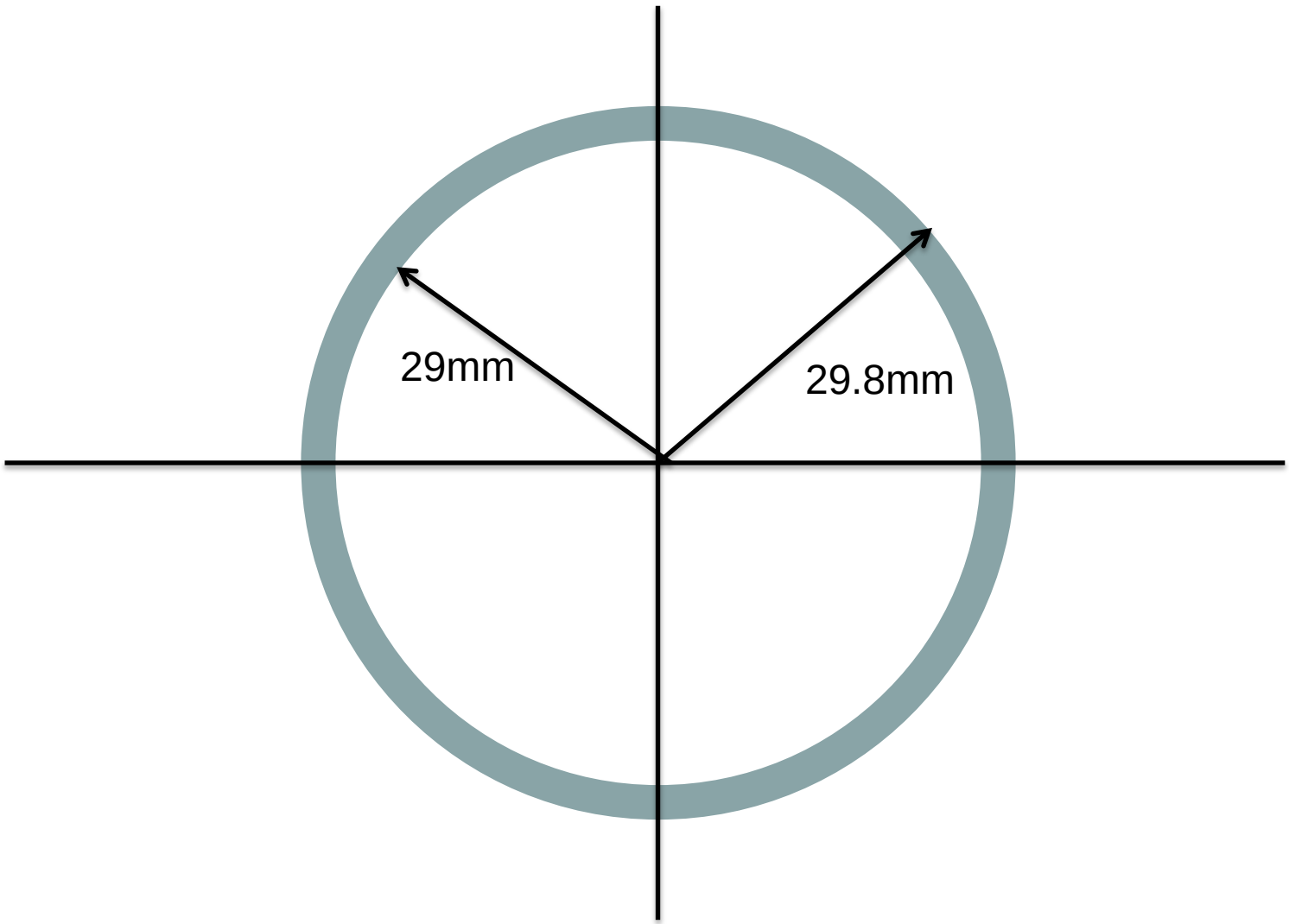

What determined the current inner radius of 29mm?

Massimo Giovanozzi, beampipe working group meeting 16. 9. 2010:

1) **Aperture design value n1=7**
2) **Beta beating 20%**
3) **Closed orbit tolerance 4mm at injection**
4) **Radial Alignment Tolerance 15mm**

1+2: This is related to the actual beam size – which amounts to approximately 10 sigma of the beam. Assuming an injected beam with a sigma of 1mm would result in a beam radius of about 10mm.

3: Is the tolerance on the orbit position

4: Includes all the mechanical effects of beampipe alignment (mechanical tolerances of the pipe, absolute positioning in space, movements with magnetic fields etc.)

1+2+3 were verified to be definitely within these tolerances.

What determined the current ID of 29mm?

Naively:
If the beampipe would have perfect geometry (which it has) and if we can put the pipe exactly in the nominal place, we can have a pipe with 14mm inner radius.

→Originally people were very conservative because one feared large movements of the cavern floor (new caverns, ATLAS, CMS) and one was worried about large movement of the experimental apparatus in the magnetic field. That's why the 15mm tolerance was put.

Already before the start of LHC it was accepted by the machine that the margin can be reduced and the beampipe design for the ATLAS and CMS B-layer upgrade – originally meant for 2014/2015 – has diameter of 50mm.

This number depends a lot on how much the machine trusts in the alignment of our beampipe. Where is the ALICE beampipe with respect to nominal ?

Material distribution from Gamma Conversions

Ana Marin, Gamma Conversion Group

All pass2 data, September 2010
SPD well visible, beampipe invisible,
Beam Spot is at around 2mm upwards in the ALICE offline coordinate system (defined by the ITS)

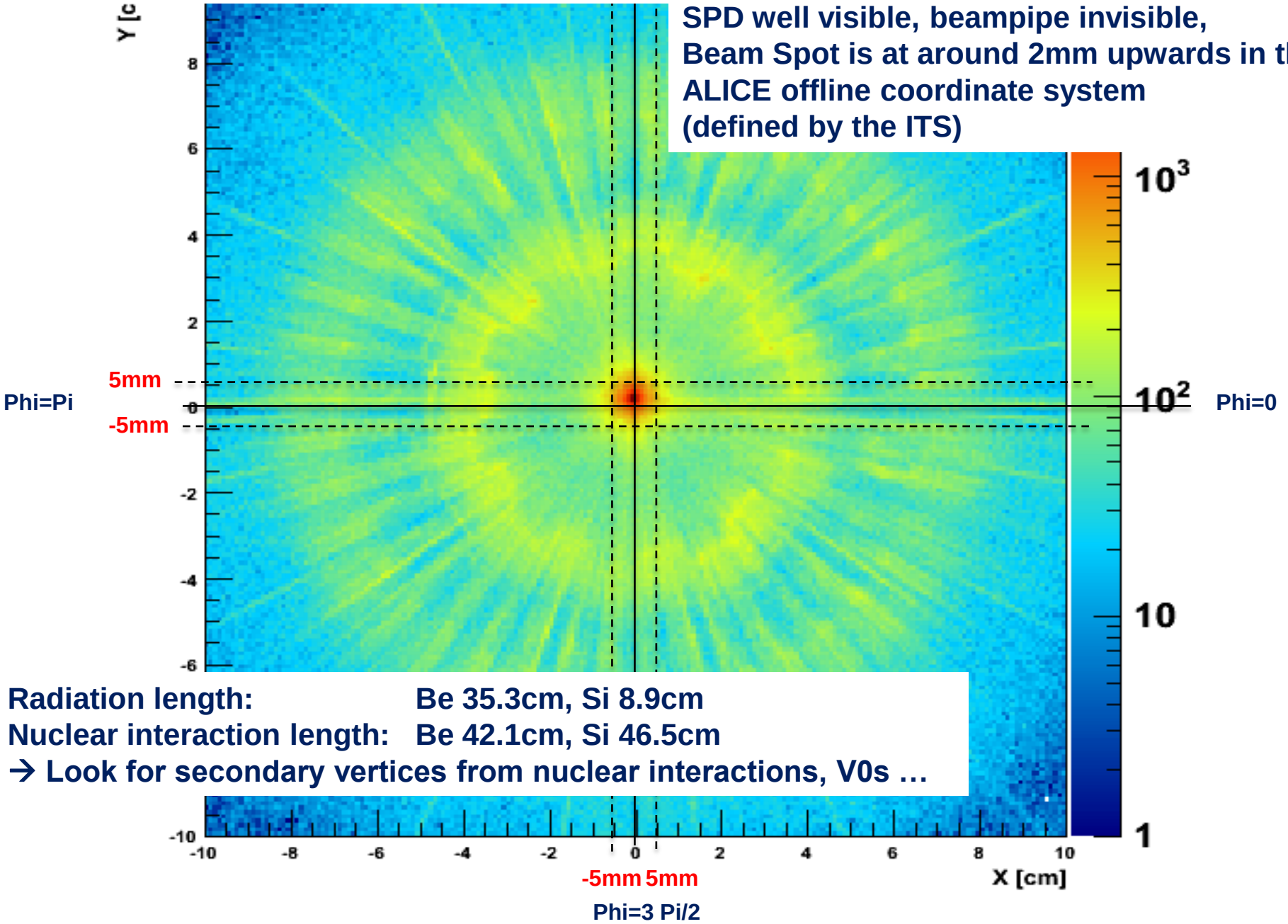

Radiation length: Be 35.3cm, Si 8.9cm
Nuclear interaction length: Be 42.1cm, Si 46.5cm
→ Look for secondary vertices from nuclear interactions, V0s …

Secondary Vertices, Hadron Interactions
Jouri Belikov, Sep. 2010

Beampipe is visible !

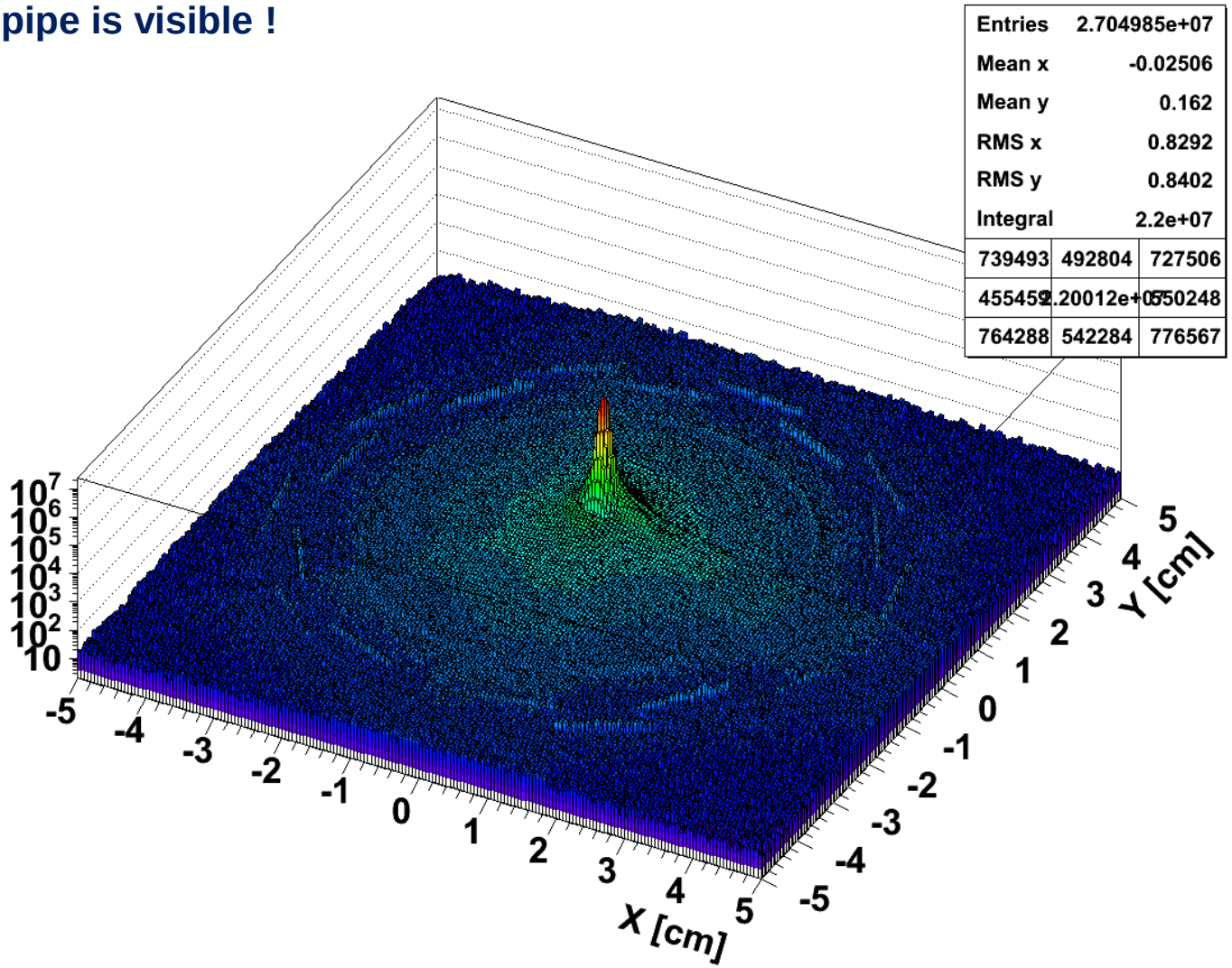

Stefan Rossegger- analyzing Jouri's data Sep. 2010

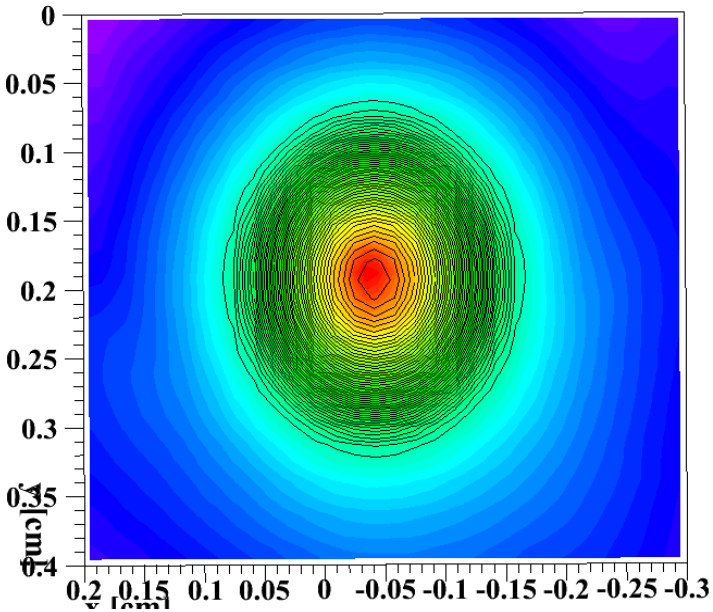

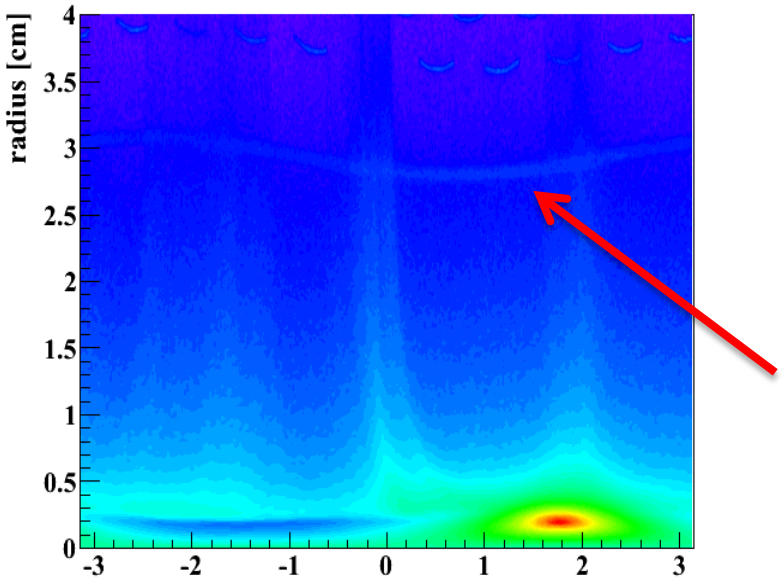

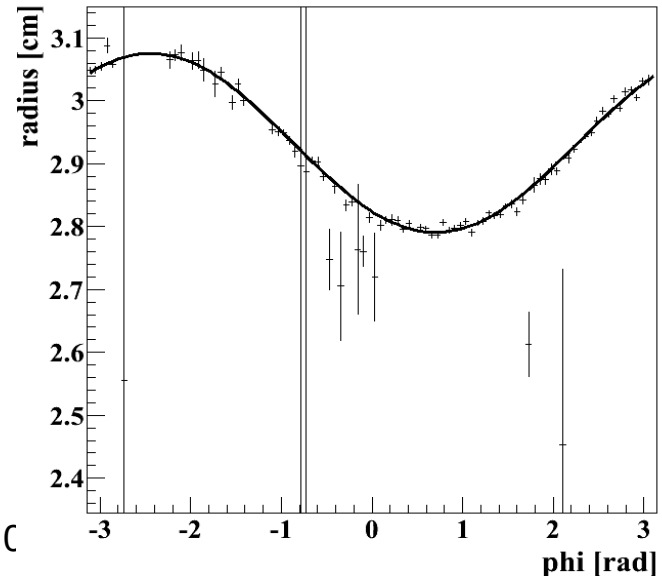

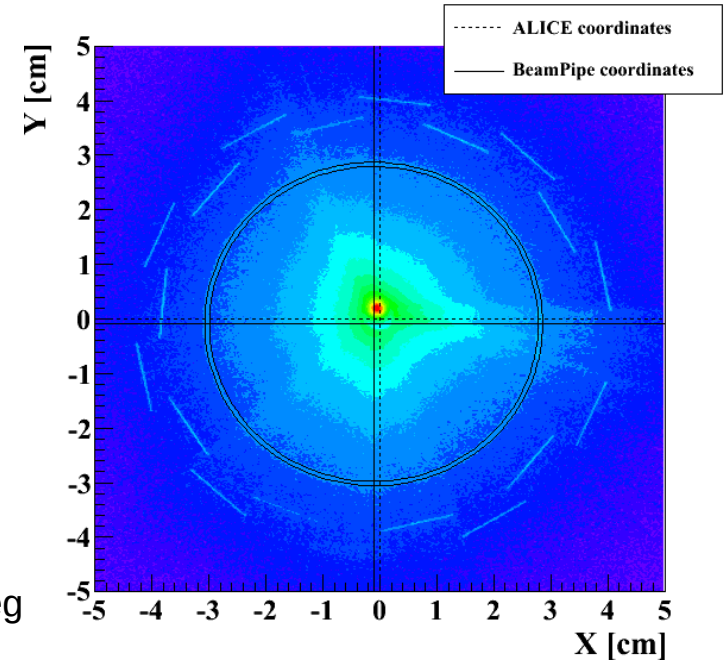

In ALICE Offline Coordinates:

Beam Spot: (x, y) = (-0.4mm,1.9mm)

Beampipe Center (x, y) = (-1.1mm, -0.9mm)

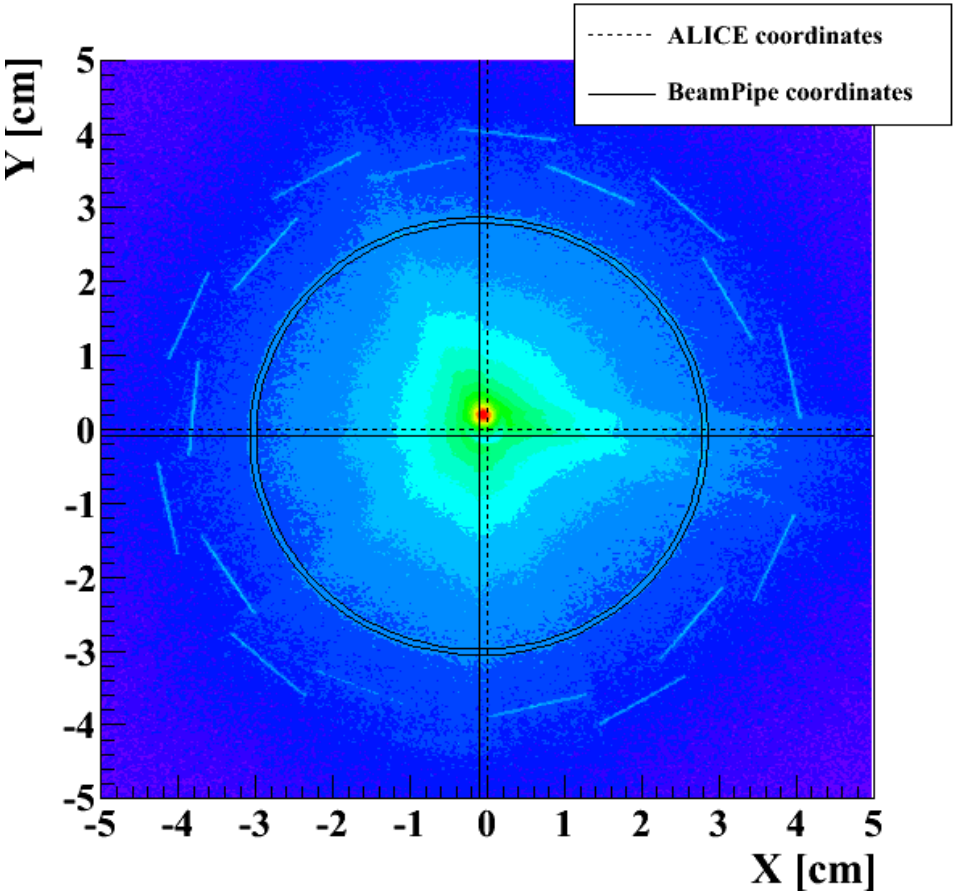

Beam Spot compares well with vertex positions calculated by D. Caffarri

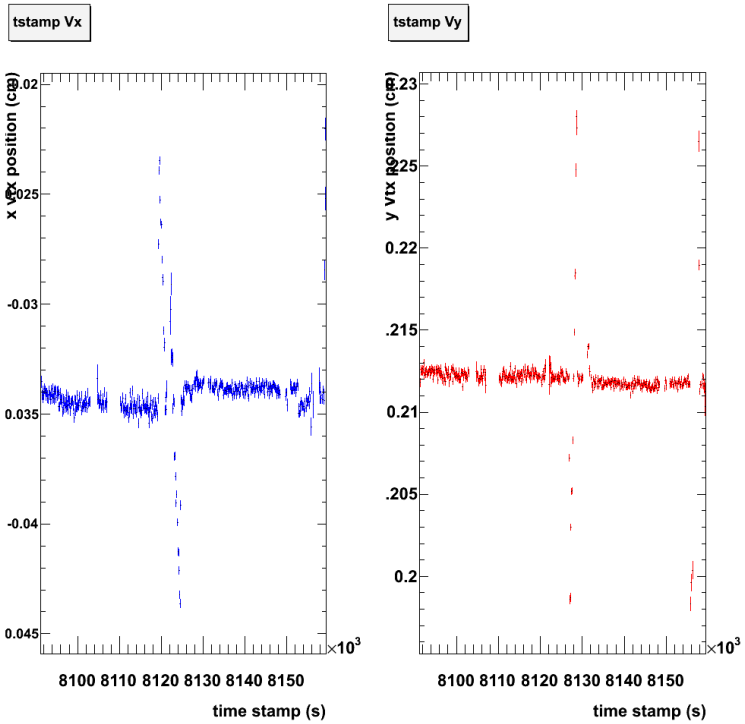

How does this compare to the known position in the cavern

Beampipe Position

What do we know from survey about the beampipe position in the cavern coordinate system – which is equal to the ALICE offline coordinate system in the ideal case ?

We are monitoring the C-side beampipe position (Frontabsorber side) with the BCAM alignment system with respect to the Frontabsorber. System is integrate in DCS and currently in the hands of Mateusz Lechman.

Beampipe Movement since Sept 27 2007

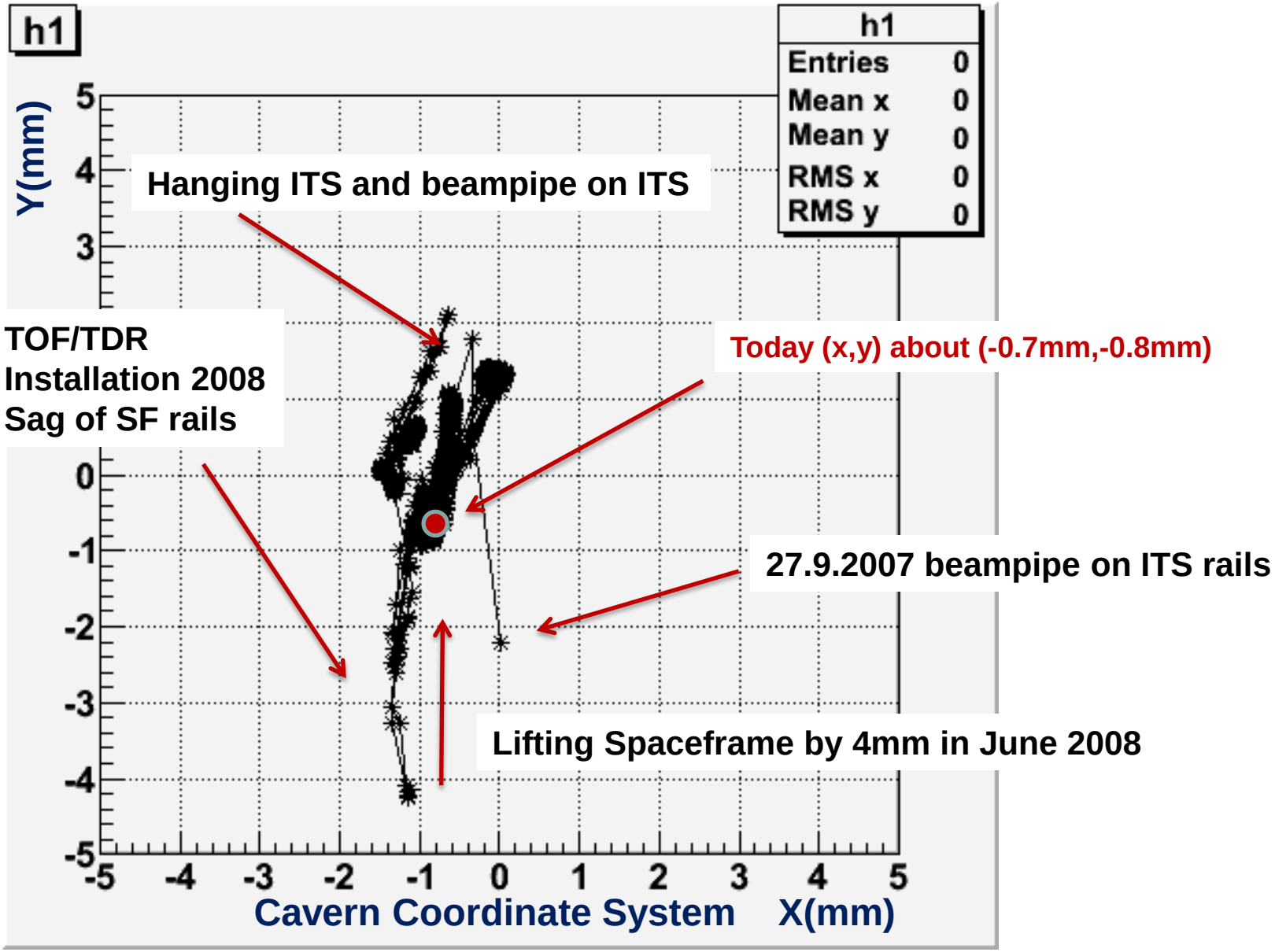

Beampipe Position

The C-side of the beampipe is at (x,y) = (-0.7mm, -0.8mm) = (r=1.1mm) in the cavern coordinate system. This side is 900mm from the IP.

The beampipe center is at (x, y) = (-1.1mm, -0.9mm) = (r=1.4mm) in the ALICE offline coordinate system.

→ This would mean that the cavern coordinate system and the offline coordinate system coincide by <1mm !!

The last survey of the A-side beampipe flange, which is visible from the A-side if the PMD is in parking position, was (x,y) = (-2.1,-2.4mm) = (r=3.2mm).

This means that today, the entire central beampipe is within 3.5mm of the nominal position.

This is a very good result, considering the complex installation procedure and the fact that we realigned the beampipe after TOF/TRD installation by moving the entire ALICE experiment (Spaceframe).

Beampipe Diameter

We can argue that:

The ALICE beampipe does not move when we turn ON and OFF magnetic fields. (The frontabsorber moves, but that's not the central pipe and it is a different story that we will fix in 2016 – 2012 is not possible).

The ALICE cavern is there since 25 years and the cavern floor doesn't move any more (currently finding out proofs for that).

We are able to align the beampipe at any moment. Takes 2 days (+ Neon refill and pumping).

We could aim for arguing that we can guarantee a radial displacement of <3mm, which together with safety margins and fabrication tolerances should guarantee a radial aperture limitation of <4mm, which would give a beampipe inner radius of 18mm, i.e. 36mm Inner diameter.

→All this just from alignment tolerances.

Beampipe Diameter

There are many more ingredients in this story:

ATLAS is in principle interested in a beampipe smaller that 50mm, but they want it already in 2012 – not for installation but as a spare, because they will do heavy modifications to the current beampipe in 2012.

CMS is interested in a smaller beampipe, but they could profit only down to 46-48mm because from then on they are constrained by their Pixel geometry. They will not really push for much more – they will probably stay rather conservative because they seem a bit worried about alignment.

For the current beampipe there is a common ALICE/CMS/ATLAS spare. If we diverge on the beampipe requirement we will not have a common spare.

Clearly it will be more difficult to push for a very small diameter if the other experiments don't. Still – there is no fundamental reason we shouldn't be different.

Beampipe Diameter

Clearly there are other decisive parameters, just one example I picked up:

Some gases are not 'pumped' by the NEG coating – like N2 and CH4. These have to be taken away by 'pumping'. This pumping speed is determined by the gas flow conduction of the tube – a smaller tube having a smaller conduction. But there is a conductance limit – where it doesn't matter how much you pump – you never get the gas out.

The danger is an ion induced desorption instability – which means that gas is ionized by the beam – gets 'accelerated' (a bit more than thermal) by the fields from the particles – they hit the walls and desorb molecules – which are ionized again – giving a runaway effect.

That's also called the ISR bump instability because it was observed at ISR the first time and it is a hard limit. This is of course a strong function of the beam intensity.

Etc. etc.

Installation Procedure

Installing a large collider detector one usually starts with the heavy parts – calorimeters, large tracking detectors – and in the end one installs Pixels and Beampipe.

ALICE first installed the beampipe and then placed the TPC, ITS, TOF TRD and finally the EMCAL around it.

The issue of late installation of TRD, TOF and EMCAL is historic, the sequence of ITS,TPC and beampipe however is an intrinsic necessity of ALICE.

The reason is that the muon system and the frontabsorber are closing the experiment on one side, while in e.g. ATLAS and CMS both endcaps can be opened.

If we would arrive with the Pixels+Beampipe in the end we have no more access to connect the central beampipe to the frontabsorber beampipe – that's why the beampipe must come first and then we shift TPC, ITS, SPD over it → L. Simonetti/Torino installation procedure and tooling. This environment will stay with us in the future.

More Decisions for Jan. 2012

The geometry of the proposed Forward Calorimeter will determine the final length of the beampipe an the position of the central valve.

In case we want some 'very forward' detectors with conical beampipe on the A-side we have to look into a different compensator magnet with much larger aperture which changes the A-side interface to the central beampipe and the related support structures.

→It is very important to have an integral view of the 2016 upgrade plans at the end of next year (end 2011).

Summary

The current beampipe radius of 29mm contains 15mm tolerance on fabrication and alignment errors.

Currently our central beampipe is within 1.5mm of the nominal position on the C-side (= part inside the ITS) and with within 3.5mm of the nominal position on the A-side.

By convincing the machine that we can align the beampipe very well we might be able to gain a lot from this margin and hopefully be able to obtain a beampipe diameter of <=40mm.