Status of the MATHUSLA, CODEX-*b* and ANUBIS experiments

Louis Henry
LHCP, Taipei, 17/05/2022

Introduction

- Searches for LLPs at LHC main experiments suffer from several limitations.
  - Plain geometry: furthest stations are ~15m from the IP.
  - Trigger, reconstruction, originally designed mainly around prompt signatures.

- Concerning triggers and reconstruction, huge effort by experiments to improve the situation → exciting new possibilities in the near future.
  - But still limited by bandwidth and backgrounds.

- Dedicated experiments can, for a rather cheap price, achieve background-free conditions and look for particles flying few tens of meters → complementary!
  - Also complementarity between transverse and forward detectors.

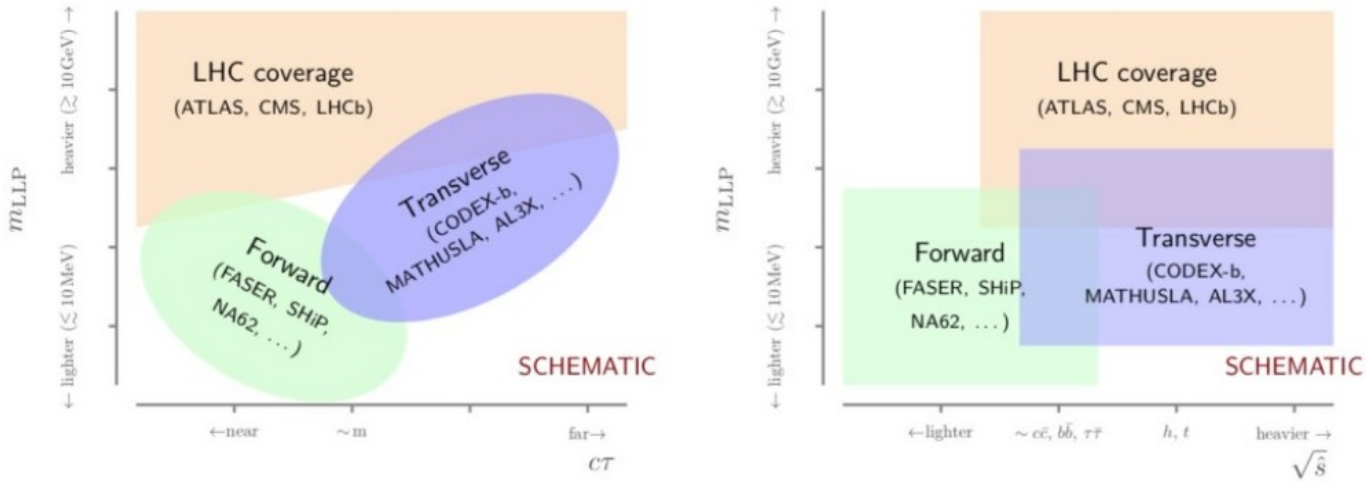

Search for LLP in transverse regions

- LLPs are well theoretically motivated, and already appear in the SM.
- There is a vast region of lifetime which is difficult to access for experiments and physics probes → well motivated experimentally.

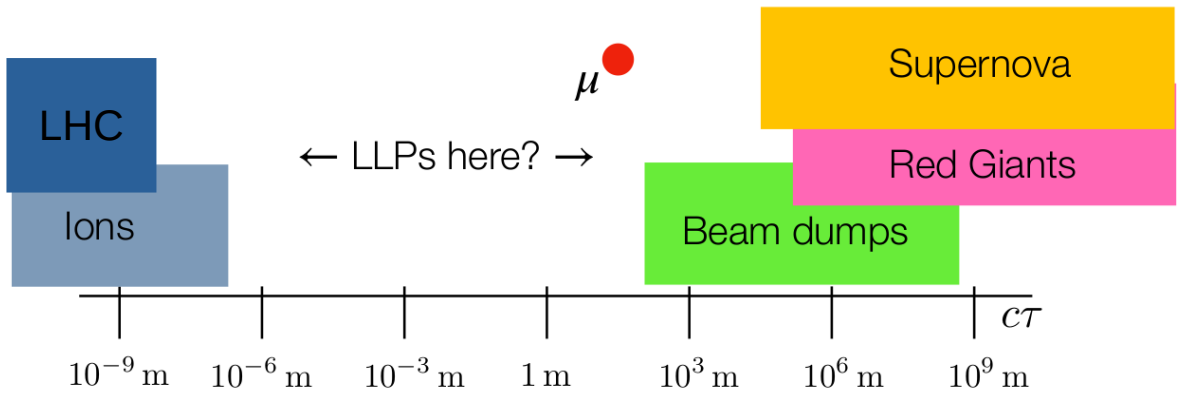

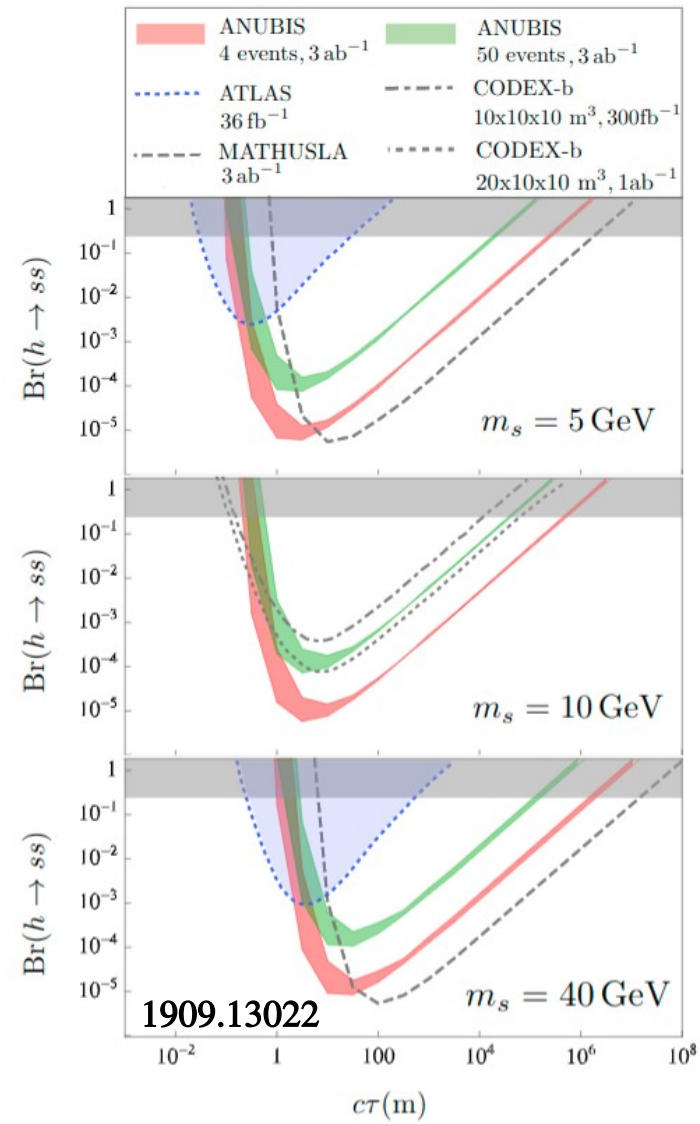

- LHC: very intense source of potentially heavy mediators that would then decay in the transverse direction
  - prime opportunity to extend the reach of searches with a few strategically placed trackers.

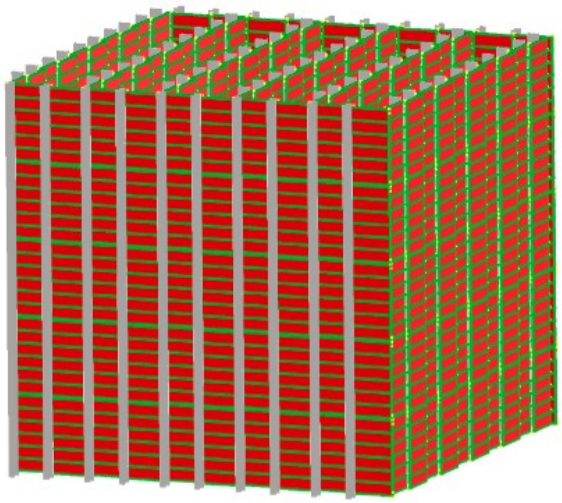

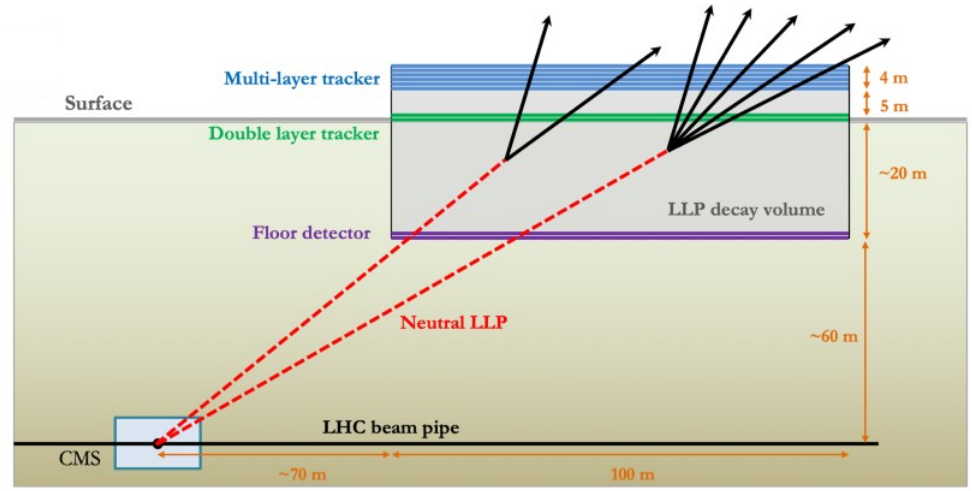
Multi-layer tracker
Surface
Double layer tracker
Floor detector
LLP decay volume
Neutral LLP
LHC beam pipe
CMS
4 m
5 m
~20 m
~60 m
~70 m
100 m

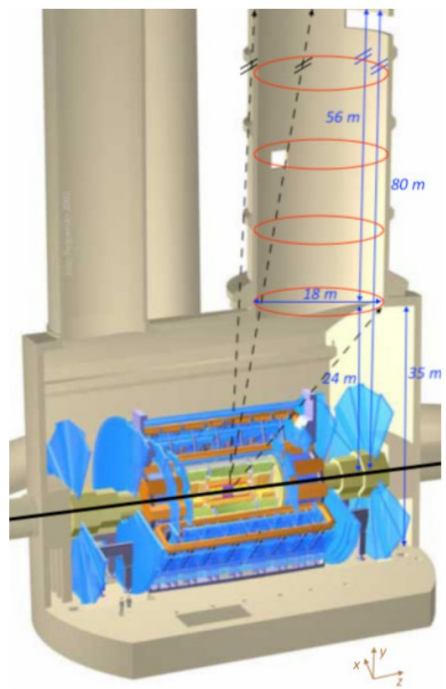
56 m
80 m
18 m
24 m
35 m

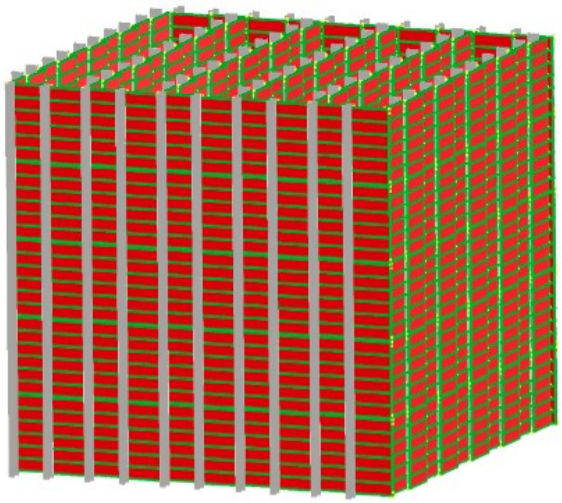

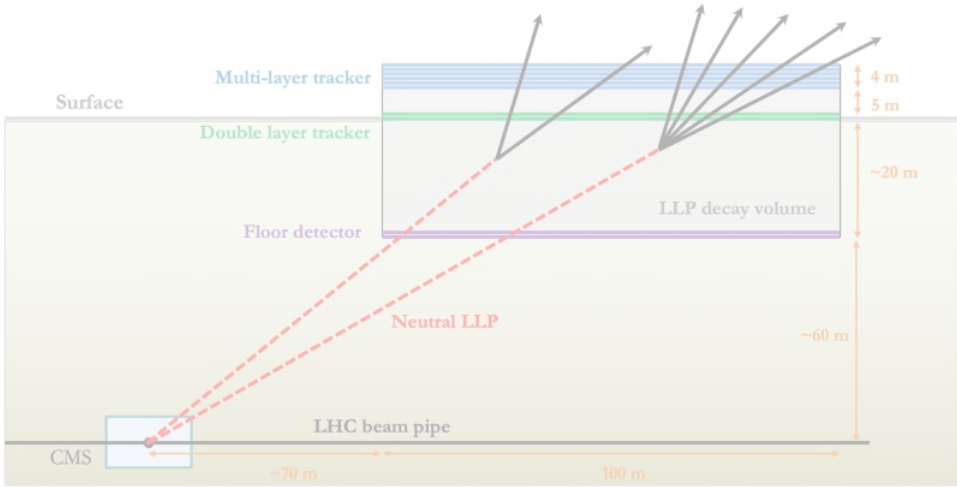
Multi-layer tracker
Surface
Double layer tracker
Floor detector
LLP decay volume
Neutral LLP
LHC beam pipe
CMS
4 m
5 m
~20 m
~60 m
~70 m
100 m

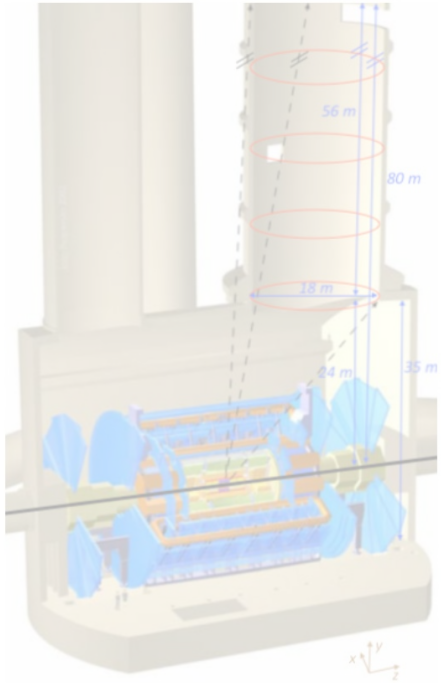
56 m
80 m
18 m
24 m
35 m

CODEX-*b*: bigger bang for your B

- CODEX-*b*: COmpact Detector for EXotics at LHCb
  - Expression of interest: 1911.00481, Snowmass document: 2203.07316.
- Cheap, off-axis (transverse) tracker behind a huge shield and a long distance away from LHCb, in preexisting cavern.
- Trade-off between size and distance.
- Would be located either in the former D1 room or at the current location of DELPHI.
  - Possible some servers are still in the room, possibilities studied.

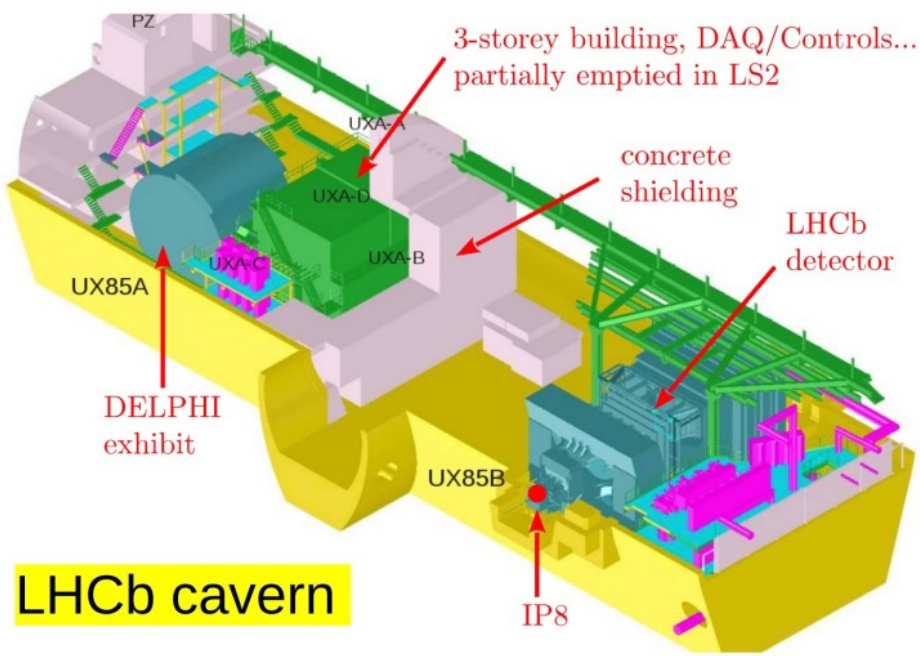

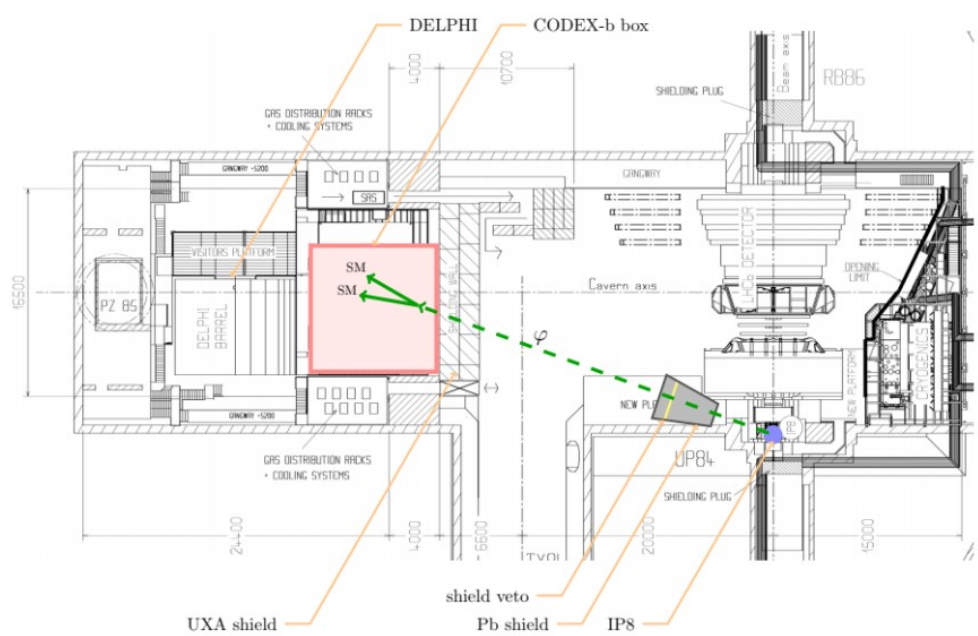

CODEX-*b*: base layout of the detector

- CODEX-*b* is far from the primary vertex → even a reduced angular acceptance corresponds to a large area.
- Need cheap, efficient and fast detection.
- Why fast? Interplay with LHCb is easier.
- Answer: Resistive Plate Chambers (RPC's) – fast, precise, cheap for large area. RPC layers sextets at 4 cm intervals on each box face with 1 cm granularity.
  - Additional 5 layers of triplets inside (improve vertex resolution and tracking efficiency);
  - O(100 ps) timing from RPC's foreseen for mass reconstruction

- No magnetic field, no calorimetry, no Cherenkov
  - Possible to reconstruct mass from geometry, showcased in Phys. Rev. D 97, 015023 (2018).

- Coincidence with rest of the event at LHCb being studied

- Design is still subject to optimisation.

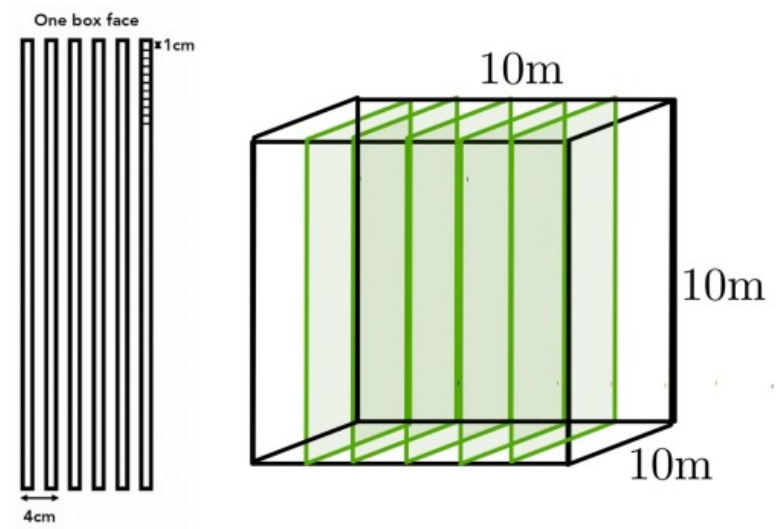

First things first: demonstrator (CODEX-β)

- CODEX-β: demonstrator for CODEX-b with reduced detector surface and no active shield.
  - Will validate reconstruction, background estimates.
- Budget is being finalised for CODEX-β (~150k€): essential for future plans for CODEX-b (O(10M CHF)).
- Working on a detailed installation plan to communicate to the LHCb safety experts, and then the installation team.

! Temptative schedule !

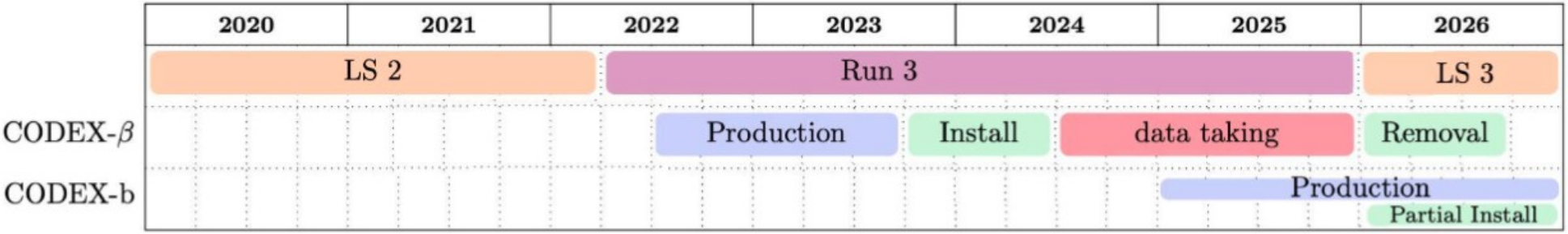

Exploring and tinkering: physics with a hammer and a camera

- Summer 2021, took measurements at IP8, understand how to install the detector.
- Moved forward discussions about how to bring CODEX-β inside, where to get the power from, where exactly to put the detector.
- Mock-up made of plywood to test transportation

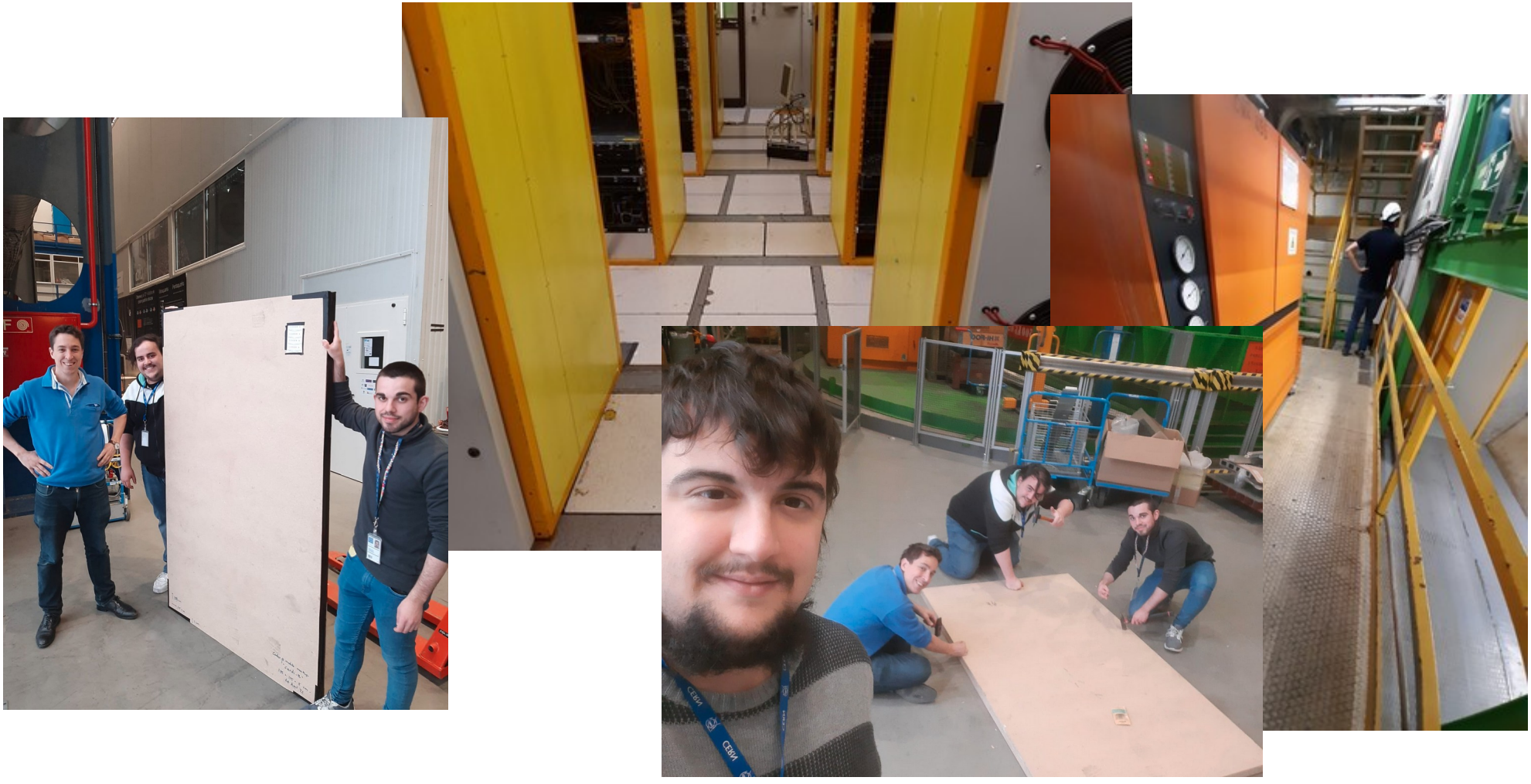

ANUBIS

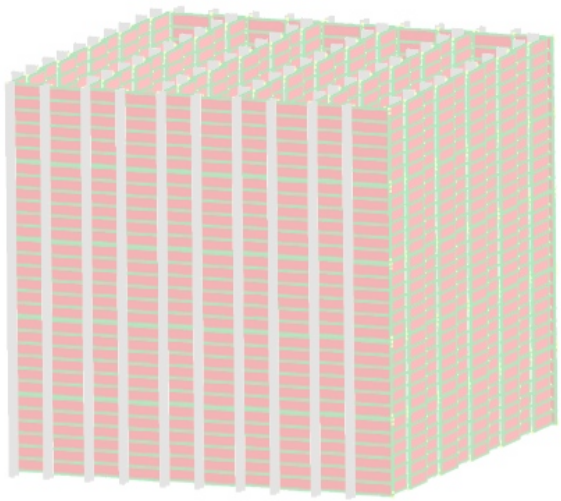

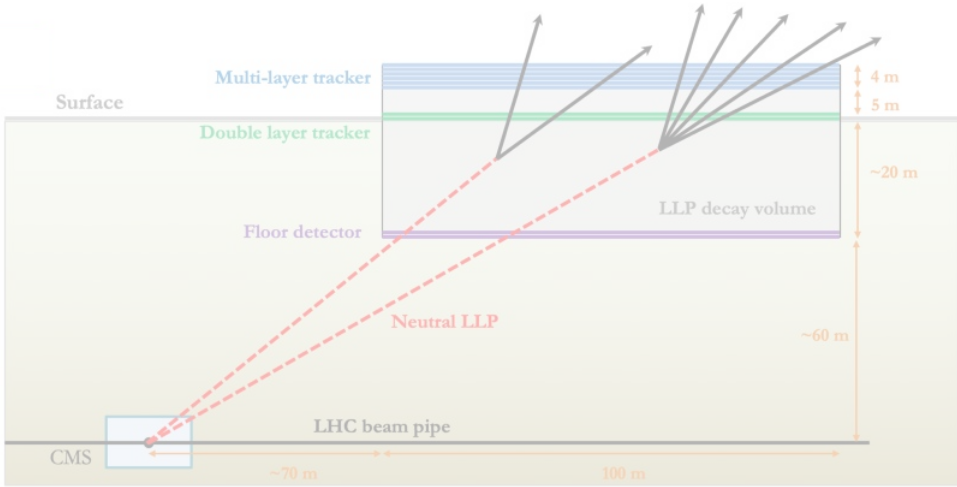
Multi-layer tracker
Surface
Double layer tracker
Floor detector
LLP decay volume
Neutral LLP
LHC beam pipe
CMS
4 m
5 m
~20 m
~60 m
~70 m
100 m

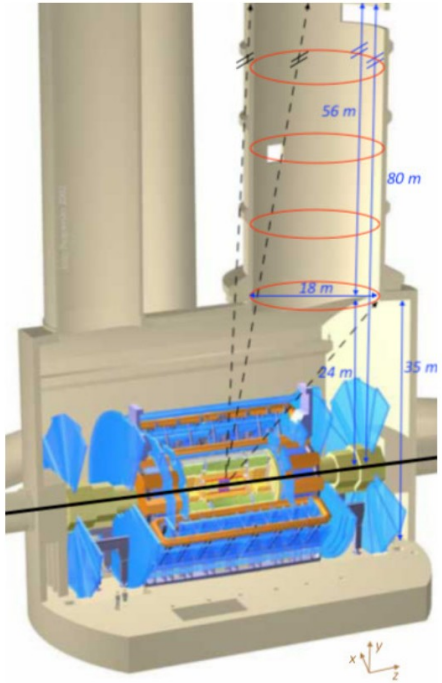
56 m
80 m
18 m
24 m
35 m

ANUBIS: design

- ANUBIS: AN Underground Belayed In-Shaft search experiment.
  - Expression of interest: 1909.13022
- Instrumenting the main service shafts above ATLAS: no extrusion necessary, can use ATLAS as veto and background estimator.
  - For LLP searches in ATLAS muon system: ANUBIS will need 4-50 events for evidence.

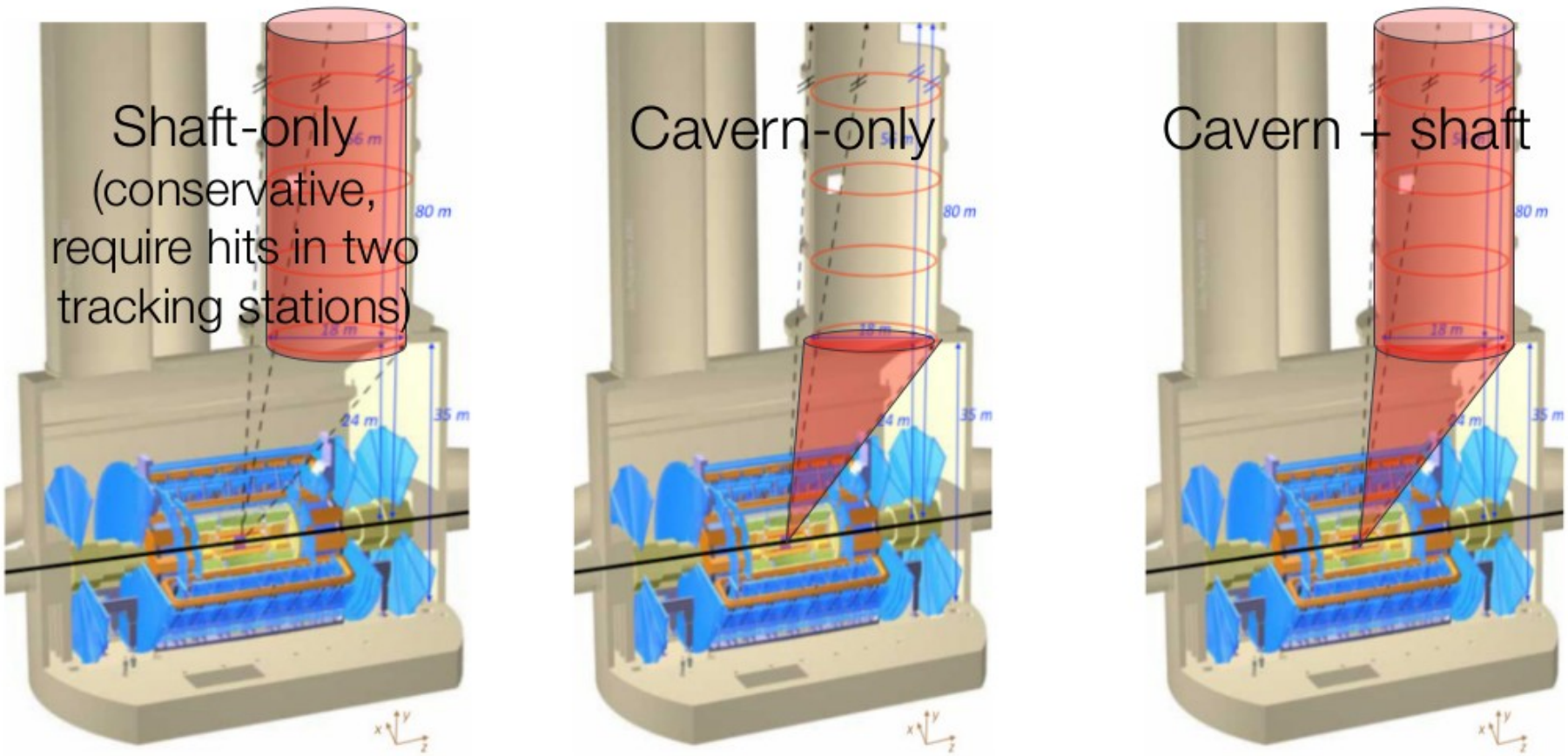

ANUBIS: a case for going pro

- Two main sources: K_L decays (easy: two collimated tracks) and K_L, n material interaction.
  - Latter dealt with by reducing fiducial volume to regions without material.

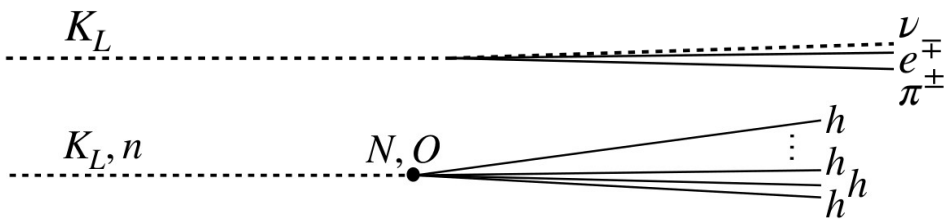

- ProANUBIS: demonstrator installed to:
  - Commissioning hit+track efficiency (2022);
  - Test interaction with ATLAS and muon ID (2022);
  - Secondaries from hadrons interacting with the lid.
  - Check background levels (2023):
    - Punch-through jets (2023);

- Will be moved from the surface (2022) to ATLAS cavern (2023)
  - Lots of handles to commission the detector and Geant4!

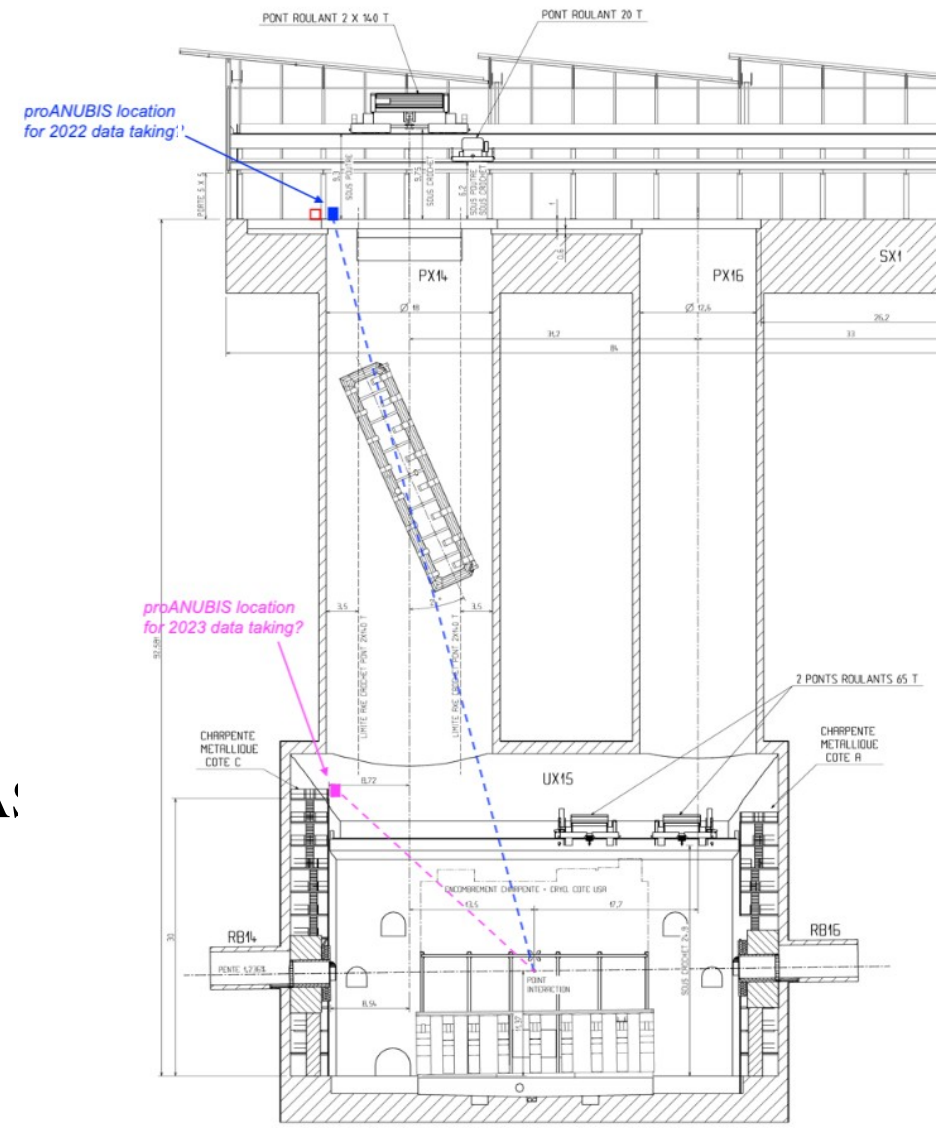

proANUBIS: what it looks like, what it can look at

- Demonstrator
  - Three RPC layers of ~1 x 2 m, 1 m apart: triplet / singlet / doublet (top to bottom
  - Collaboration with CODEX-*b*
  - I-V scans of the gas gaps done for the prototype → as espected!

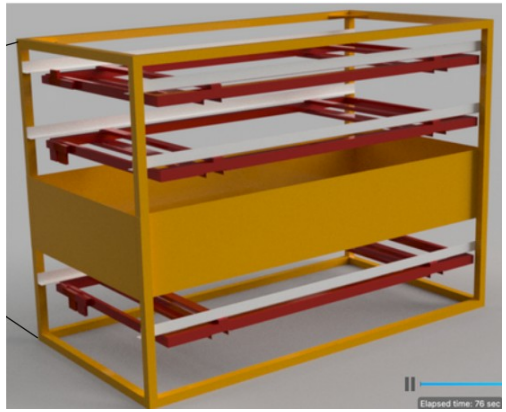

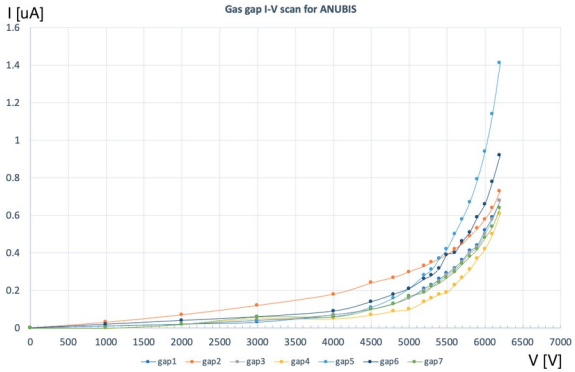

- Possibility to look for more massive muons
  - ATLAS β sensitivity is 2%
  - (pro)ANUBIS has larger time-of-flight distance and better timing resolution (<200ps) → β ~ 0.1%

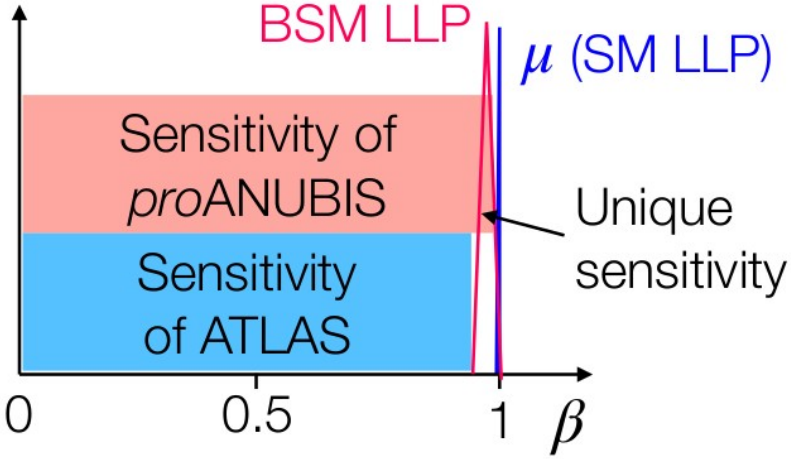

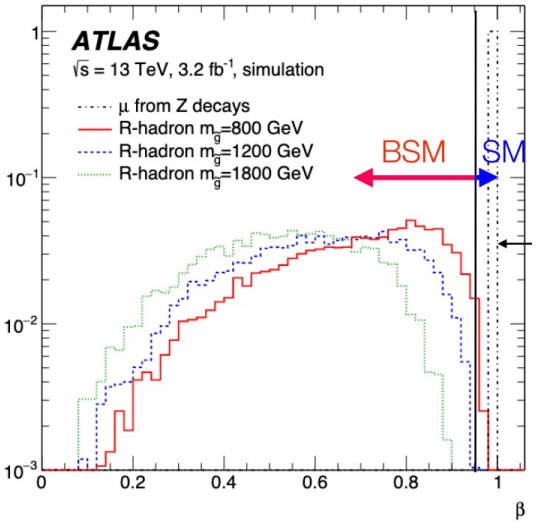

proANUBIS: *it's alive*

MATHUSLA

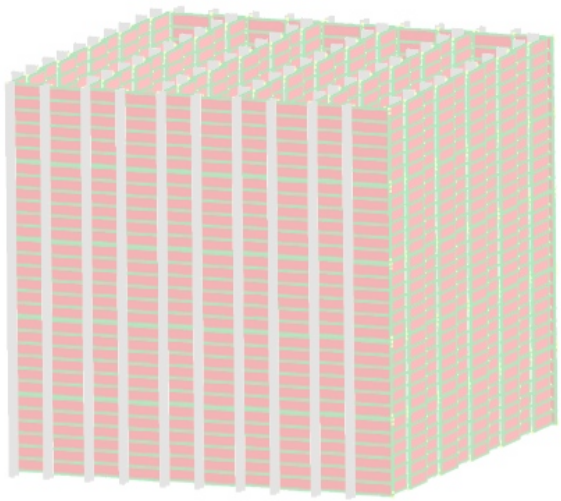

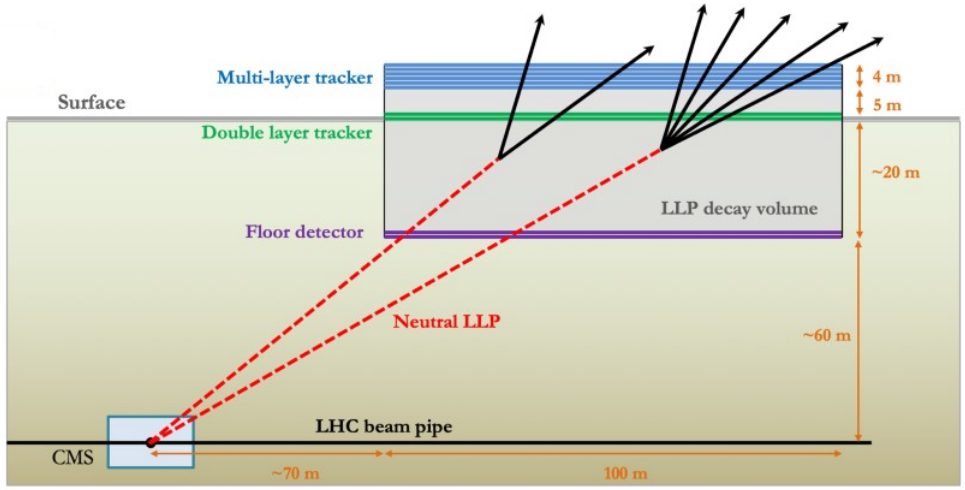
Multi-layer tracker
Surface
Double layer tracker
Floor detector
LLP decay volume
Neutral LLP
LHC beam pipe
CMS
4 m
5 m
~20 m
~60 m
~70 m
100 m

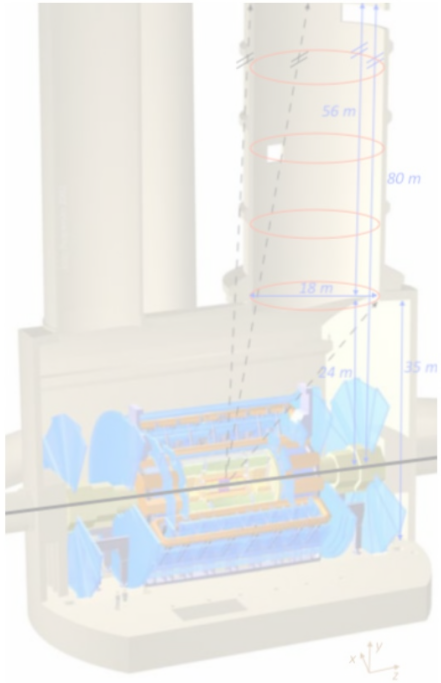
56 m
80 m
18 m
24 m
35 m

MATHUSLA: concept

- MATHUSLA: Massive Timing Hodoscope for Ultra-Stable neutraL pArticles
  - Physics case: 1806.07396; White paper: 2203.08126
- Plus:
  - large distance to IP so few beam background tracks and large τ reach.
  - cheaper than digging a whole new cave.

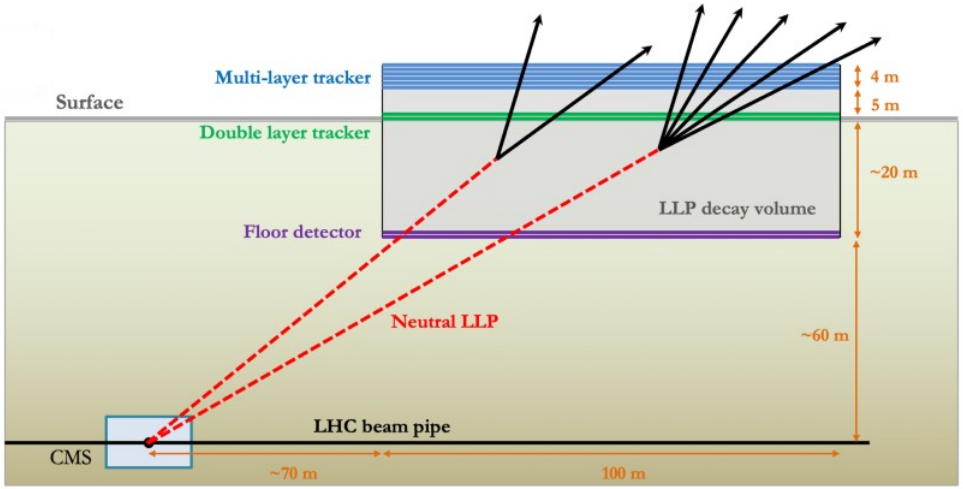

- Minus:
  - Not well shielded against cosmics and atmospheric backgrounds.
- Need excellent background rejection and robust tracking, especially for the floor and ceiling trackers.

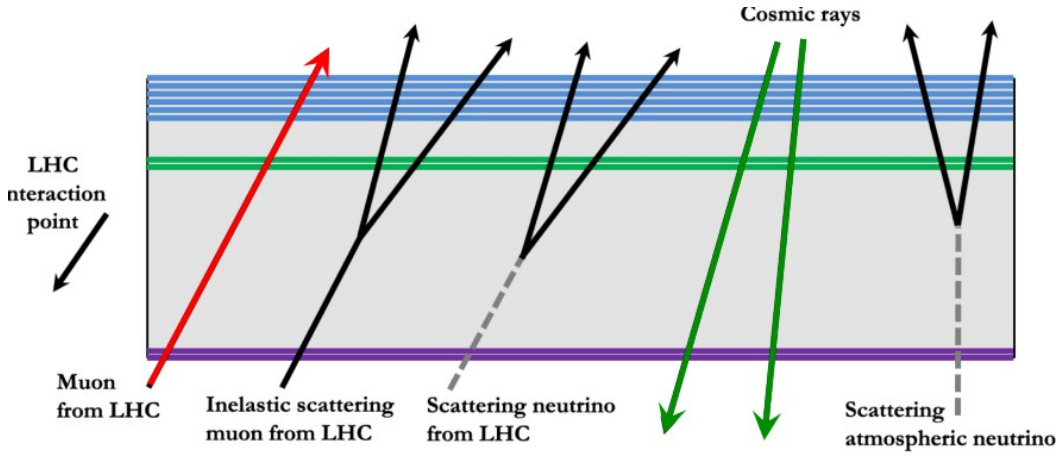

MATHUSLA: pros and cons of background

- Back scatter of V^0 from cosmics and neutrino interactions being studied.

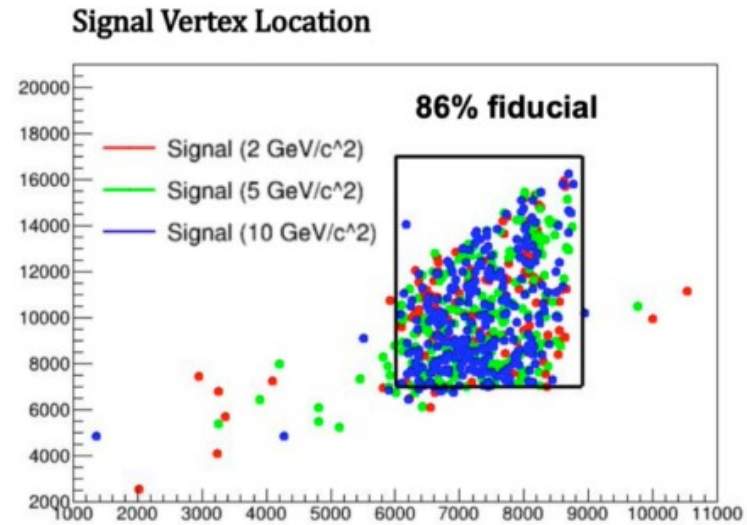

- 10^9 muons will reach MATHUSLA from the IP.
  - Can affect the detector in a few ways → need a very efficient floor veto.

- Large statistics at 'low' energy → could help understand the 'knee' of cosmic rays.
  - Ongoing studies show good resolution on inclined showers (zenith > 60 degrees).
- Planning to build a $9m^2$ demonstrator
  - Validate technology, construction and cost estimates.

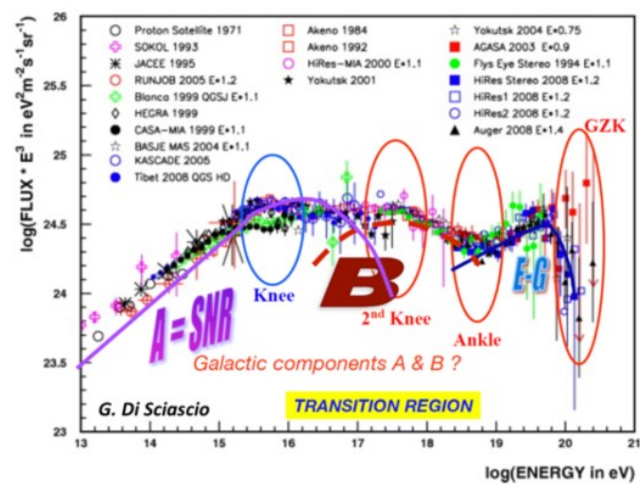

- Working on the physics case for adding a layer of RPC detector to measure also vertical air showers
  - Studies will be made public in coming months.

MATHUSLA: let there be scintillation light

- 81 modules of 9mx9mx30m.
- Each module: 10 layers of 250cm x 3.5-5cm x 1cm extruded strips.

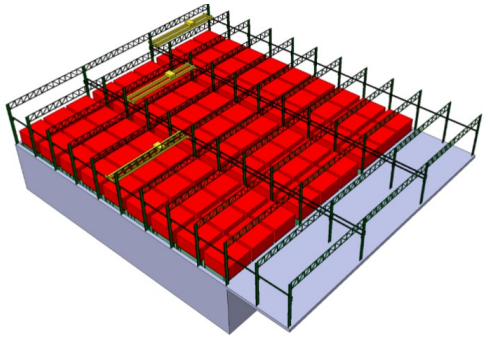

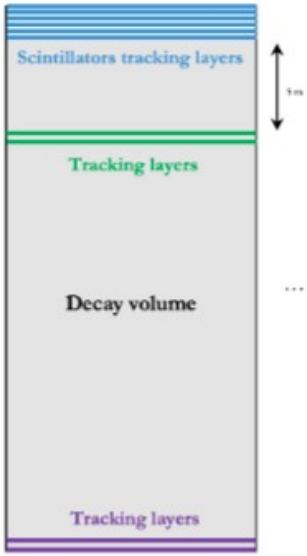

- Alternating the layers orientation to give X-Y segmentation.
- Dark current studies: will need some temperature control.

- Goal of 15 cm rms accuracy on cosmics
  - → timing resolution < 1ns.
- Test setup with a 5m long fibre through 1x4cm extrusion
  - Figure of merit is half the difference.
- Timing resolution = 0.538ns! → 9cm resolution.

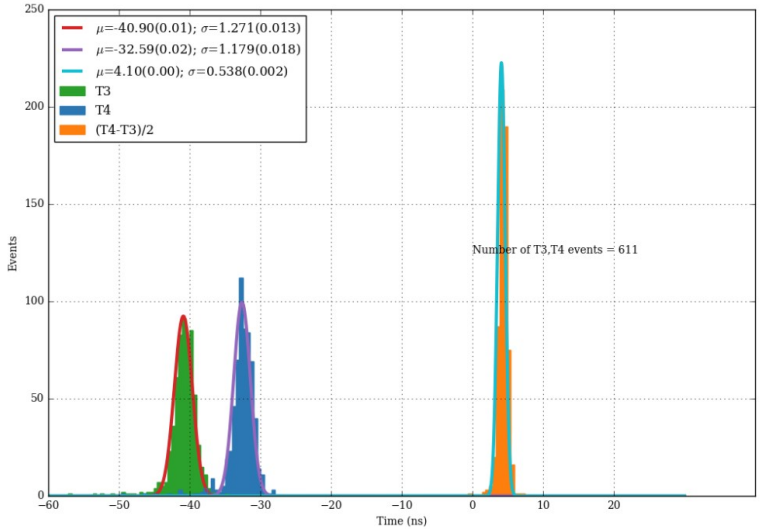

TDR to be released in ~summer 2022.

So, putting things back together

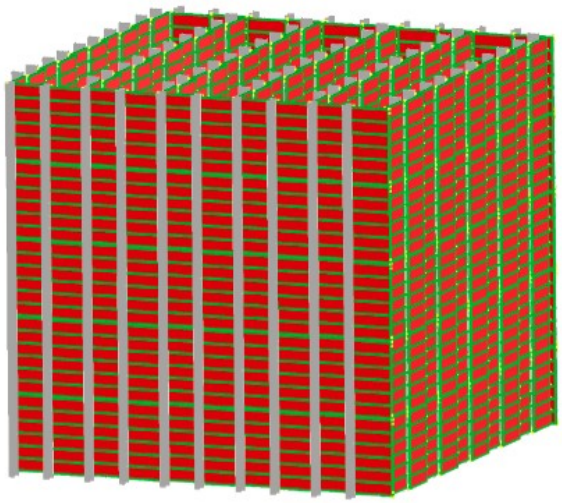

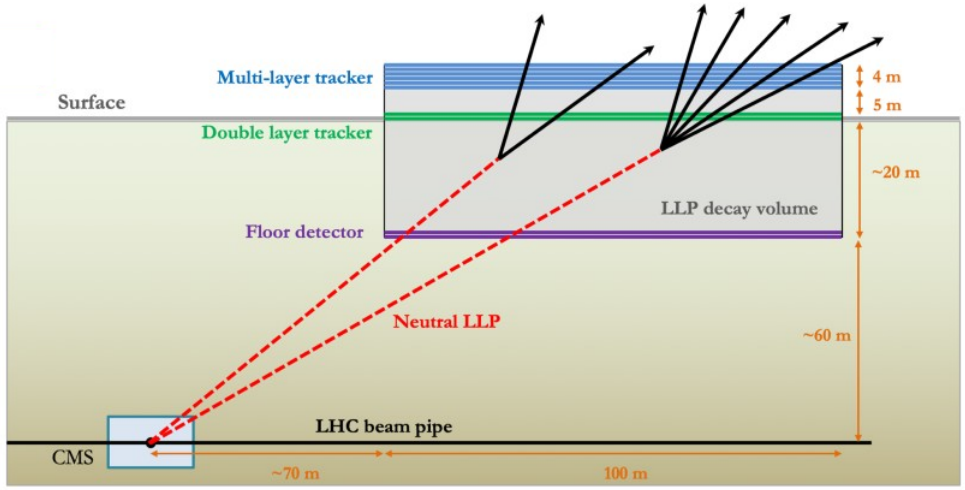

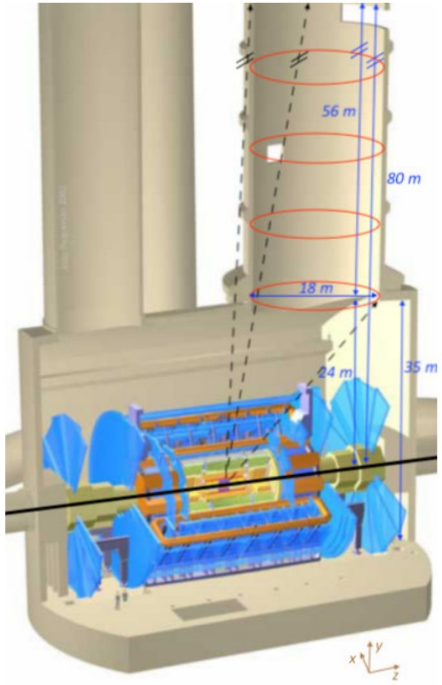

Conclusion

- Dedicated LLP search experiments in the transverse region are comparatively cheap ways to look at vast regions of the parameter space.
- Many models can lead to LLPs existing in those regions → theoretically motivated
- ANUBIS, CODEX-b and MATHUSLA all take advantage of the LHC collision rate and existing infrastructure.
- Things are moving fast now: these collaborations are expanding, and TDRs/demonstrators are on the way → Run 3 will be a pivotal period.

Thank you!