# Commissioning and first performance of the ALICE MID RPCs

**Livia Terlizzi*, on behalf of the ALICE collaboration**

*University and INFN Torino

RPC 2022 - XVI Workshop on Resistive Plate Chambers and Related Detectors

Sep 26th, 2022

# Outline

- A Large Ion Collider Experiment (ALICE)

  → Muon Spectrometer (MS)
  → Muon Identifier (MID)

- MID upgrade for Run 3:

  → MID Resistive Plate Chambers (RPCs)
  → New front-end electronics FEERIC
  → New read-out architecture
  → RPC status at INFN Torino laboratory
  → MID status at CERN

- Conclusions

# Outline

- A Large Ion Collider Experiment (ALICE)

  → Muon Spectrometer (MS)
  → Muon Identifier (MID)

- MID upgrade for Run 3:

  → MID Resistive Plate Chambers (RPCs)
  → New front-end electronics FEERIC
  → New read-out architecture
  → RPC status at INFN Torino laboratory
  → MID status at CERN

- Conclusions

# A Large Ion Collider Experiment (ALICE)

- A Large Ion Collider Experiment (ALICE) at the CERN Large Hadron Collider (LHC) is the experiment specifically designed to study the Quark Gluon Plasma (QGP) in heavy-ion (Pb-Pb) collisions

- During the Long Shutdown 2 of LHC, ALICE achieved a major upgrade of its apparatus:

→ to cope with the increased Pb-Pb collision rate foreseen for Run 3

| Run 2 | Run 3 |
|---|---|
| 10 kHz | 50 kHz |

→ to allow a new ambitious program of high-precision measurements

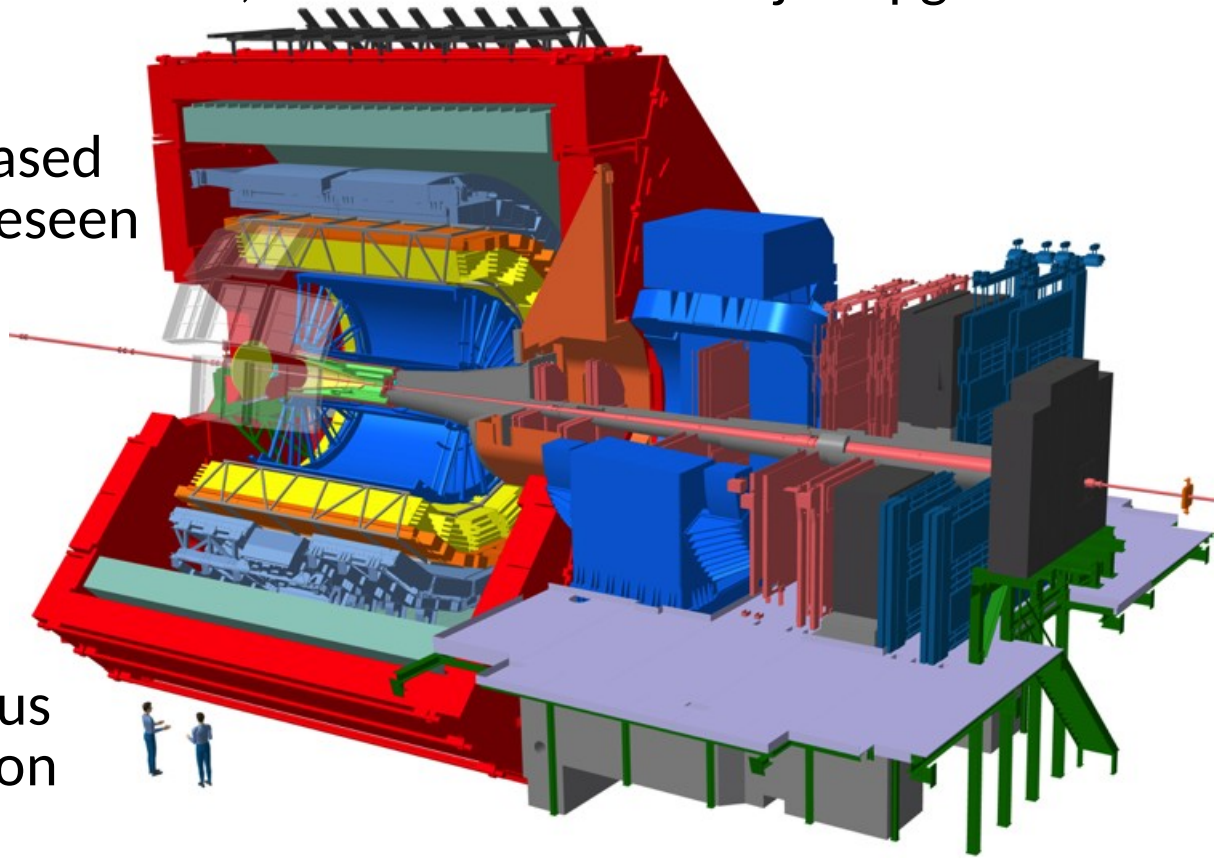

# The ALICE Muon Spectrometer (MS)

- It detects muons in the polar angular range 2° - 9°, i.e. it covers the pseudorapidity range $2.5 < \eta < 4$

- It consists of:

  **1. Absorbers**
  → front hadrons absorber
  → filter iron wall

  **2. Dipole magnet**

  **3. Muon Chambers (MCH)**
  → 5 stations of 2 planes of Cathode Pad Chambers (CPC) and Cathode Strip Chambers (CSC)

  **4. Muon TRigger (MTR), now Muon IDentifier (MID)**
  → 2 stations of 2 planes of Resistive Plate Chambers (RPCs)

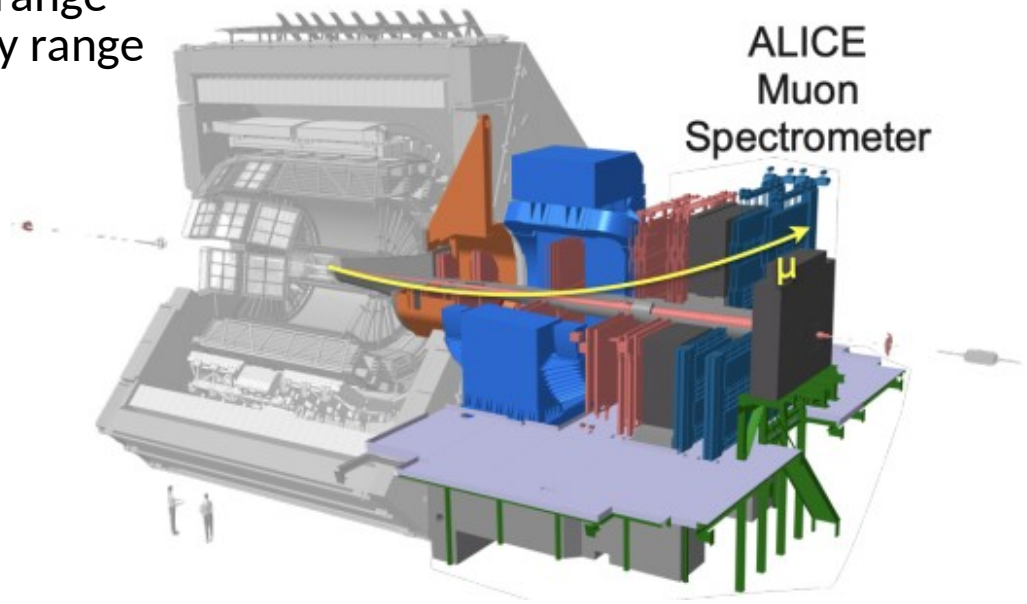


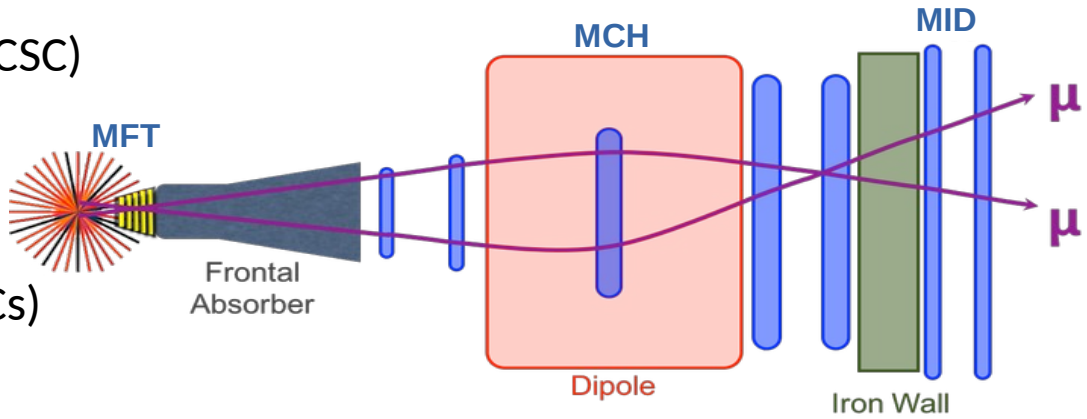

# Muon IDentification (MID) (1)

- The MID consists of **72 Resistive Plate Chambers** arranged in 2 stations of 2 planes each
- each plane is 5.5 x 6.5 $m^2$, with 1.2 x 1.2 $m^2$ central hole to allow the beam pipe and shielding
- the RPCs are equipped with **orthogonal strips** in order to provide the spatial information along the X and Y directions, for a total of 21k strips with 1, 2 and 4 cm pitch.

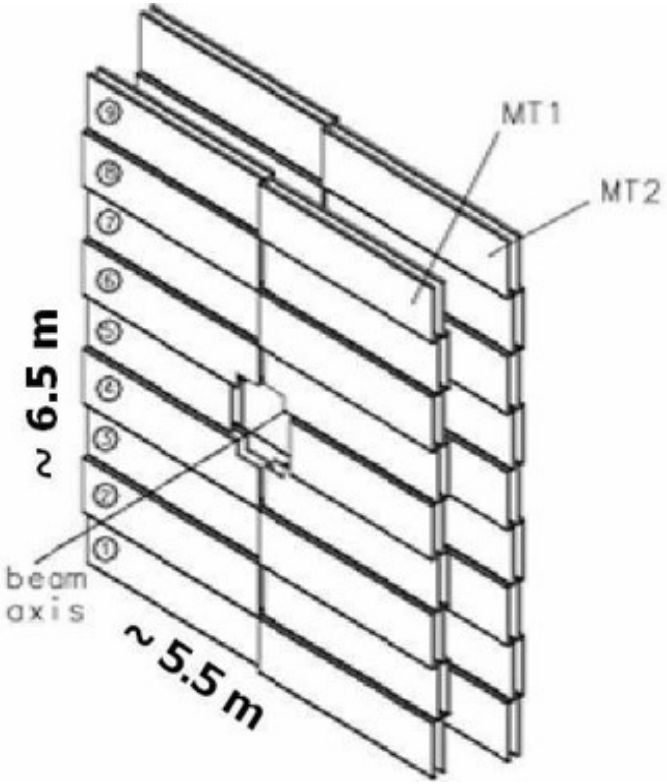


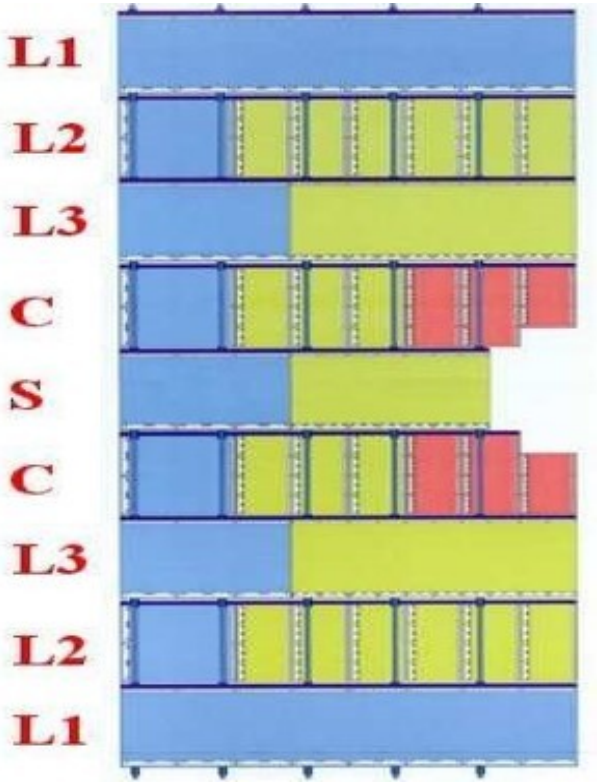

# Muon IDentification (MID) (2)

- Starting from Run 3, ALICE is running in **continuous readout mode** (i.e. without trigger) and the Muon Trigger has become a Muon IDentifier (MID)
  → this required an upgrade of the read-out electronics which was **completed** during the Long Shutdown 2

- to cope with the increased counting rate and to reduce aging effects, RPC detectors are now operated at lower gain thanks to a **new front-end electronics** **(FEERIC ASIC)** including a pre-amplification stage

- some RPCs have integrated a non-negligible charge and **aging effects** might lead to sub-optimal performance for some RPCs
  → **new production of RPCs** in order to replace ~25% of the detectors currently installed in ALICE

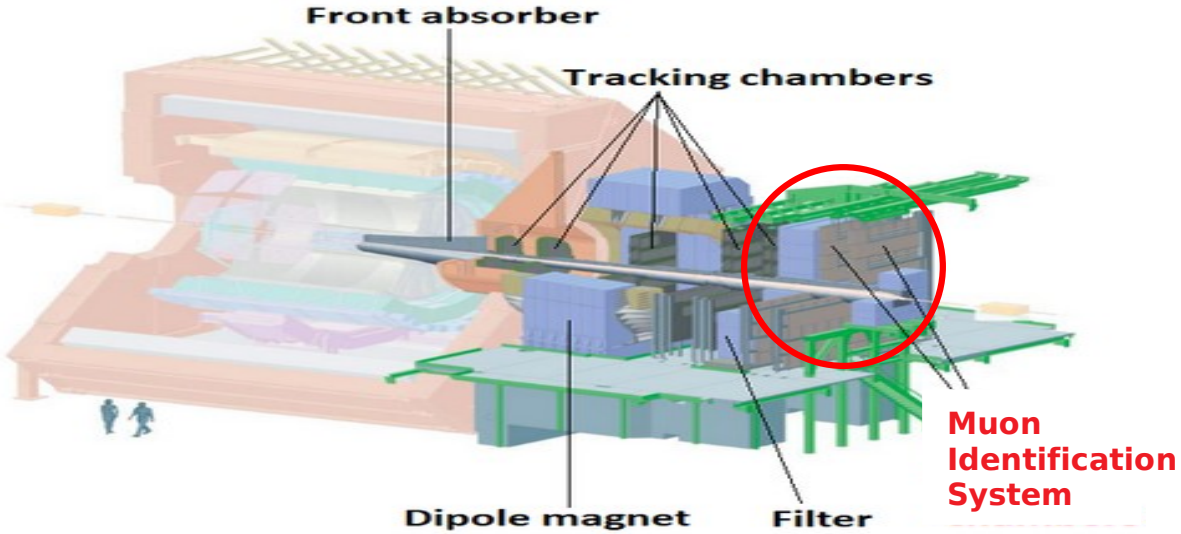


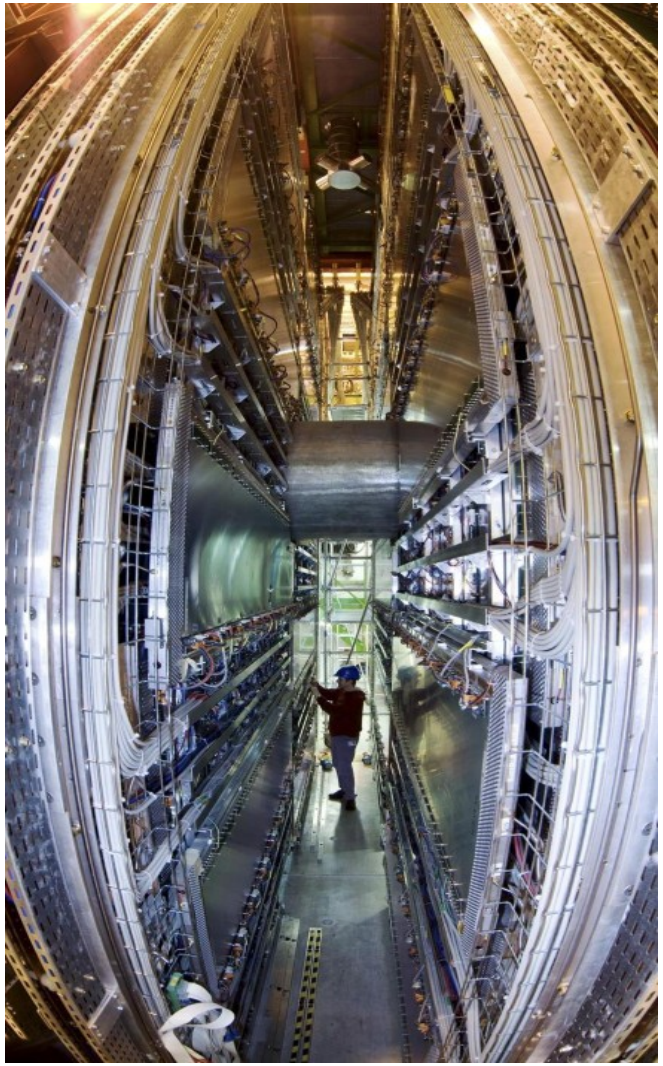

# Outline

- A Large Ion Collider Experiment (ALICE)

  → Muon Spectrometer (MS)
  → Muon Identifier (MID)

- MID upgrade for Run 3:

  → MID Resistive Plate Chambers (RPCs)
  → New front-end electronics FEERIC
  → New read-out architecture
  → RPC status at INFN Torino laboratory
  → MID status at CERN

- Conclusions

# MID Resistive Plate Chambers (1)

- ALICE MID RPCs:
  → **2mm single** gas gap detectors
  → resistive **bakelite** electrodes, 2mm thick, $\rho \simeq 3 \times 10^{9} - 1 \times 10^{10}\ \Omega$ cm
  → the signal is picked-up inductively by means of copper strips with 50 Ω impedance

- **During Run 1 and 2** ALICE RPCs worked with:
  → effective applied HV of about 10.2 – 10.5 kV at 970 mbar of pressure and 20° C
  → maxi-avalanche mode (average charge per hit of 100 pC)
  → gas mixture: 89.7% $C_2H_2F_4$, 0.3% $SF_6$, 10% *i*-$C_4H_{10}$, humidified at 35-40%

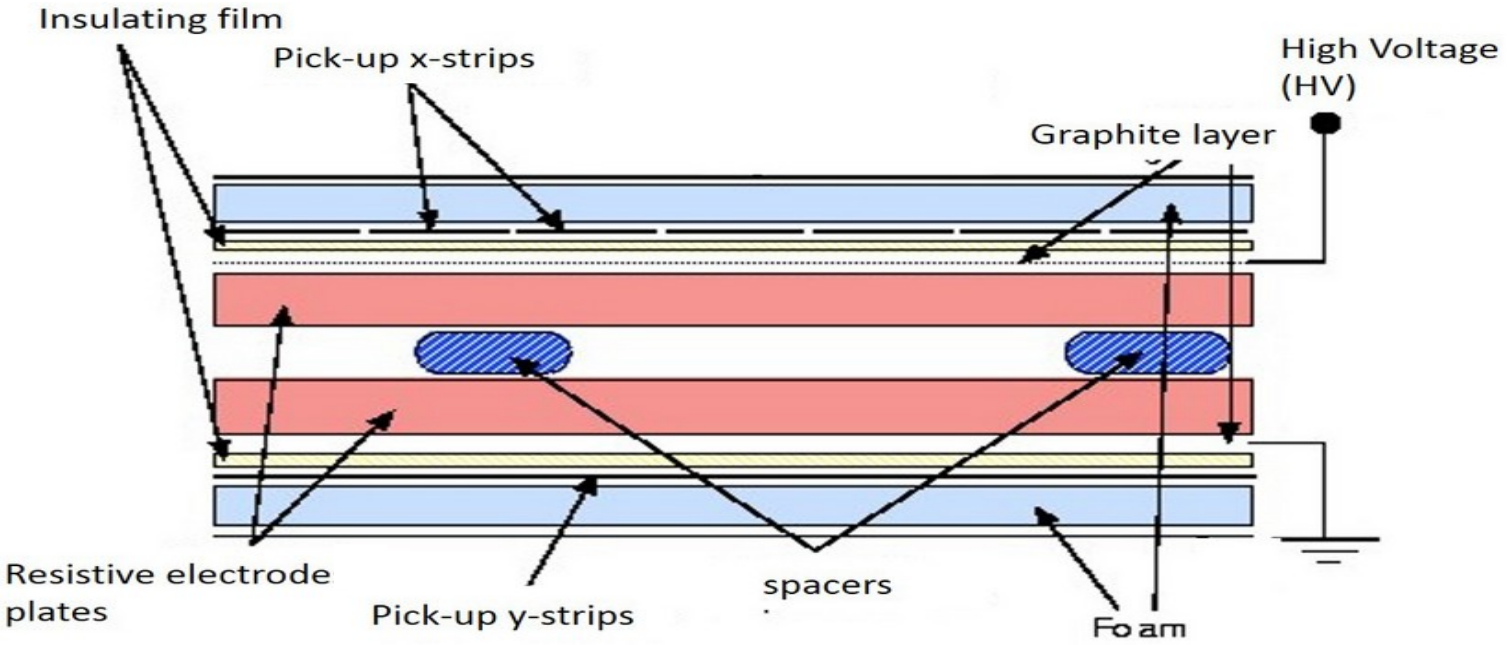

# MID Resistive Plate Chambers (2)

- **For Run 3**:

  → **same gas mixture** as Run 1 and 2: 89.7% $C_2H_2F_4$, 0.3% $SF_6$ , 10% *i*-$C_4H_{10}$, humidified at 35-40%
  → **lower effective applied HV** (thanks to the new FEE), at 970 mbar of pressure and 20° C. New HV working point values definition **ongoing**
  → **avalanche mode** instead of maxi-avalanche

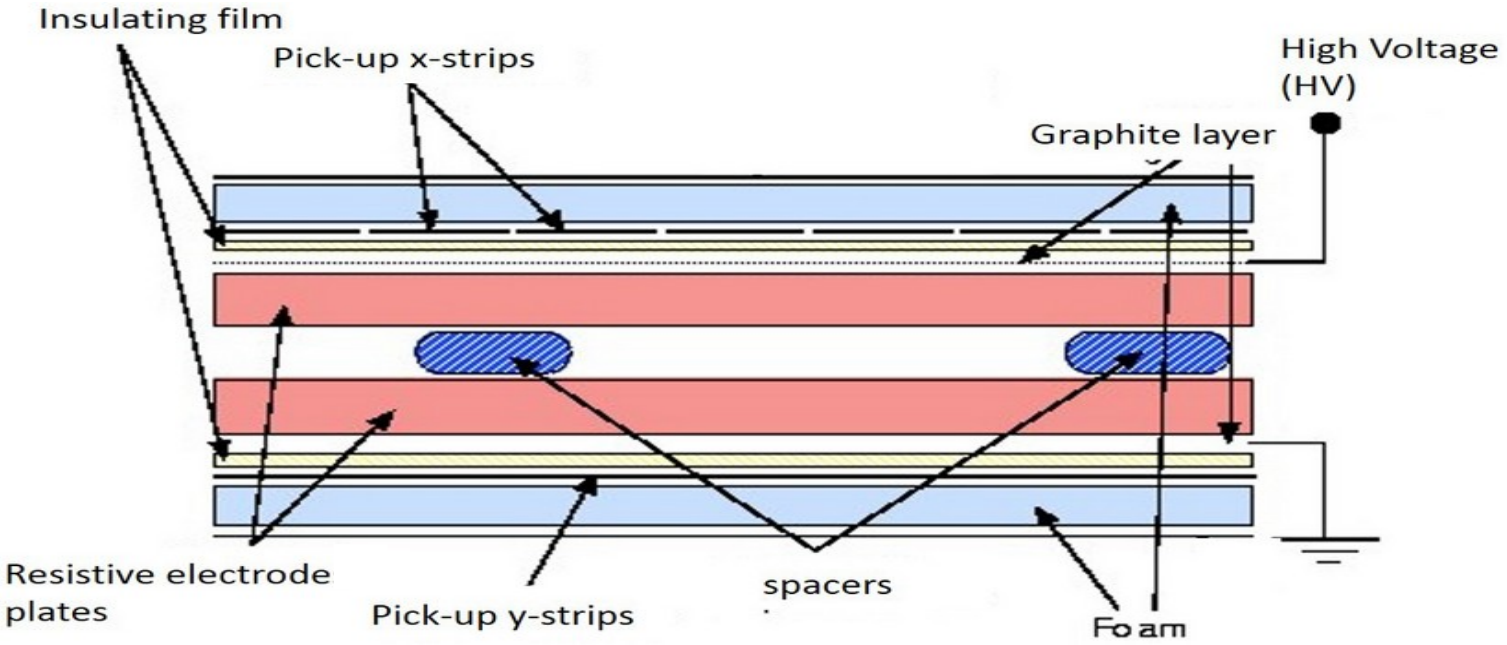

# The new front-end electronics: FEERIC

- Goal: **slow down RPC aging** after LS2 and **improve rate capability**

  → FEERIC has a pre-amplification stage for RPCs
  → 20992 channels, 2384 FEERIC cards (2720 spare included)
  → installation completed in July '19
  → **now under commissioning with pp Run 3 data**

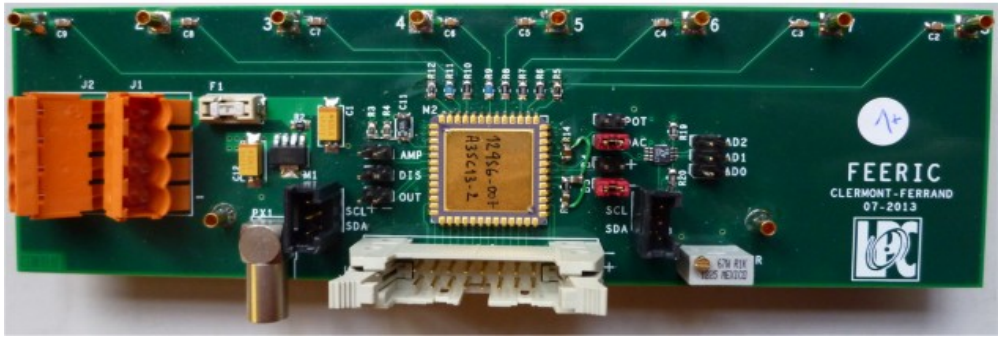


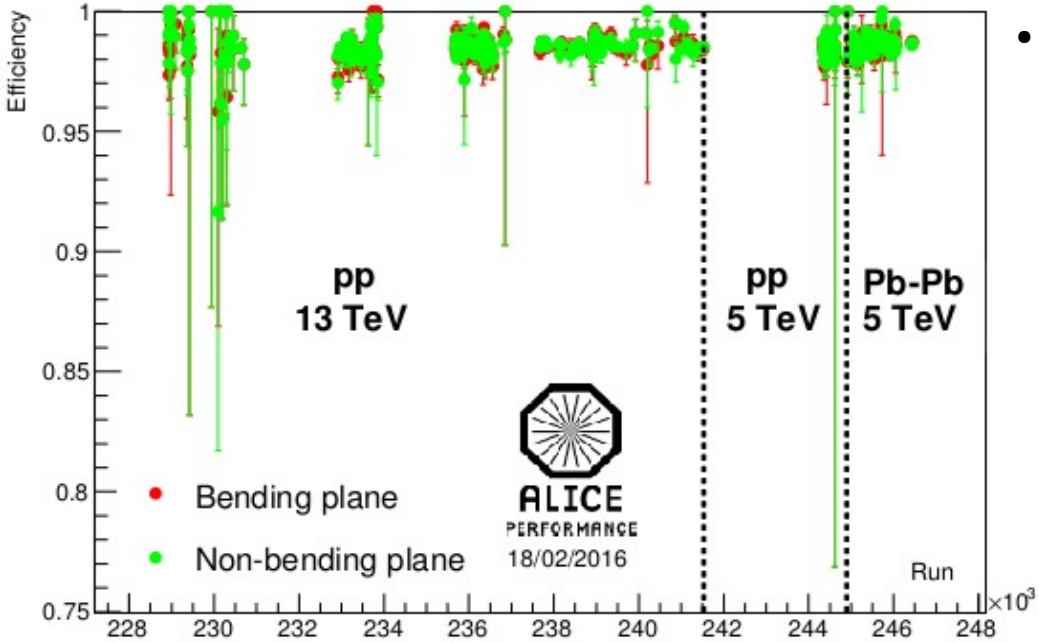


- One RPC was equipped with FEERIC during Run 2

  → **factor 3-5 less charge** released in the RPC gas volume with FEERIC
  → lower HV working point w.r.t. to Run 2
  → **efficiency higher than 97%** in both bending and non bending plane, for different collision system
  → **very satisfactory performance and stability**

# Wireless FEERIC threshold distribution

- New **wireless threshold distribution**:

  → **thresholds adjustable for each single FEERIC card** instead per RPC side like in Run 1 and Run 2
  → present Xbee system slow and unstable
  → agreement from TC+CERN-IT in June 2021 to upgrade to WiFi (band 2.4 GHz)

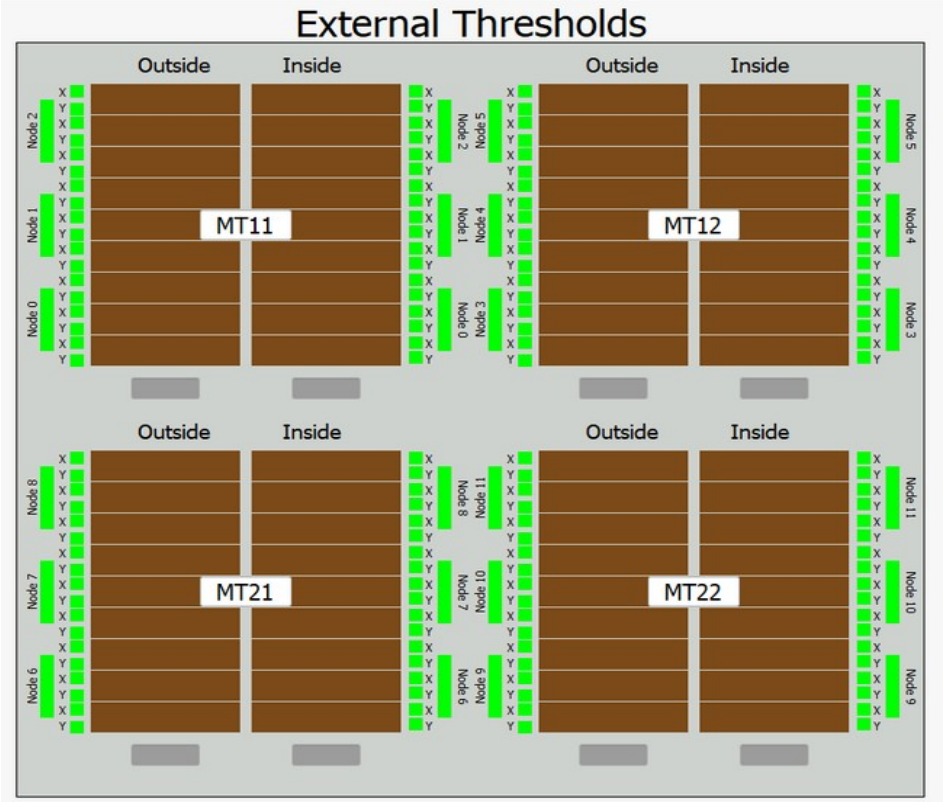


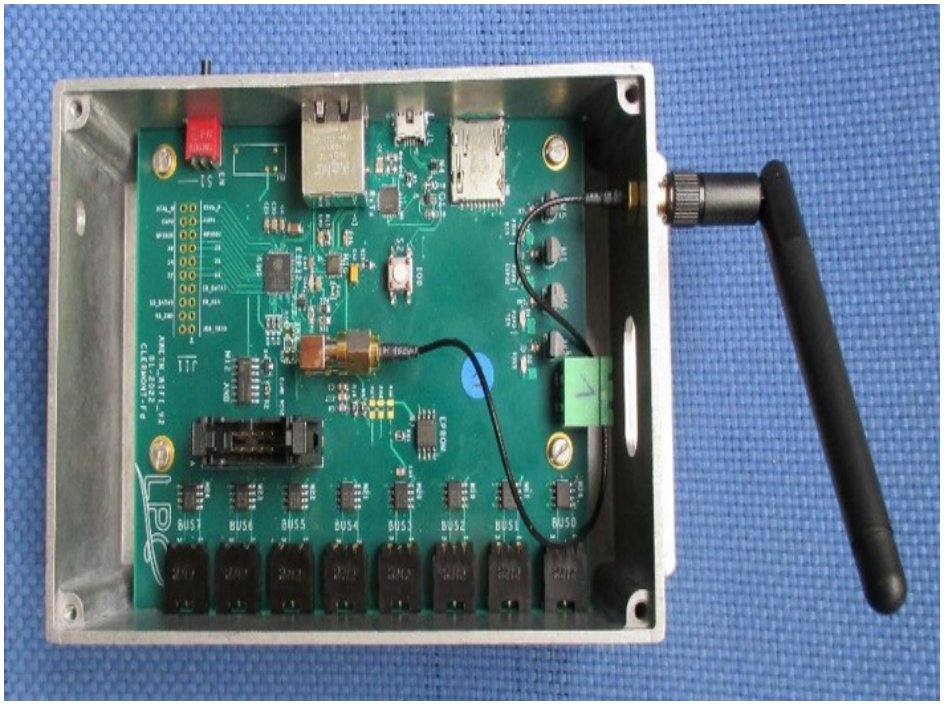

- **Production (26 cards + spares) started**
  → 1 wifi router per side, connected to DCS via ethernet
  → 12 wifi stations per side, connected to FEERIC via $I^2C$
- Installation foreseen during winter shutdown (December 2022 – January 2023)

# Readout architecture

- **New readout electronics for continuous mode**

- Replacement of all the cards in operation during Run 1 and Run 2
  - → 234 Local cards, up to 16 per VME crate
  - → 16 Regional cards, interfaced with the new CRU via 2 GBTx links
  - → 16 J2-bus between the Local and Regional card

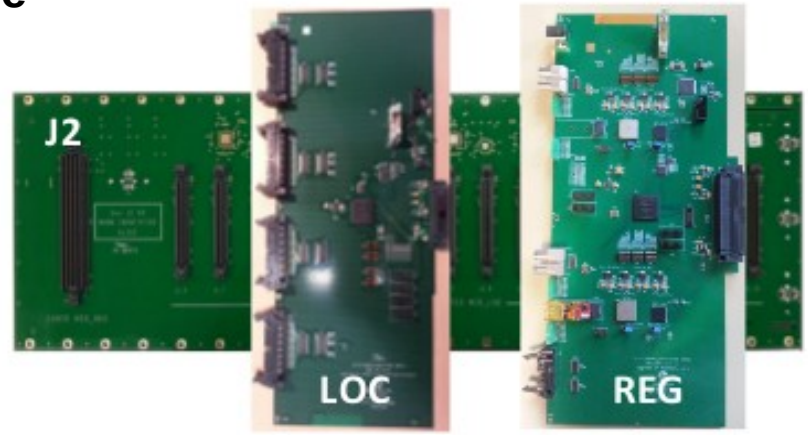


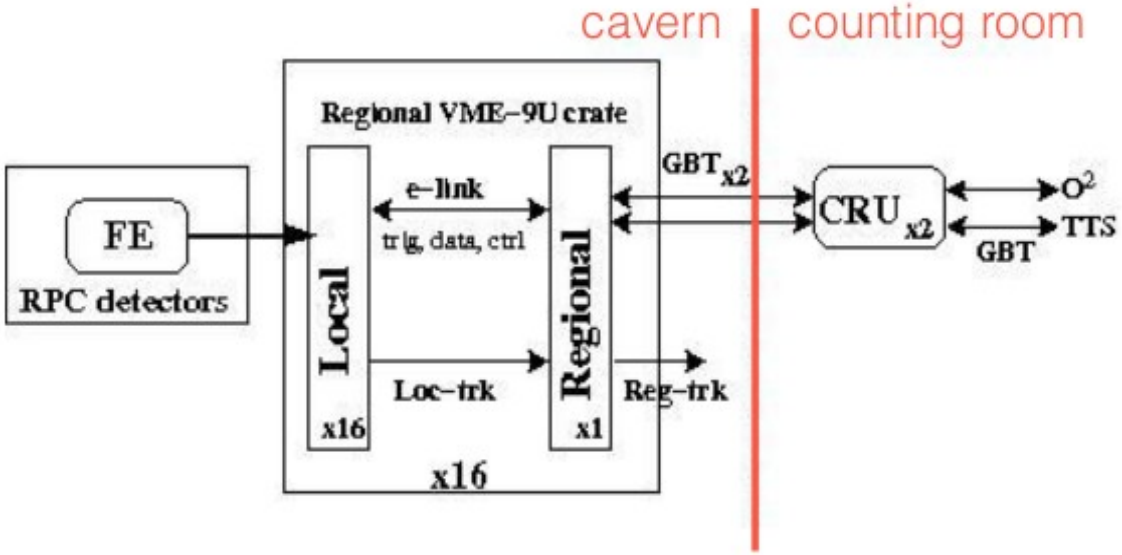


- One full crate: up to 16 Local, 1 Regional, 1 J2-bus

- **In total: 16 similar crates for the full project**

# RPC production and status in INFN-TO lab (1)

- RPC production before 2019 highly **unsatisfactory**
  → **inefficiency holes** at the HV working point (WP)
  → **high currents** (several tens of μA)
  → general **carelessness** in the production process
  → **not possible to use them in ALICE**

- New pre-production batch of 3 RPCs at the end of 2019, after several interactions with the firm

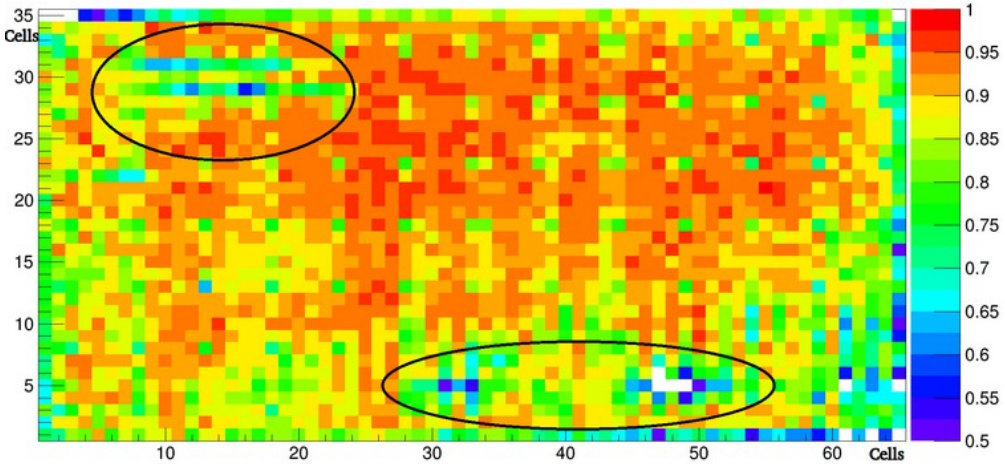


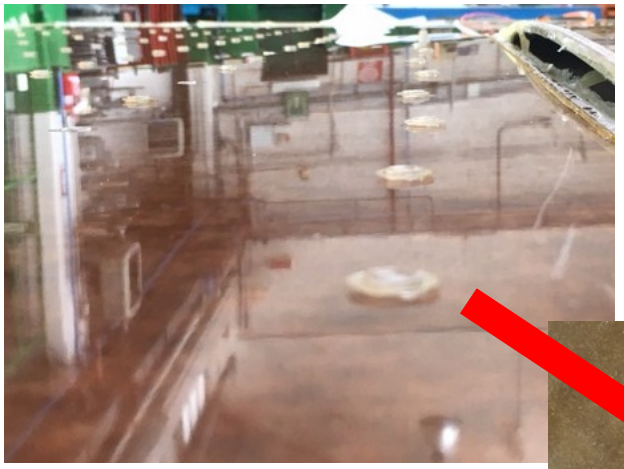

# RPC production and status in INFN-TO lab (2)

- All 3 RPCs tested in 2020 showed:

  → an **efficiency higher than 95%** around the WP (~ 8400V for streamer)
  → **low currents** (lower than 1μA)
  → **can be used in ALICE**

- New production batch of 30 RPCs in 2021

  → delay due to the commissioning of the brand **new INFN-TO laboratory**

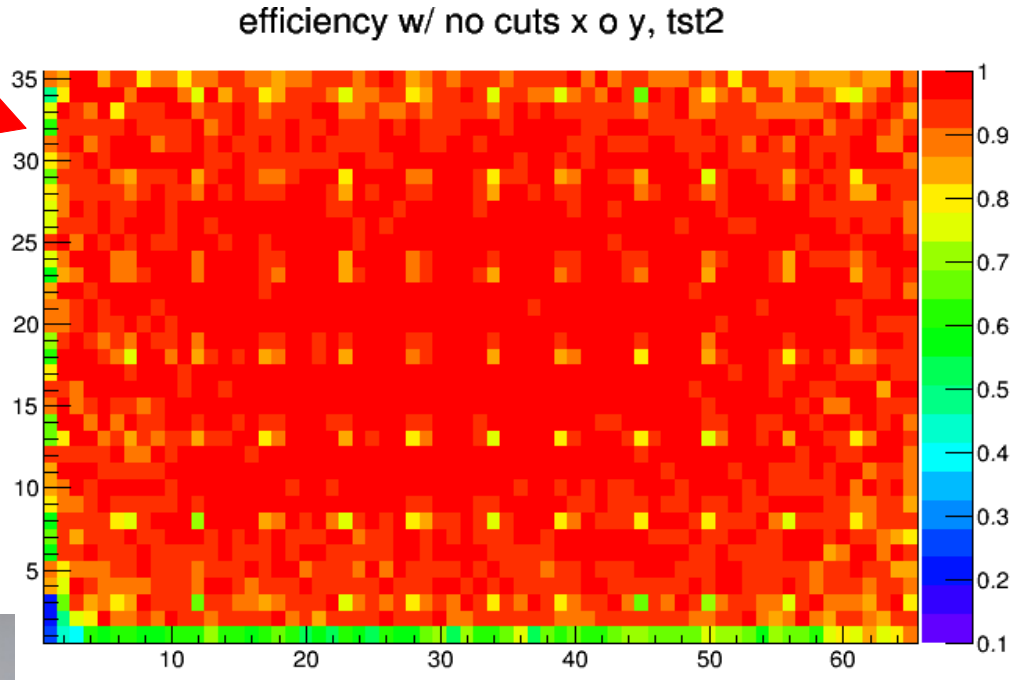


- 4 RPCs tested so far. All of them show:

  → an efficiency even higher than the 2019 pre-production batch (**WP at ~8100V**)
  → **slightly higher currents**, between 2μA and 10μA (causes under investigation)
  → **can be used in the ALICE cavern**

# MID status at ALICE at CERN (1)

- Several **hardware interventions** during the commissioning without BEAMS:

  → **gas leakage**, **solved** after recovery on RPCs side

  → **HV trips**, **solved** after replacement of several faulty cables and connector on chamber side

  → **1 HV board** (for 6 RPCs) replaced

- Average current value at 9500 V:

  → **1.92 µA in 2018**

  → **4.59 µA in 2021**

  → **2.23 µA in 2022** (**after the intervention in cavern**)

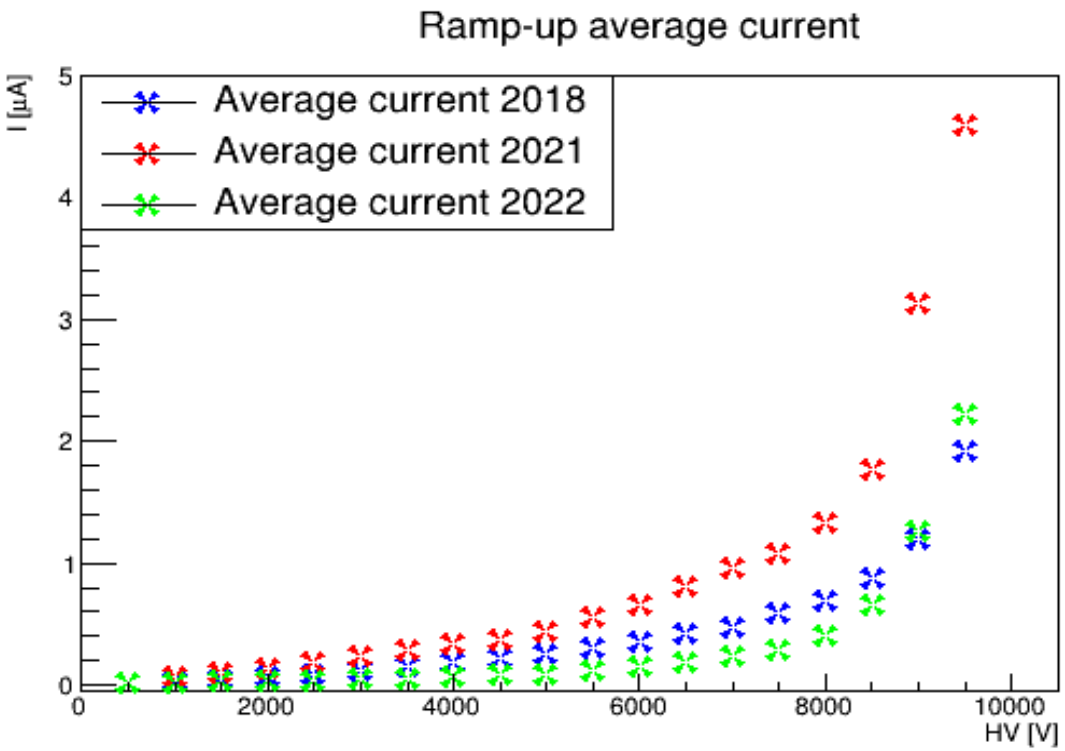

# MID status at ALICE at CERN (2)

- The entire system was **READY** when first Run 3 STABLE BEAMS at top energy arrived on July 5th
- **Commissioning with first pp collisions ongoing**

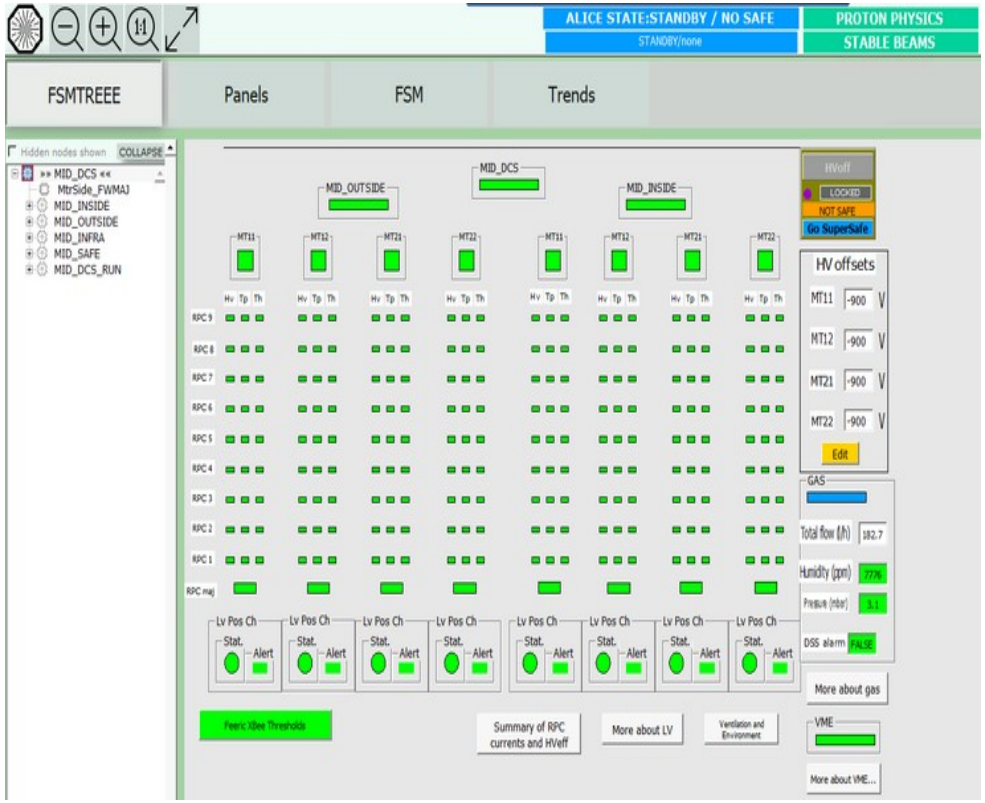


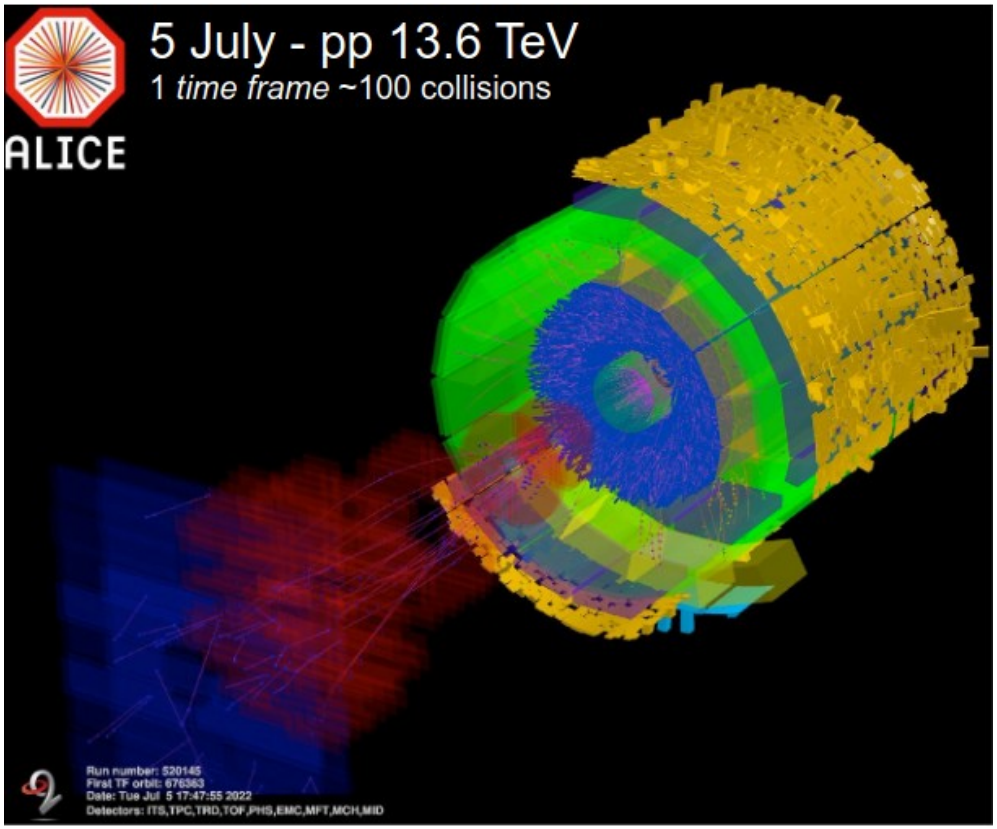


- Up to now, MID is **always READY and taking data** with ALICE when there are collisions

# MID status at ALICE at CERN (2)

- **Online Quality Control**:

→ single-hit level quality control QC done
→ MID tracks development ongoing
→ matching between the MID and the other muon detectors ongoing

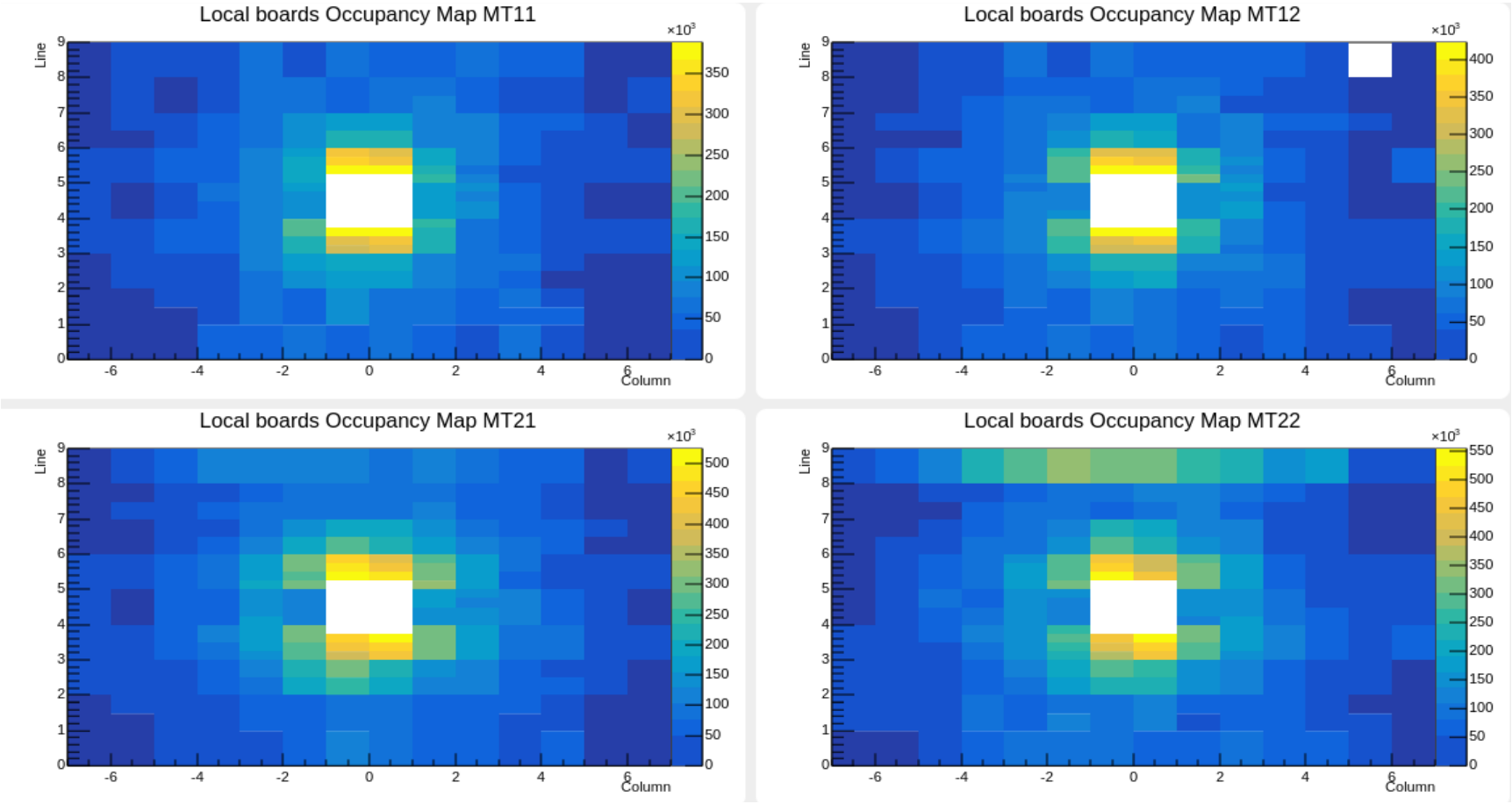

# HV scan for efficiency measurements

- HV scan performed both with cosmics and pp data to compute the efficiency of the 72 RPCs

- Scan performed at step of 100V, with an offset with respect to Run 2 HV working point from -500V to -1400V

- Analyses of data taken with cosmics **ongoing**

  → **for some RPCs statistics is not enough to compute the efficiency only with cosmics data**

- The HV scan **data taking** for pp collisions is still **ongoing**

  → **stopped** for the moment due to the LHC NO BEAM status which lasted for more than 4 weeks

  → **the HV scan with pp will be completed in few days as soon as stable beams will be back**

# Conclusions

- **MID has been upgraded** with new front-end and readout electronics to cope with the higher interaction rates in Run 3
- **FEERIC** FE electronics in good shape, *in situ* tests proved fully satisfactory
- New **RPC gas gap** tests ongoing in Torino laboratory: **promising results so far**
- All the components for the MID **data readout chain** have successfully been tested and installed
- HV working point and threshold optimisation is **ongoing**
- **System status summary at CERN**:

  → **all ALICE MID 72 RPCs are operational**
  → **readout electronics ok**
  → **stable partecipation in data-taking**
  → **QC under development**

# References


1. ALICE Collaboration, *The ALICE experiment at the CERN LHC*, JINST 3, S08002 (2008).

2. ALICE Collaboration, *Letter of Intent for the Upgrade of the ALICE Experiment*, CERN-LHCC-2012-012, LHCC-I-022, 2012.

3. *ALICE dimuon forward spectrometer: Addendum to the Technical Design Report*. Technical Design Report ALICE. CERN, Geneva (1999).

4. R. Arnaldi et al., *A low-resistivity RPC for the ALICE dimuon arm*, Nuclear Instruments and Methods in Physics Research Section A: Accelerators, Spectrometers, Detectors and Associated Equipment, Volume 451.2 (2000) 462-473

5. R. Arnaldi et al., *Ageing test of RPC for the Muon Trigger System for the ALICE experiment*, IEEE Symposium Conference Record Nuclear Science 2004., 2004, pp. 2072-2076 Vol. 4.

6. S. Manen, P. Dupieux, B. Joly, F. Jouve and R. Vandaele, *FEERIC, a very-front-end ASIC for the ALICE muon trigger resistive plate chambers*, 2013 IEEE Nuclear Science Symposium and Medical Imaging Conference (2013 NSS/MIC), Seoul, 2013, pp. 1-4.

7. The ALICE Collaboration, *Upgrade of the ALICE Read-out & Trigger System*, CERN-LHCC-2013-019, July 2014.

**Thank you for your kind attention!**