A four-channel front-end readout ASIC for high hit rate gas detector

Yuxin Qiao[a], Chaosong Gao[a], Jun Liu[a], Danfeng Li[a], Zhengyu Hu[a], Xiangming Sun[a] and Guangming Huang[a]
[a]PLAC, Key Laboratory of Quark and Lepton Physics (MOE), Central China Normal University, Wuhan, Hubei 430079, China
yuxinqiao@mails.ccnu.edu.cn, chaosonggao@mail.ccnu.edu.cn

Abstract

The High-density High-precision High-speed Front-End Electronic (HFEE) is widely used in the high hit rate gas detectors. The design and characterization of a HFEE prototype is presented in this paper. The prototype chip is composed of four channels and each channel consists of a charge-sensitive preamplifier, a pole-zero cancellation circuit, a S-K filter and a gain amplifier, which has been manufactured in a standard CMOS 130 nm process. Measurement shows that the equivalent noise charge is about 5111e- + 46.6/pF, the non-linearity is less than 1.25% and the hit rate is up to 10MHz.

Introduction

- **The gas detector has been widely applied in high energy physics experiments since the gas detector has the advantages of large area, high spatial and time resolution.**
- **The future application of gas detectors requires the ASICs with an amount of channels and high event rate processing capacity.**
- **We design a High-density High-precision High-speed Front-End Electronic (HFEE) prototype with four channels, which has been manufactured in a standard CMOS 130 nm process.**

HFEE Structure

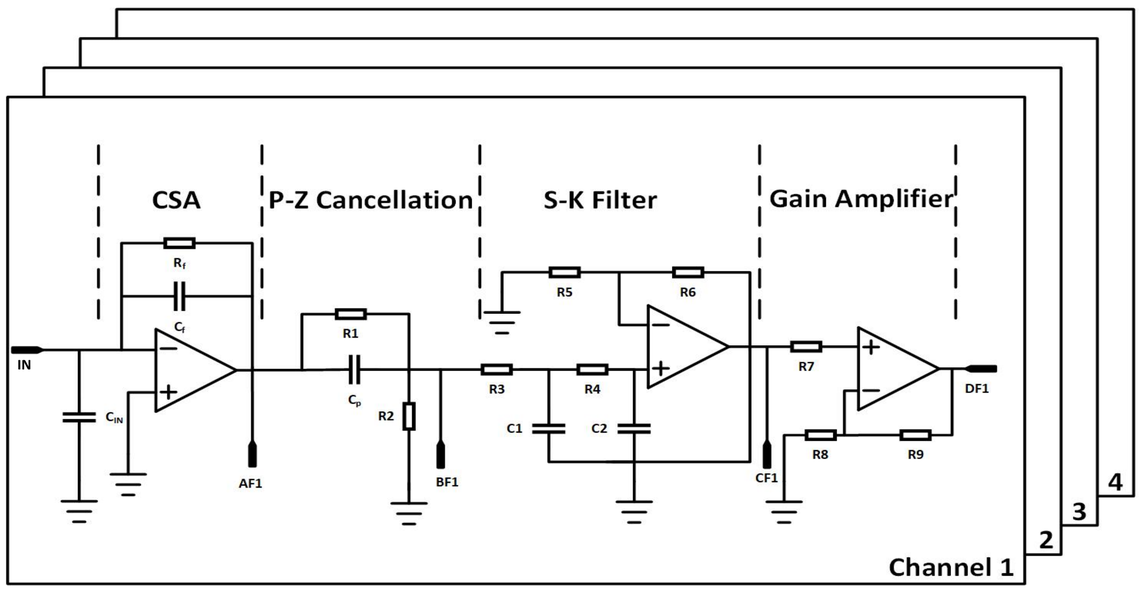

- Building Blocks:

HFEE has four channels and each channel consists of a charge-sensitive preamplifier, a pole-zero cancellation circuit, a S-K filter and a gain amplifier.
The size of each channel is about 150μm×210μm.

- CSA:
  - A single-end folded cascode amplifier is proposed in this CSA.
  - A p-type transistor is chosen as the input device because it has a lower flicker noise contribution compared to a n-type transistor.
  - The open-loop gain of the amplifier is about 62dB.
  - The shaping time can be adjusted to less than 660ns and the rise time (20% ~ 80%) is less than 30ns.
  - The total current consumes about 5mA.
  - Cf = 500fF

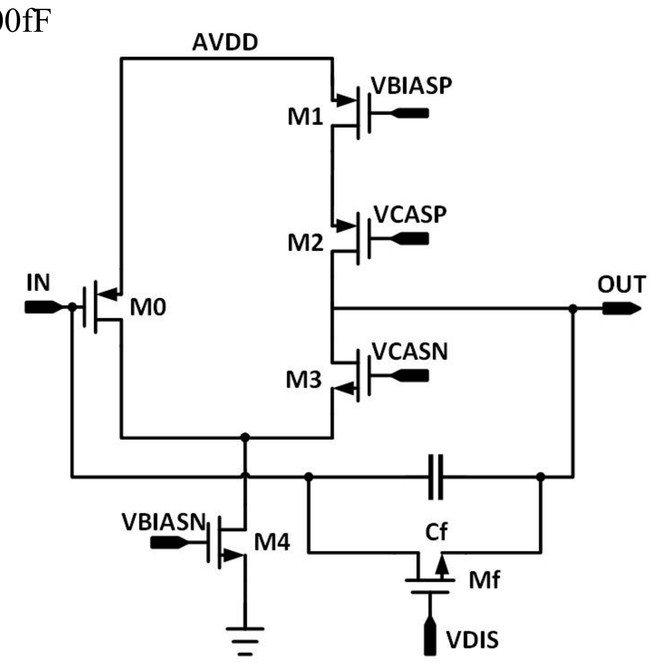

- The charge is injected through a capacitor of 500fF connected to the input PAD.
- The decay time can be adjusted by a bias voltage provided from off chip.
- The gain amplifier has a double magnification.
- The analog signal of each channel is driven off chip by a unity-gain buffer.

HFEE layout & photograph

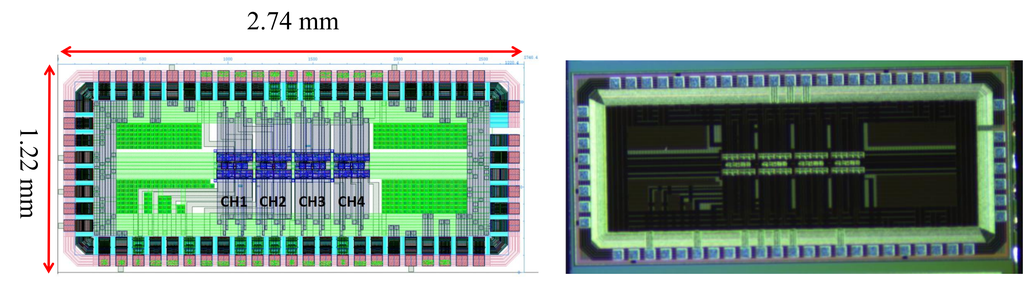

layout microphotograph

Preliminary test & Measurement Results

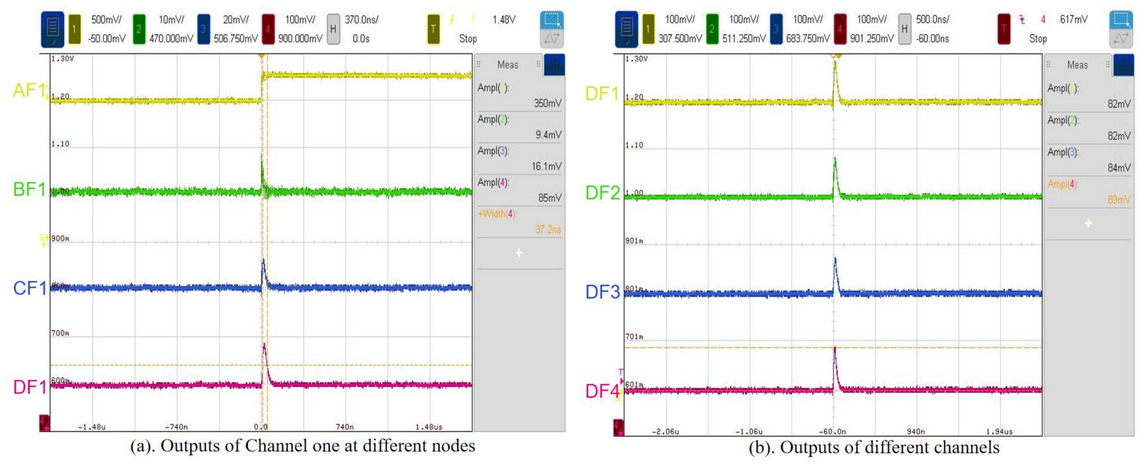

(a). Outputs of Channel one at different nodes (b). Outputs of different channels

- Each circuit module(a) and each channel(b) has the correct output function.
- The final FWHM is about 40ns.

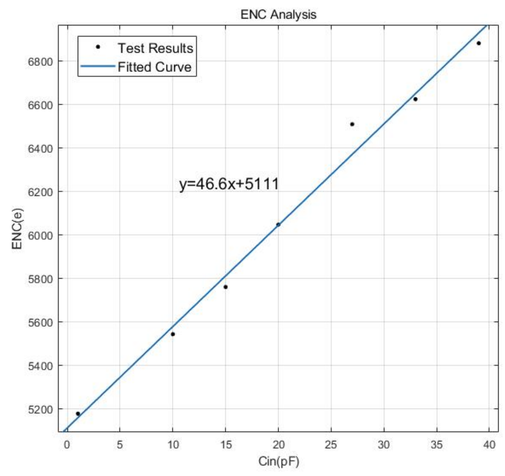

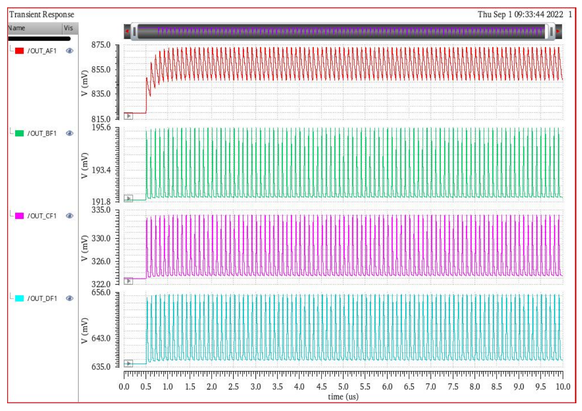

- ENC= $\frac{\sigma}{\frac{\mu}{Q_i}} = \frac{\sigma}{\mu} * \frac{C_{in} * V_{test}}{q}$ [Q_i : input charge, q: the elementary charge.]
- The equivalent noise charge of a channel is 5111e- rms with a detector capacitance of 0.5 pF.
- The hit rate is up to 10MHz.

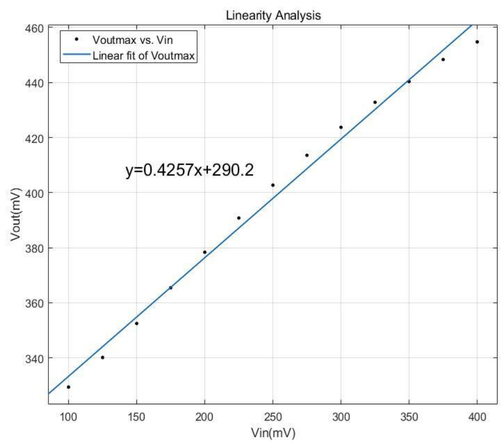

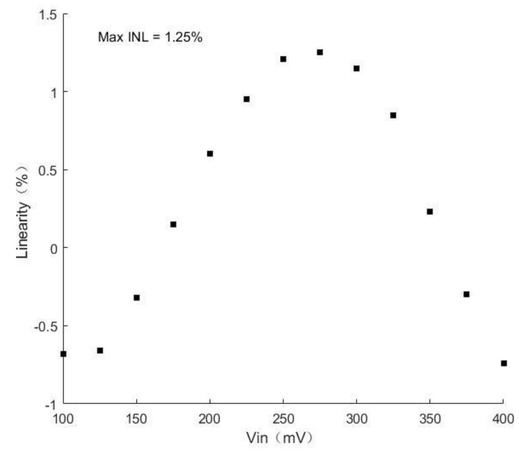

- The non-linearity is less than 1.25%.

Summary and Outlook

A High-density High-precision High-speed Front-End Electronic (HFEE) prototype with four channels, which has been manufactured in a standard CMOS 130 nm process, was successfully implemented and proven to function correctly. Measurement shows it has an equivalent noise charge of 5111e- + 46.6/pF with a detector capacitance of about 0.5 pF. Our team are striving a better performance gas detector with lower noise, more amount of channels and higher event rate processing capacity in the future.