SRF & NC RF Structures

State the art and future projects

F. Gerigk, CERN

Contents

01

SRF bulk Niobium

02

What next for SRF?

03

Travelling wave normal conducting

04

What next for NC structures?

From science to applications

Bulk Niobium cavities

Developed for high-energy physics, now widely used for applied physics. The origin of most of today's elliptical niobium cavities.

Courtesy: linearcollider.org

SRF Linear collider technology
(9-cell elliptical, 1.3 GHz)

Developed largely at DESY for the TESLA linear collider project, which then morphed into the International Linear Collider (ILC) study.
Based on 9-cell, 1.3 GHz elliptical cavities.

In 1990 the first TESLA Technology meeting took place in Cornell. The goal of increasing current SRF gradients (~5 MV/m) by a factor 5 was formulated and since then the SRF community has been pushing the gradient and worked on decreasing the price. The original **TTC forum (Tesla Technology Collaboration)** transformed into the most relevant and vibrant SRF technology forum worldwide.

While the ILC is not yet approved (15000 cavities for 500 GeV, center of mass energy), the ILC technology is already used for large scale accelerator projects. 2 examples:

European XFEL (Germany)
- 102 CMs with 8 cavities each.
- Nominal gradient: 23.6 MV/m pulsed (10 to 40 MV/m spread), $Q_0=1x10^{10}$
- 1.7 km of ILC type cavities.
- Construction 2010 - 2016. Design energy reached in 2018 (17.5 GeV).

LCLS-II (California, USA)
- CMs: 34 (LCLS-II) + 24 (LCLS-II-HE)
- 16 - 24 MV/m CW (limited by cryo-load)
- $Q_0 = 2.7x10^{10}$ (First operational machine using N-doping !)
- Going into operation in 2022.

Industry Produced 9-Cells with New Processes

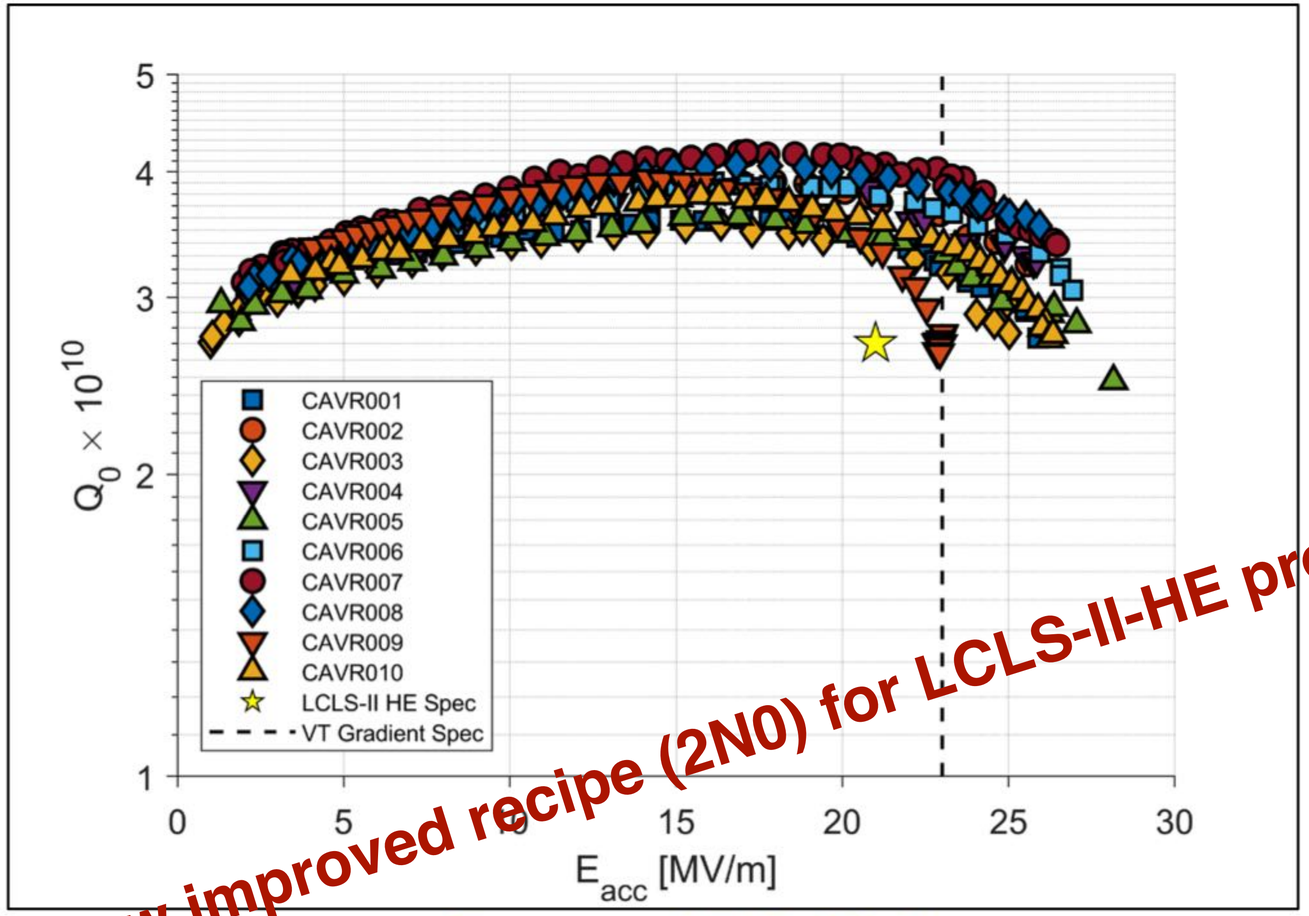

New improved recipe (2N0) for LCLS-II-HE production!

$\langle E_{acc} \rangle$ = 25.9 MV/m
$\langle Q_0 \rangle = 3.6 \times 10^{10}$

- LCLS-II-HE commissioned the construction of 10 9-cell cavities from industry, produced with the 2N0 recipe for use in a *verification* cryomodule
- The improved processes described here and many more were implemented in the production
- All of the cavities passed the HE specification!
- Improvement of >3 MV/m compared with the LCLS-II average!
- High number of 2N0 statistics motivates the decision to **use 2N0 in production**

Dan Gonella, TTC 2022

Mostly driven by HEP

While R&D on high gradient (left) and high-Q (right) continues..

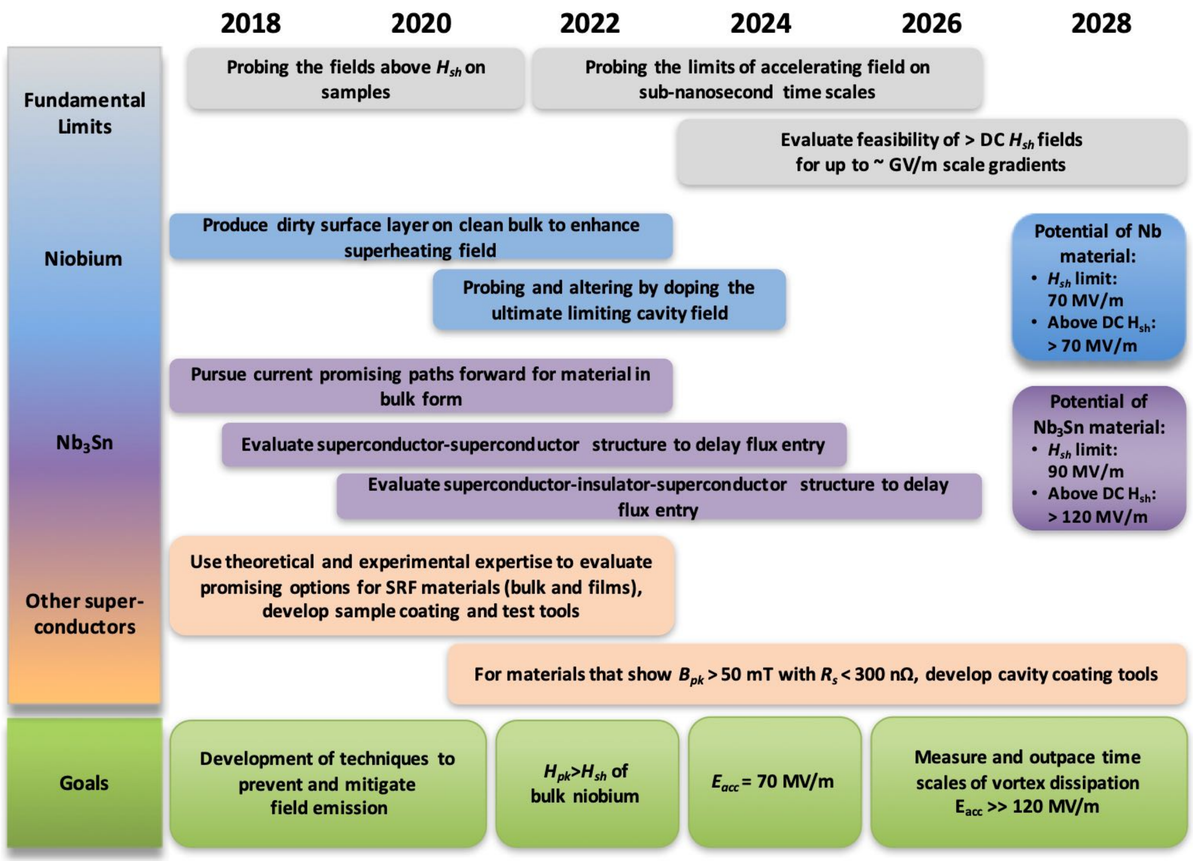

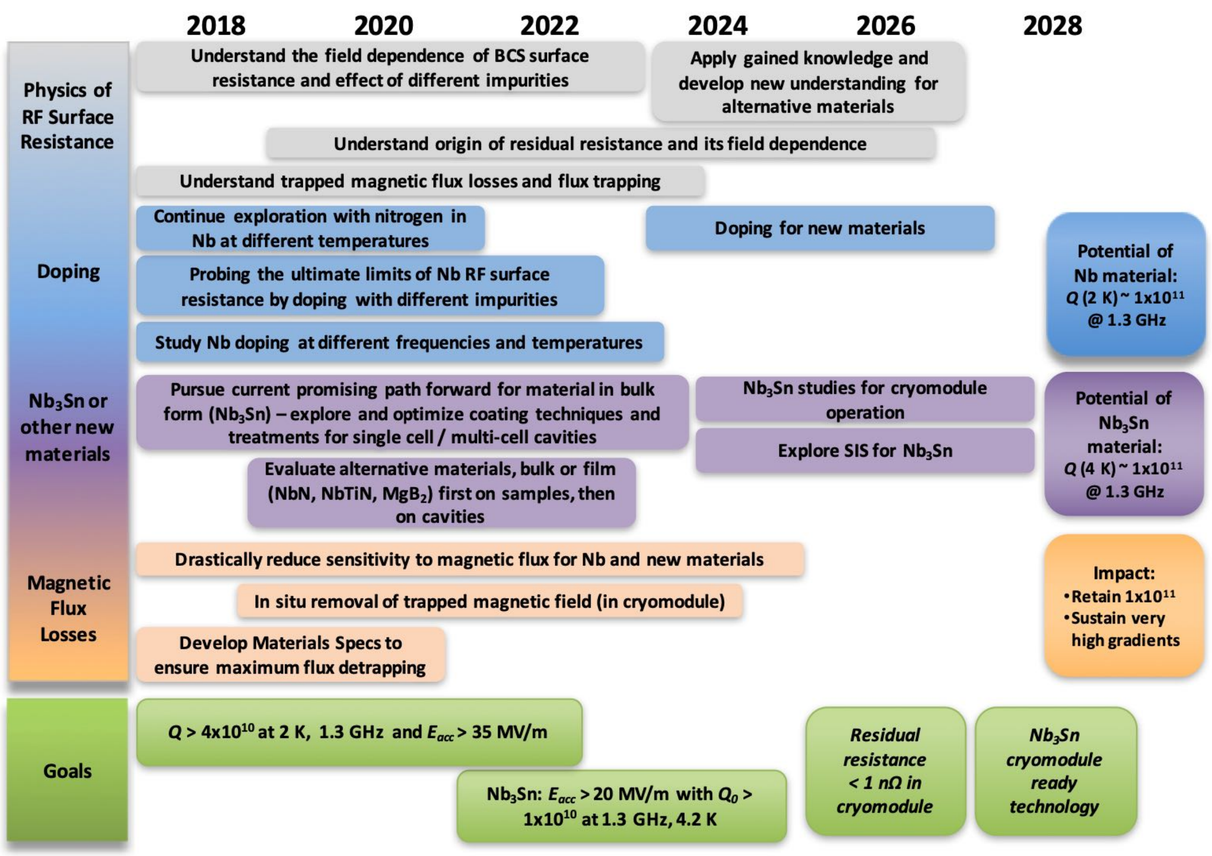

From: Radiofrequency Accelerator R&D Strategy Report: DOE HEP General Accelerator R&D RF Research Roadmap Workshop, 2017

And: Key directions for research and development of superconducting radio frequency cavities, Snowmass 2021

Technology transfer

...the SRF processes have been adapted to lower frequencies

Some examples:

1.3 GHz R&D

Processes, QA, material science, fabrication techniques, surface treatments, heat treatments, baking, doping, etc.

SNS, USA

15 years in operation:

- **800 MHz, elliptical**
- 33 b=0.61 6-cell cavities
- 48 b=0.81 6-cell cavities
- 10 - 16 MV/m, 16 MV/m assumed for power upgrade project

ESS, Sweden

Full operation in 2027:

- 26 double spoke cavities (**352 MHz**)
- 36 6-cell b=0.67 cavities (**704 MHz**, 16.7 MV/m)
- 84 5-cell b=0.86 cavities (**704 MHz**, 20 MV/m)

PIP-II, USA

Operation in 2029:

- **162.5 MHz, 325 MHz, 650 MHz**
- 8 half wave resonators
- 16 single spoke
- 35 double spoke
- 36 b= 0.61 5-cell ell.
- 24 b=0.92 5-cell ell.
- High-Q technology !

Technology transfer

... and non-elliptical shapes

A company is an association or collection of individuals, whether natural persons, legal persons, or a mixture of both. Company members share a common purpose and unite in order to focus their various talents and organize their collectively available skills

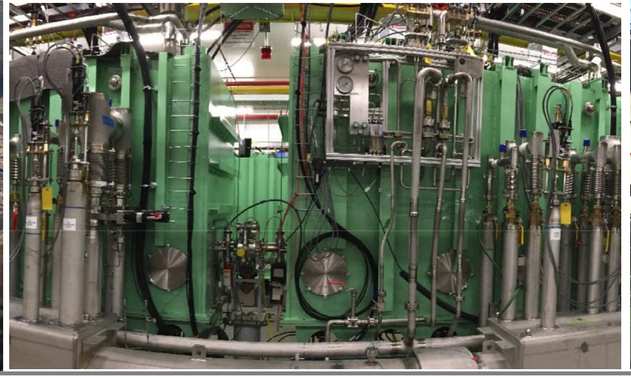

And many more...

RAON, Korea

Rare Isotope Science Project (RISP)

22 quarter-wave resonators, 81.25 MHz

106 half wave resonators, 162.5 MHz

69 single spoke cavities, 325 MHz

150 double spoke cavities, 325 MHz

Under construction

FRIB, USA

104 QWR, 80.5 MHz,

220 HWR, 322 MHz

In operation

ISAC-II, Canada

20 QWR, 106 MHz

20 QWR, 141.44 MHz

In operation

Triple spoke, ANL

QWR, TRIUMF

Quarter Wave Resonator

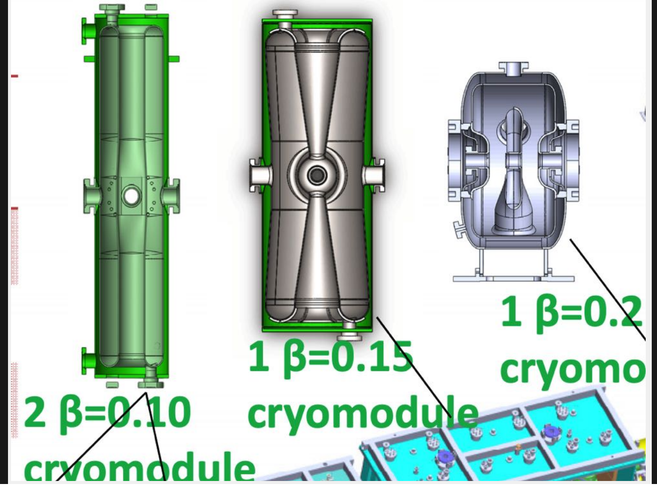

HWR, IMP/CAS

Half Wave Resonator

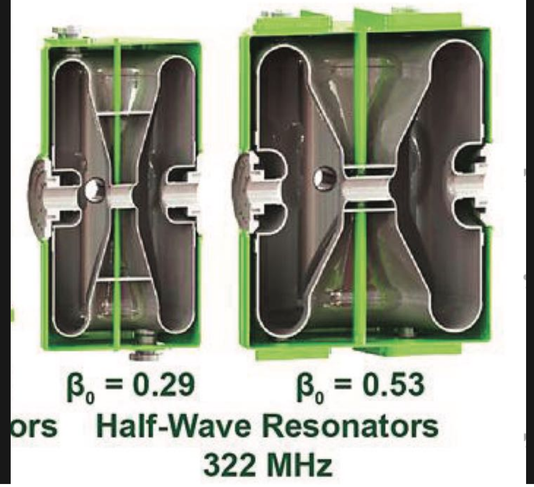

HWR, FRIB

Half Wave Resonator

b=0.92 elliptical, ESS

Balloon spoke, TRIUMF

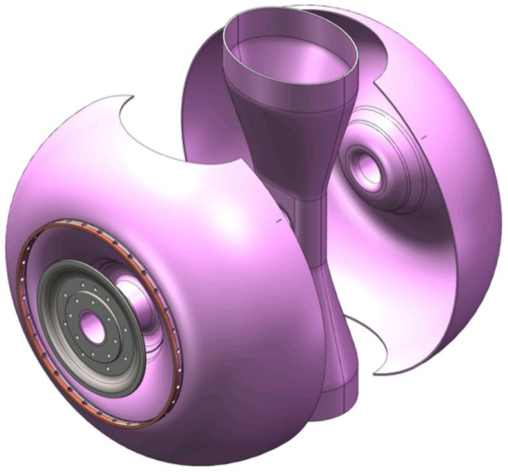

RFD, CERN

Radio Frequency Dipole Crab cavity

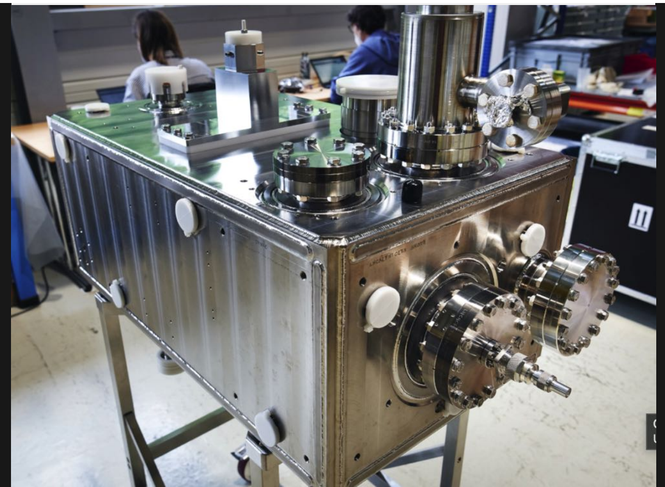

DQW, BNL/CERN

Double Quarter Wave Crab cavity

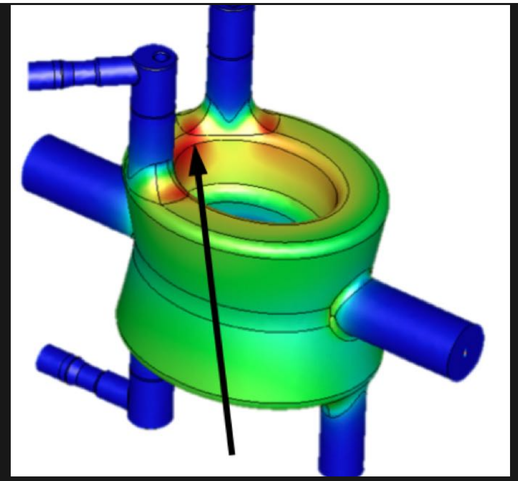

Even though there is still no approval for a SRF linear collider, its R&D effort has triggered a multitude of bulk Nb SRF accelerators.

6th Workshop
Energy for Sustainable Science
at Research Infrastructures

From science to applications

What next for SRF?

(Personal opinion)

- For linear machines (typically with moderate currents), high gradient and high quality factors will continue to drive bulk Nb, 1.3 GHz (and lower f) developments.
- The next big circular lepton collider (CEPC in China, or FCC at CERN) will operate with very high currents and need considerable RF voltage at 400 to 800 MHz. To work with O(1000) cavities, efficiency will be a main driver for R&D → high quality factors in high-current cavities. Electric consumption may become one of the main showstoppers in terms of cost and “acceptability” by society.
- See e.g: K. Bloom et al., “Climate Impacts of Particle Physics”, arXiv: 2203.12389v1, 23 March 2022.

Three main areas

To boost the performance of SRF cavities

Surface engineering

Engineering of the upper nanometers of bulk SRF cavities to tailor the performance for **high Q, or high-gradient or both**. E.g. doping with nitrogen, oxygen or others; heat treatments, fast cool-down, etc.

A15 materials

Operation with high Q at higher temperatures (~20 K and maybe higher) thereby reducing considerably the cryogenic consumption. Nb_3Sn on Nb, Nb_3Sn on Cu, Si_3Vn on Cu, MgB_2…

Multilayers

Superconductor + Insulator + Superconductor + Insulator + Nb: Suppression of vortexes, much higher magnetic surface fields, promise of much higher gradients and higher Q values. Option to operate at 4.2 K instead of at 2 K

A. Gurevich, Appl. Phys. Lett. 88, 012511 (2006)

Why do we like Nb on Cu?

- At cryogenic temperatures copper is a much better head conductor than Niobium, which makes more quench resistant.
- It is also mechanically more stable and cheaper to produce than Niobium.
- Combining the thermo-mechanical characteristics of copper with a tunable superconducting layer seems like a winning combination, provided that you can make a near-perfect film.

See also: S. Calatroni, “20 Years of experience with the Nb/Cu technology for superconducting cavities and perspectives for future developments”. Proceedings of the 12th International Workshop on RF Superconductivity, 2006.

In order to have multi-layers, or layers with A15 materials, one should start with one perfect film..

CERN is working on Nb on Cu films and is trying to assess the fundamental limits. Past cavities were usually performing much below their theoretical potential, but that has changed recently.

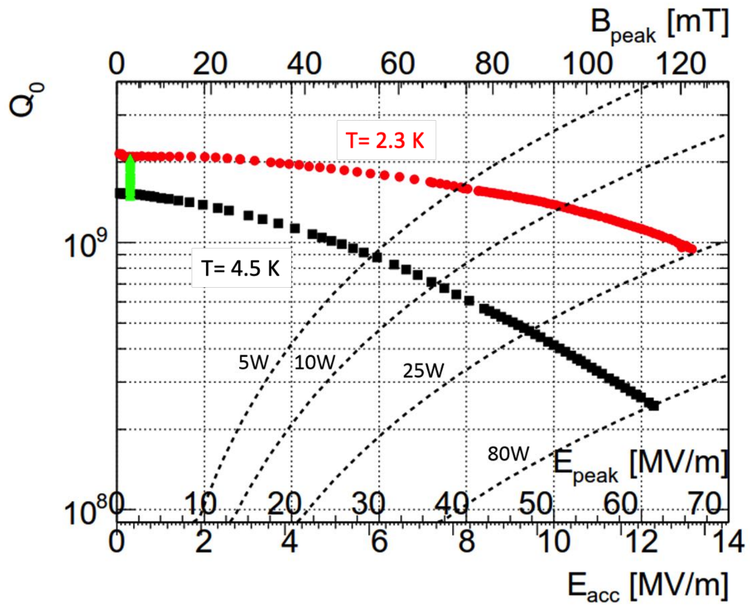

Seamless HIE-ISOLDE Nb/Cu QWR cavity, 100 MHz

In 2017, CERN reached record results for Nb/Cu technology using a “seamless substrate”

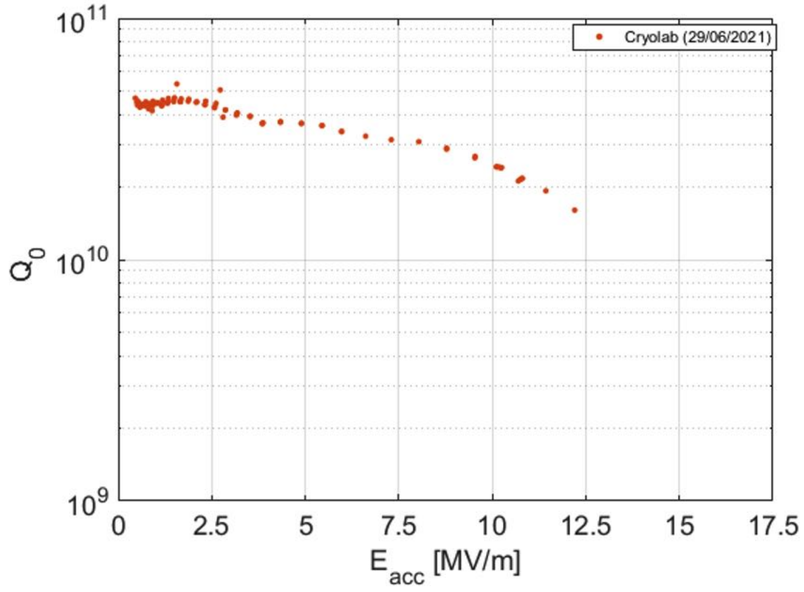

Seamless 1.3 GHz Nb/Cu cavity

CERN machined a 1.3 GHz single-cell cavity out of bulk copper and applied a Nb film. The resulting Q0 values (1.8 K) are comparable to bulk Nb performance. Major performance step!

How to make seamless cavities?

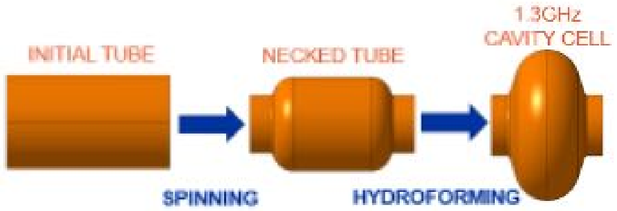

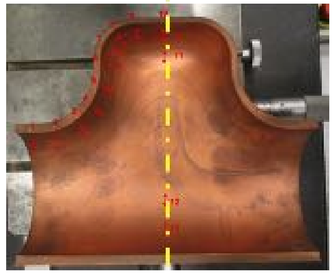

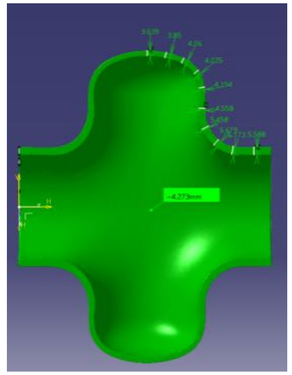

Hydroforming

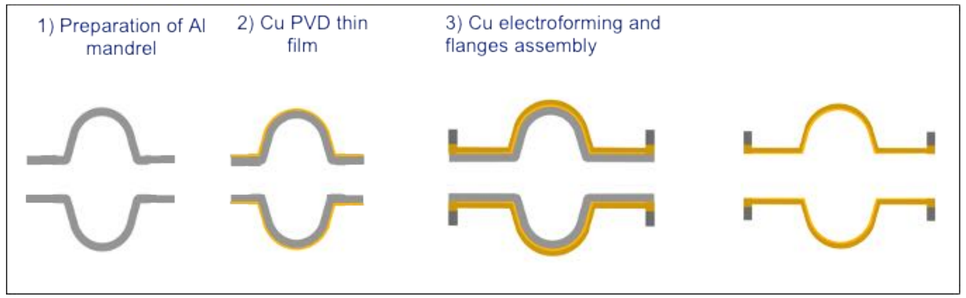

Copper electroforming

Electro-Hydraulic forming, Nb and Cu

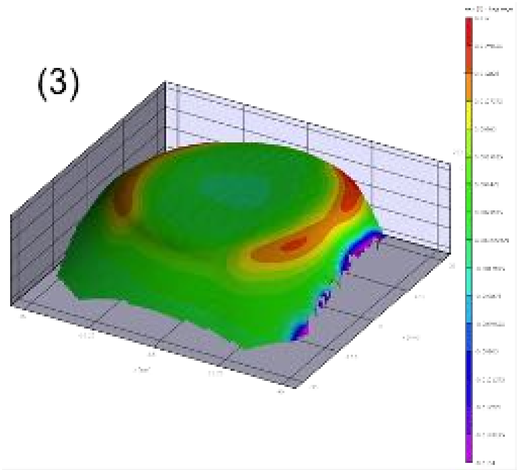

Another CERN development that just started (aiming at FCC)

SWELL, Slotted Waveguide ELLiptical cavity

- A 600 MHz elliptical cavity with 4 slots for strong higher order mode damping.
- Fabrication: machining 4 quadrants out of bulk Copper, coating of quadrants, and clamping.
- Cooling: He channels are drilled into the bulk material: no more Helium tank!
- The “seams” between the quadrants are in the lowest magnetic field area at the end of the slots. No performance degradation expected.
- This cavity could replace most of the other cavities presently foreseen for the FCC-ee.
- Prototyping at 1.3 GHz started.

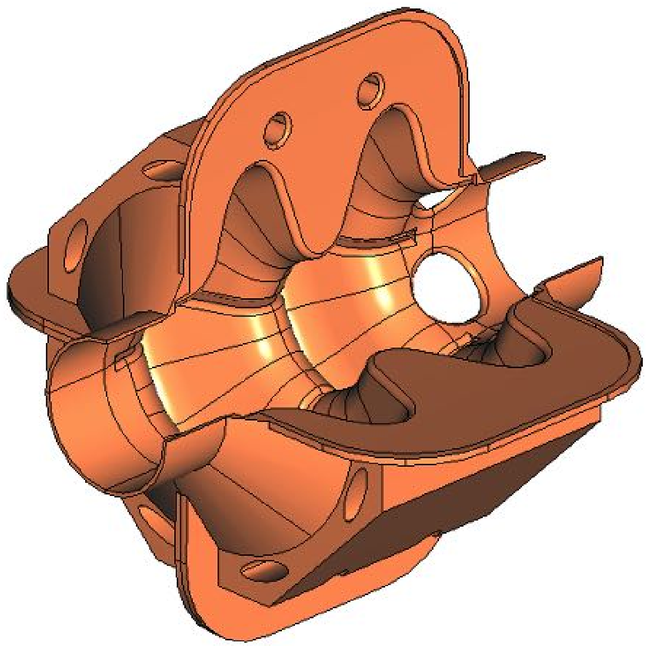

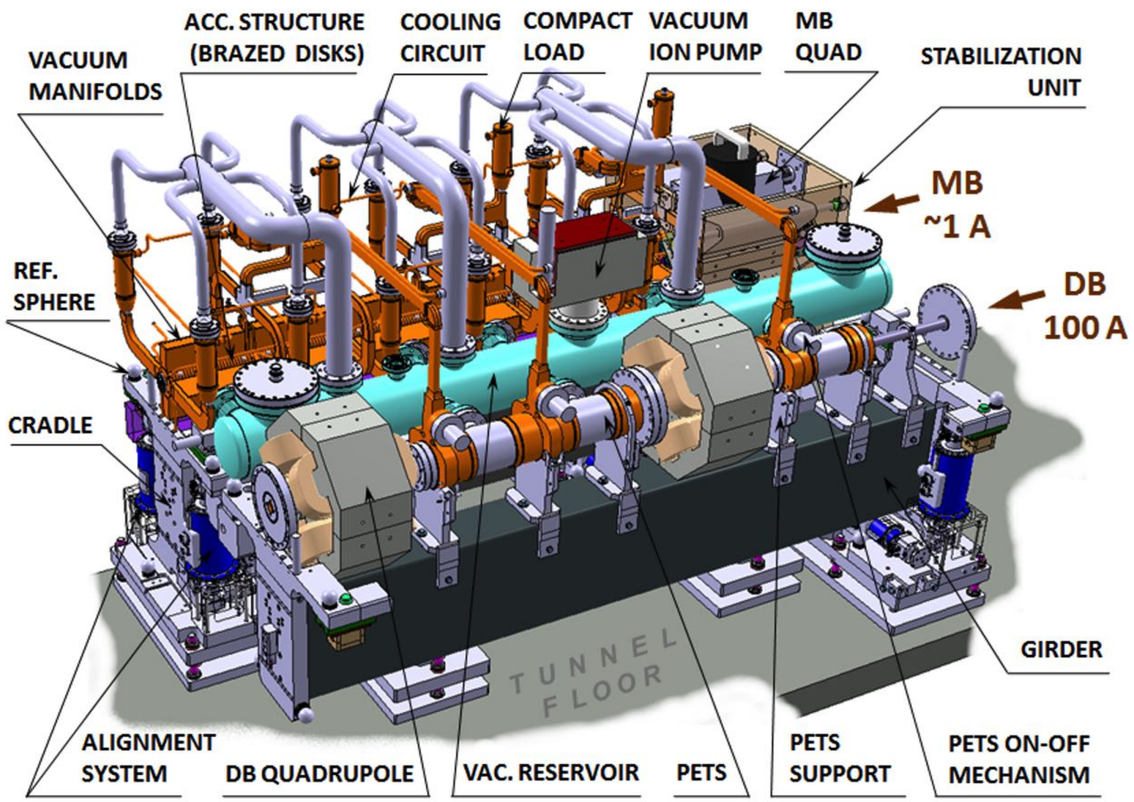

From science to applications

Travelling wave normalconducting structures

Developed for compact linear colliders. A technology driver for applied sciences.

Courtesy (this and many other pictures):
N. Catalan Lasheras, W. Wuensch, CERN

NC linear collider technology

Developed largely at SLAC and CERN with the goal of having > 100 MV/m accelerating gradients

While no NC linear collider is yet approved its technology is already used for large scale accelerator projects.
2 examples:

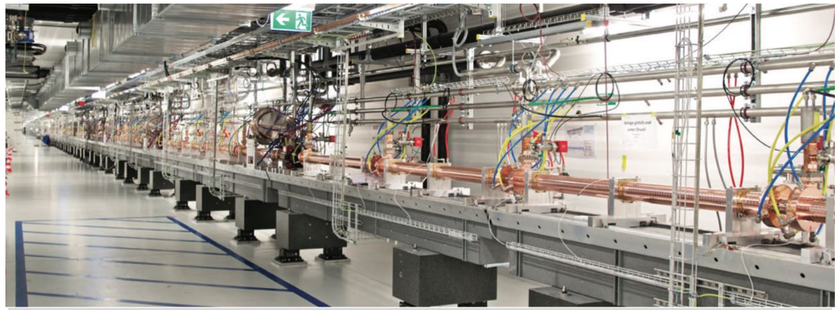

SwissFEL (Switzerland)
- 26 C-band modules (6 GHz).
- 5.8 GeV, with 100 Hz repetition rate.
- Electron bunch charge 10 - 200 pC.
- In operation

PAL-XFEL (Korea)
- 31 S-band modules (2.8 GHz).
- 10 GeV, with 60 Hz repetition rate.
- Electron bunch charge 20 - 200 pC.

Upcoming X-band projects

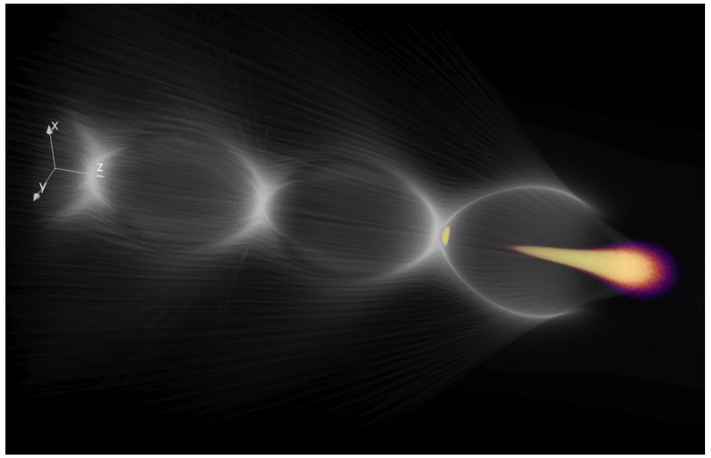

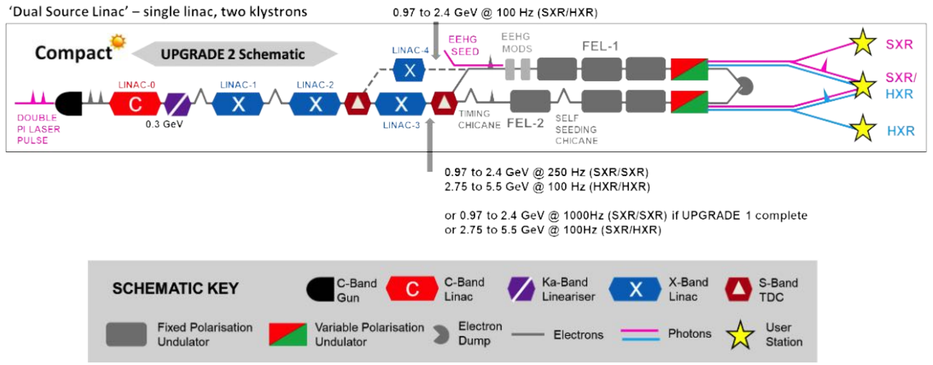

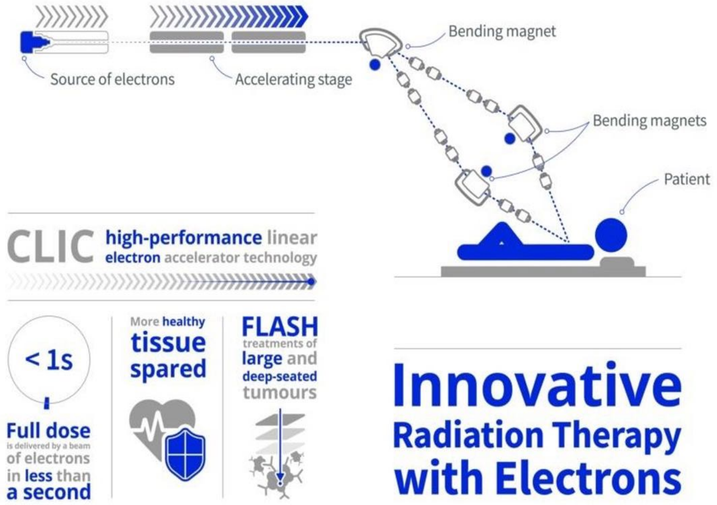

Europraxia, INFN-LNF

Laser and electron-beam driven plasma Wakefield accelerator. Electron X-band linac with:

12 GHz, > 60 MV/m gradient,

1 GeV electron beam linac

CompactLight

EU design study for a 5.5 GeV XFEL

Based on X-band structures

DEFT

Design for a FLASH therapy facility using CLIC X-band high-gradient structures.

Collaboration with Lausanne University hospital (CHUV)

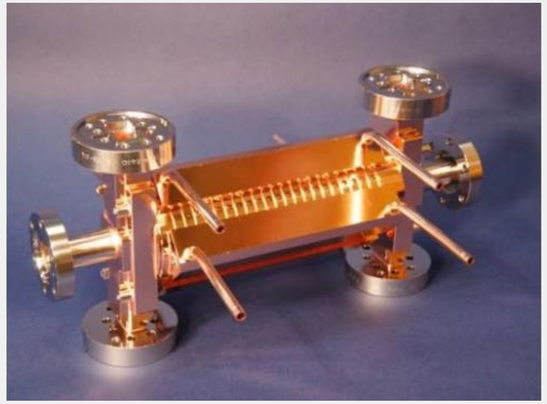

CLIC X-band copper structure

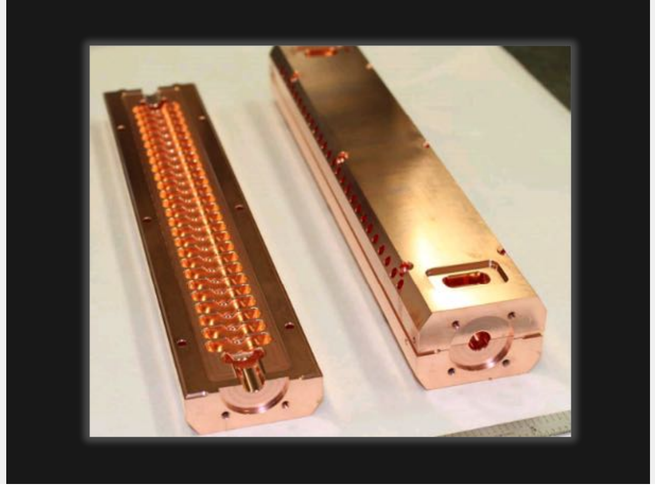

Diamond-tool Ultraprecision Machining

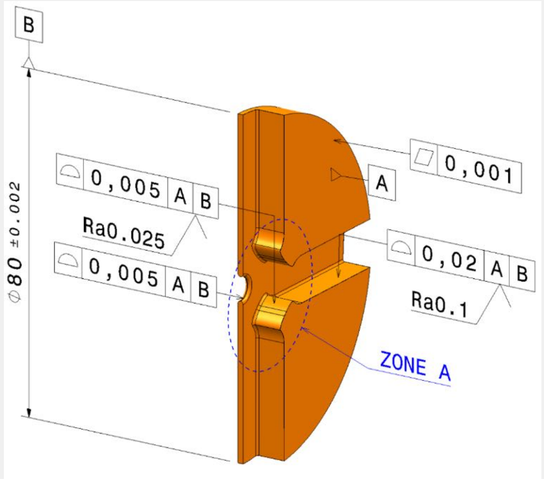

Challenging tolerances

Shape accuracies: 0.005 mm

Flatness: 0.001 mm

Surface roughness 0.025 um

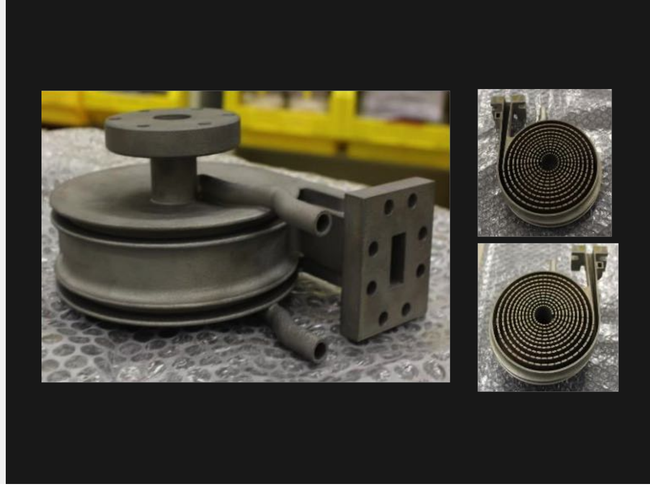

3D printing In titanium

- For CLIC more than 30 prototypes were made at 12 GHz.
- 20 structures were tested and reached 100 - 120 MV/m.
- Variations and further prototypes by collaborators: Lancaster, SLAC, SINAP, Eindhoven, KEK, ..

S, X-band technology developments

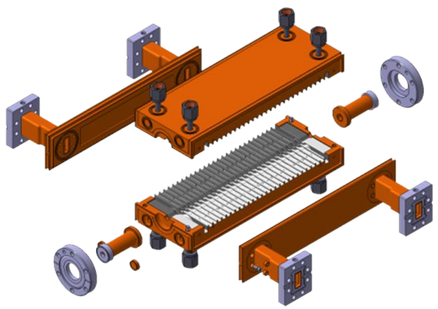

Integrated structures Made of EB-welded halves

- EB-welds far from RF area, hard copper.
- Fewer pieces.
- Prototyping ongoing

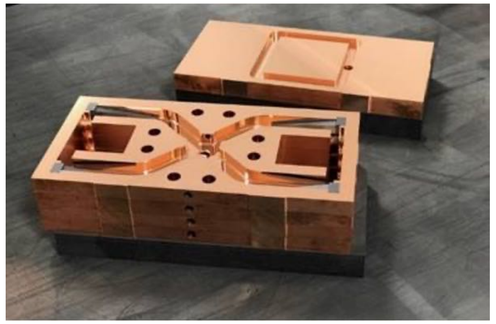

Integrated rectangular discs

- Bent waveguide design
- Silicon carbide loads
- Prototyping ongoing

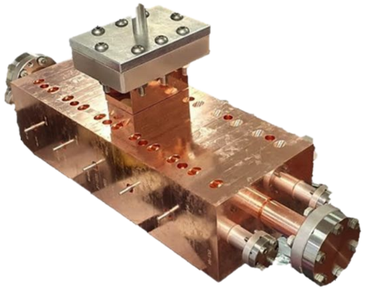

Probe structure

- S-band structure for medical therapy
- Built by Lancaster with CERN procedures.
- No silicon carbide.

Cryogenically cooled copper or cavities with HTS films

- Reduction of surface resistance by cooling, possibly with high-temperature superconducting films can reduce the power consumption of travelling wave colliders.

Conclusions

Even though no Linear Collider has been built, the R&D has driven progress on superconducting and normal conducting accelerating structures.

- Superconducting modules are already available as “turn-key” products from industry.
- The need to reduce energy consumption will continue to drive R&D for lower surface resistance and higher quality factors. Nb surfaces will be engineered for operation at certain gradients.
- Thin film SC cavities have a as yet untapped potential and multilayers may provide a major step in performance. Key technologies: seamless cavity substrates (hydro forming, electro hydro forming, bulk machining, electrodeposition…)
- Normalconducting X-band structures are used more and more in applied sciences and medical facilities.
- Present R&D focuses on simplifying construction and increasing efficiency (cryogenically cooled copper or cooled copper with high-temperature superconducting films).

References, SRF

1. V. Zvyagintsev et al., Results and Experience with single cavity tests of medium beta superconducting quarter wave resonators at TRIUMF, EPAC 2006, Edinburgh
2. R. Laxdal et al., ISAC-II: Status of the 20 MV upgrade, SRF 2009, Berlin
3. ILC Technical Design Report, Volume 3.II: Accelerator Baseline Design, 2013
4. G. Devanz et al., ESS elliptical cavities and cryomodules, SRF 2013, Paris
5. Radiofrequency Accelerator R&D Strategy Report: DOE HEP General Accelerator R&D RF Research Roadmap Workshop, March 8-9, 2017
6. J. Branlard, XFEL commissioning and operation, TTC 2018, Milan
7. W. Venturini, Thin film research: CERN experience and possible future applications, TTC 2018, Milan
8. C. Compton, FRIB Cavity and Cryomodule Production, LINAC 2018, Beijing
9. M. Kwon, Technical Challenges for SRF of RAON, TTC 2020, Geneva
10. W. YuQin, The conditioning and operation of HWR Cryomodules for C-ADS, SRF 2017
11. E. Kako, P. Pierini, CE Reece, TESLA's High-Gradient March, CERN Courier Nov/Dec 2020
12. European Strategy for Particle Physics — Accelerator R&D Roadmap
13. Dan Gonella, LCLS-II-HE High Q0 & Gradient R&D Program, First CM Test Results and CM Plasma Processing Results, TTC 2022
14. Key directions for research and development of superconducting radio frequency cavities, FERMILAB-PUB-22-241-SQMS-TD, April 5, 2022

References, NCRF

1. H.-S. Kang et al., Status of the PAL-XFEL, LINAC 2016, East Lansing.
2. P. Craievich, SwissFEL linac commissioning status, current performance and future plans, LINAC 2018, Beijing.
3. N. Catalan Lasheras, X-Band Technology: Latest Development and future applications. Seminar.
4. Europraxia, conceptual design report
5. W. Wuensch, The X-band and High-gradient landscape, CLIC project meeting, 2021, Geneva