WU#1 – Powering accelerators from local PV renewable energy

Concept:

- Install PV panels near accelerators' "wasted land";
- Connect them to the main power converters supplying accelerator magnets or RF amplifiers, using high efficiency DC/DC converters;
- AFE's can redirect the PV energy back to the AC grid when accelerator not running;
- Up to 15-20% renewable energy utilization possible with no transmission losses and high conversion efficiency;
- Lower capital cost & lower payback time;

Objectives:

- Feasibility study for ESS case: up-to 2MW installed PV injected into the Linac RF klystron modulators;
- MSc thesis with Lund University (starting Feb. 2022);

Conventional scheme:
PV injected into the AC grid (4 stages)

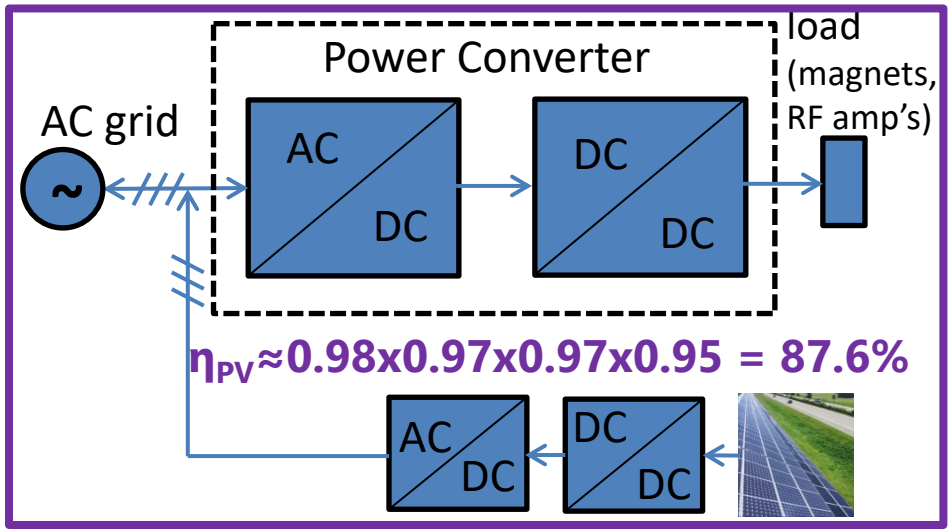

$\eta_{PV} \approx 0.98 \times 0.97 \times 0.97 \times 0.95 = 87.6\%$

New scheme:
PV injected into power converters (2 stages)

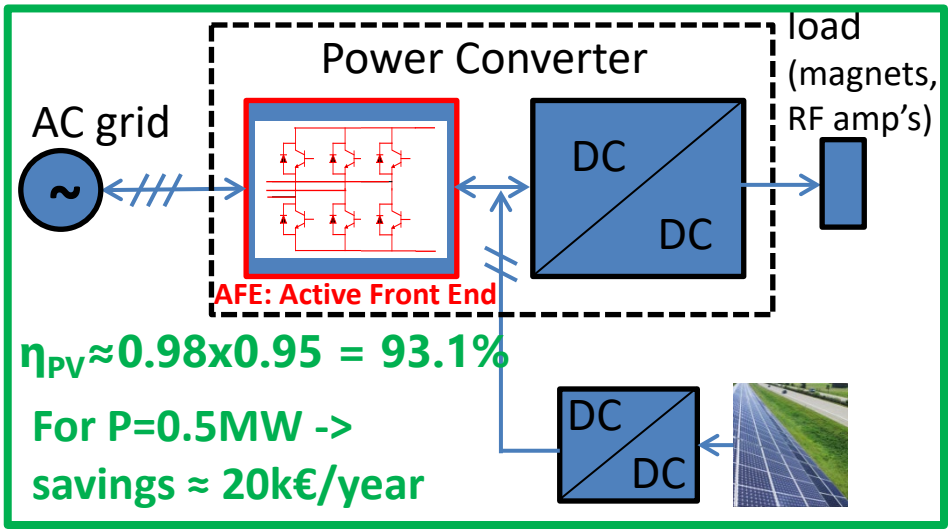

$\eta_{PV} \approx 0.98 \times 0.95 = 93.1\%$

For P=0.5MW ->
savings ≈ 20k€/year

WU#1 – Powering accelerators from local PV renewable energy

But… Is there enough sun in Sweden to power (partially) an accelerator ?

PERFORMANCE OF GRID-CONNECTED PV: RESULTS — PV output

Summary

Provided inputs:	
Location [Lat/Lon]:	55.735,13.253
Horizon:	Calculated
Database used:	PVGIS-SARAH2
PV technology:	Crystalline silicon
PV installed [kWp]:	10000
System loss [%]:	5

Simulation outputs:	
Slope angle [°]:	40 (opt)
Azimuth angle [°]:	2 (opt)
Yearly PV energy production [kWh]:	11162309.12
Yearly in-plane irradiation [kWh/m²]:	1251.02
Year-to-year variability [kWh]:	488195.41
Changes in output due to:	
Angle of incidence [%]:	-3.02
Spectral effects [%]:	1.51
Temperature and low irradiance [%]:	-4.59
Total loss [%]:	-10.77

Monthly energy output from fix-angle PV system

Yearly electrical PV power yield Lund: 11.2 GWh @10MW installed PV capacity

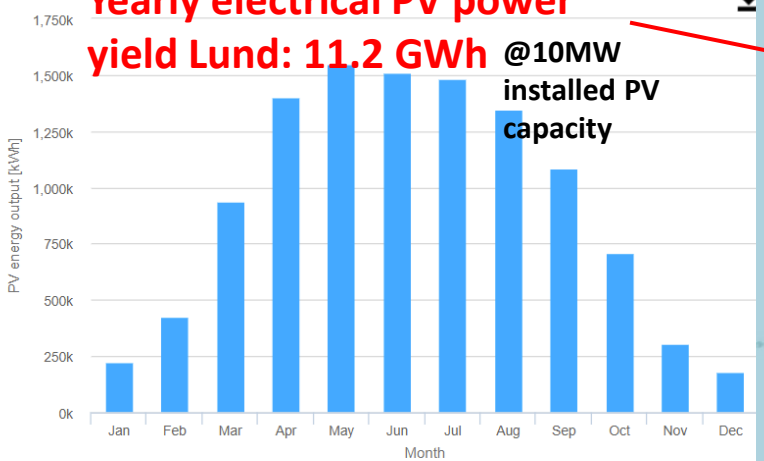

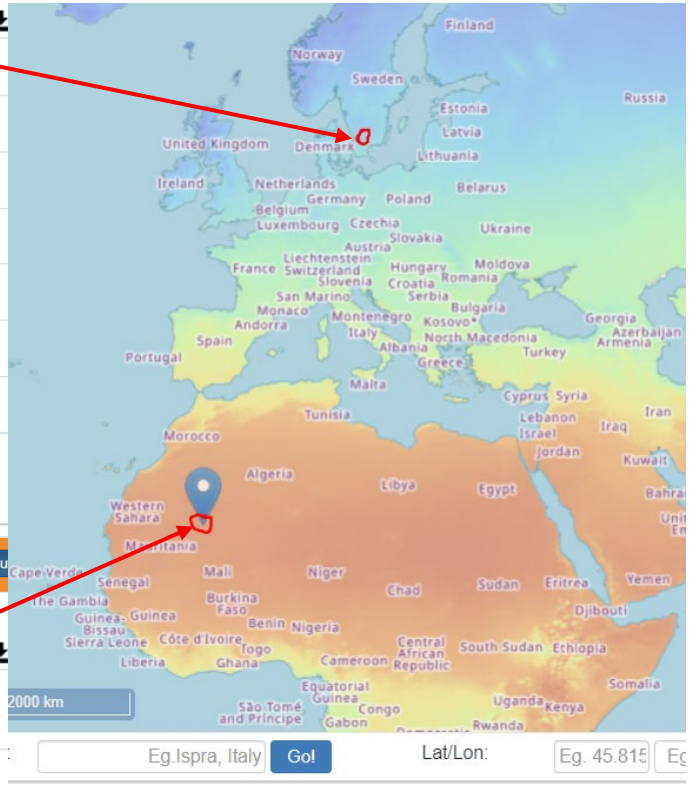

PERFORMANCE OF GRID-CONNECTED PV: RESULTS — PV outpu

Summary

Provided inputs:	
Location [Lat/Lon]:	20.081,-3.412
Horizon:	Calculated
Database used:	PVGIS-SARAH2
PV technology:	Crystalline silicon
PV installed [kWp]:	10000
System loss [%]:	5

Simulation outputs:	
Slope angle [°]:	21 (opt)
Azimuth angle [°]:	-2 (opt)
Yearly PV energy production [kWh]:	20497671.02
Yearly in-plane irradiation [kWh/m²]:	2497.46
Year-to-year variability [kWh]:	394983.91
Changes in output due to:	
Angle of incidence [%]:	-2.44
Spectral effects [%]:	-0.2
Temperature and low irradiance [%]:	-11.27
Total loss [%]:	-17.93

Monthly energy output from fix-angle PV system

Yearly electrical PV power yield Sahara: 20.5 GWh @10MW installed PV capacity

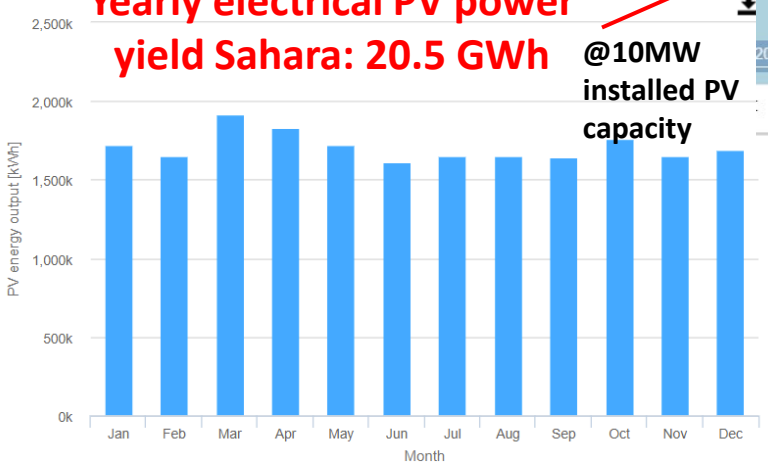

- **<u>In Lund</u>**, there is an electrical PV potential of **<u>54% of Sahara</u>** desert, one of the higher irradiated areas in the planet !

WU#1 – Powering accelerators from local PV renewable energy

How much does that PV energy represent wrt ESS accelerator annual consumption?

PERFORMANCE OF GRID-CONNECTED PV: RESULTS — PV output

Summary

Provided inputs:	
Location [Lat/Lon]:	55.735,13.253
Horizon:	Calculated
Database used:	PVGIS-SARAH2
PV technology:	Crystalline silicon
PV installed [kWp]:	10000
System loss [%]:	5

Simulation outputs:	
Slope angle [°]:	40 (opt)
Azimuth angle [°]:	2 (opt)
Yearly PV energy production [kWh]:	11162309.12
Yearly in-plane irradiation [kWh/m²]:	1251.02
Year-to-year variability [kWh]:	488195.41
Changes in output due to:	
Angle of incidence [%]:	-3.02
Spectral effects [%]:	1.51
Temperature and low irradiance [%]:	-4.59
Total loss [%]:	-10.77

Monthly energy output from fix-angle PV system

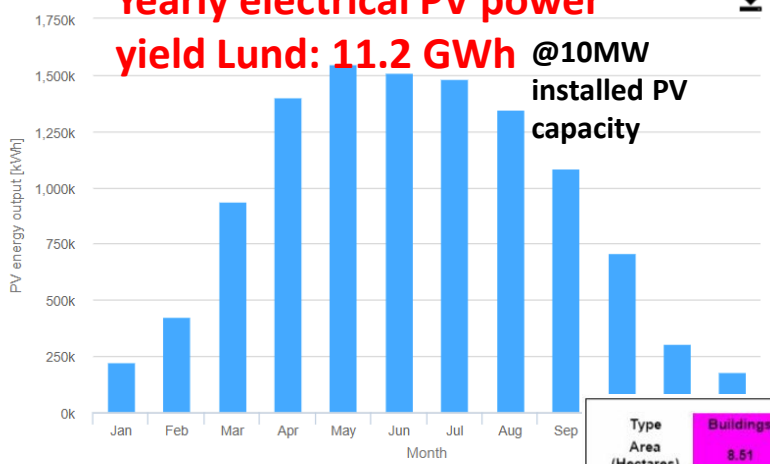

Yearly electrical PV power yield Lund: 11.2 GWh **@10MW installed PV capacity**

10MW installed PV capacity
- Land area: ~18 hectares

Areas in **"blue"**
(i.e. outer area of ESS site):
~ 18.5 hectares

Type	Buildings	Ring	Inner	Outer	Total
Area (Hectares)	8.51	5.14	9.06	18.47	41.19

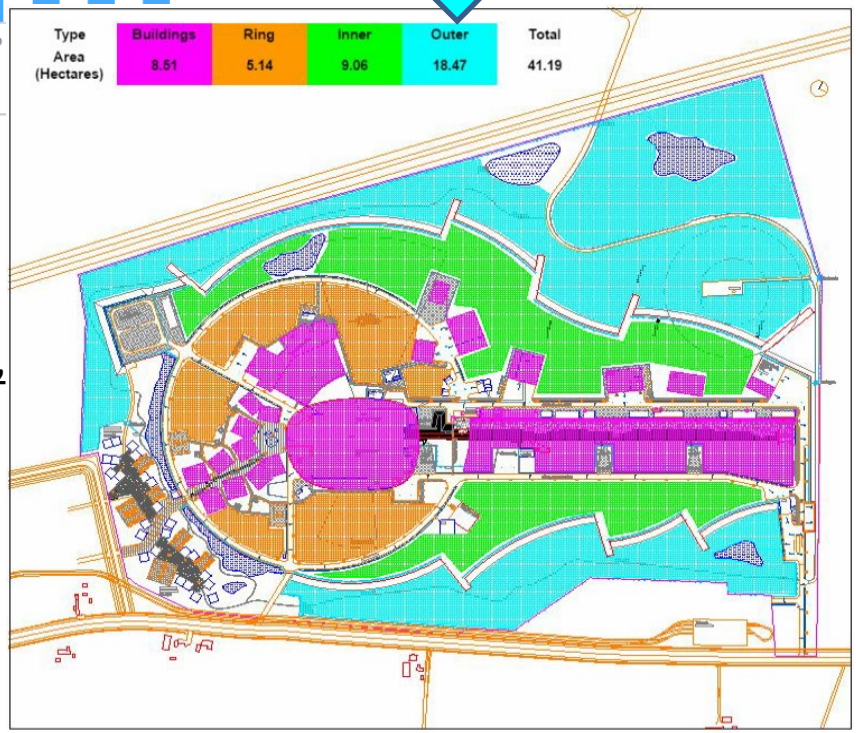

- By its completion, the ESS accelerator yearly consumption is: ~12MW*5'500h = 66GWh;

- **<u>CONCLUSION: With 10MW PV installed capacity, the ESS accelerator can be powered up-to 17% from local PV renewable energy</u>**

Note: The AFE's of the klystron modulators can operate ~8'500h/year, i.e. injecting PV power back into the AC line when the accelerator is shutdown (i.e. for ~3'000 h/year);

WU#2 – Grid friendly accelerator power converters

Conventional scheme: centralized power quality compensators

- Expensive;
- Limited performance

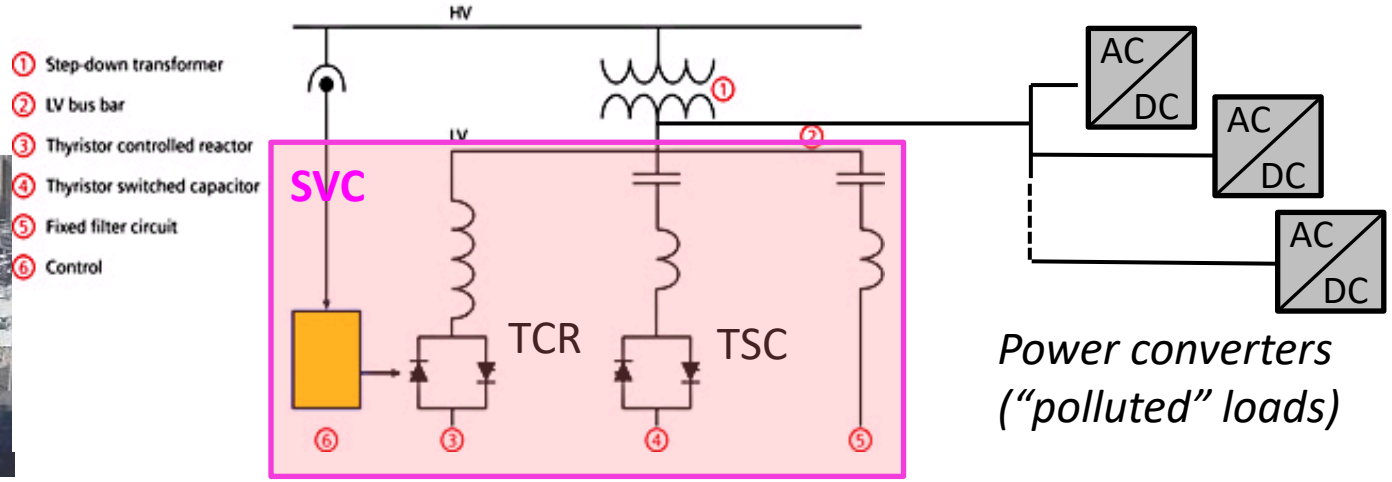

New scheme: active compensators (AFE's) integrated within the power converters

- No external SVC's required: cost savings;
- Excellent performance (unitary power factor, very low current harmonic distortion: <3%);
- Higher efficiency (no harmonics in the power line between loads and compensators);
- Power reversal capability (superconducting magnets)

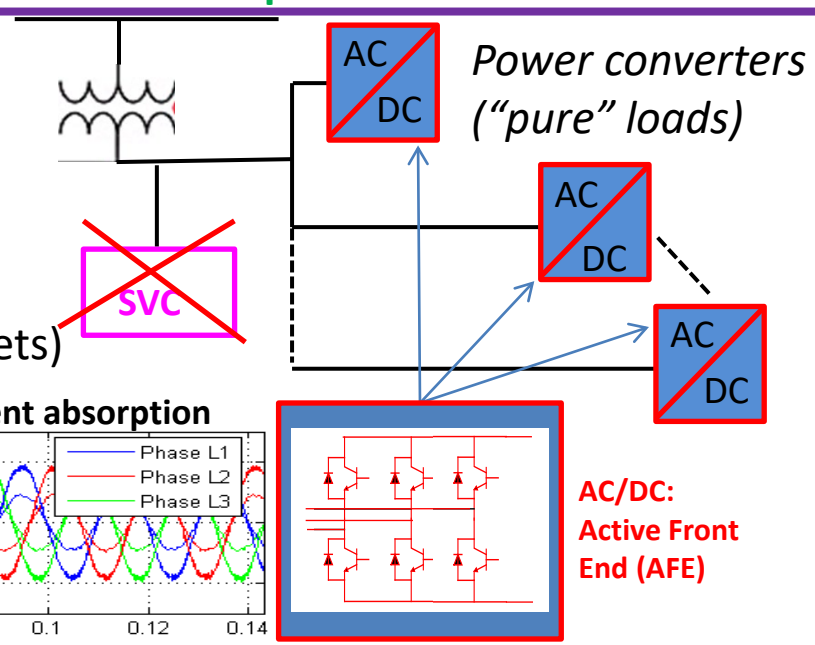

Objectives:

- Comparative study between conventional & new compensators