MICE CM29
Engineering Summary

- Cooling channel moving platforms – Norbert
- Floor Beams and plates – Andy L
- Magnetic modelling – Mike
- RF Engineering – Andy M
- LH2 system – Matt
- EMR Integration – Ruslan
- Overall integration – Jason
- Discussions, points raised and actions - All

Andy Nichols, STFC, 18th February 2011

Moving platforms

- *Concentrating on platforms for AFC (Step IV)*
- *DL Staff, led by Norbert now well advanced*
- *Have got past PowerPoint Engineering stage, great news!*
- *Design is well advanced*
- *Will be ready for review by TB very soon*
- *Possibility to deliver first platform in Q3, 2011, comfortable for Step IV*

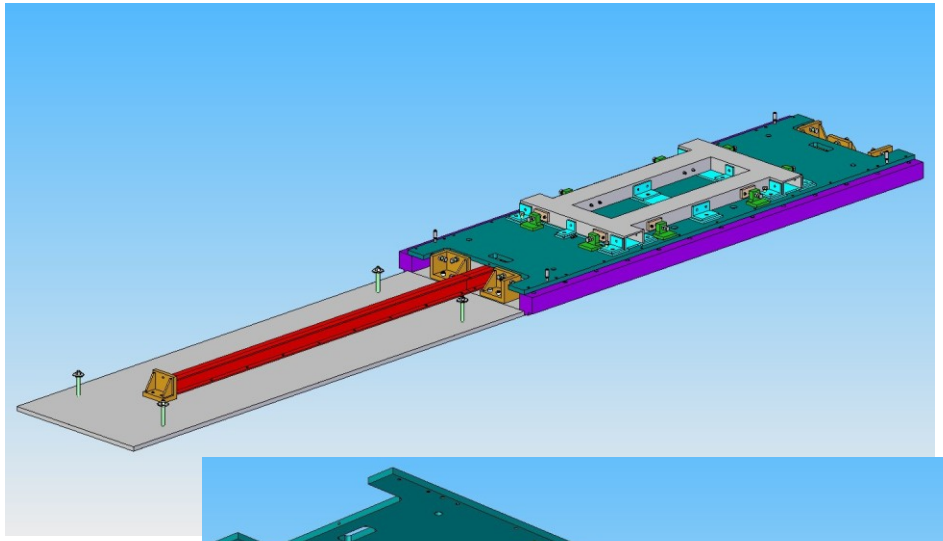

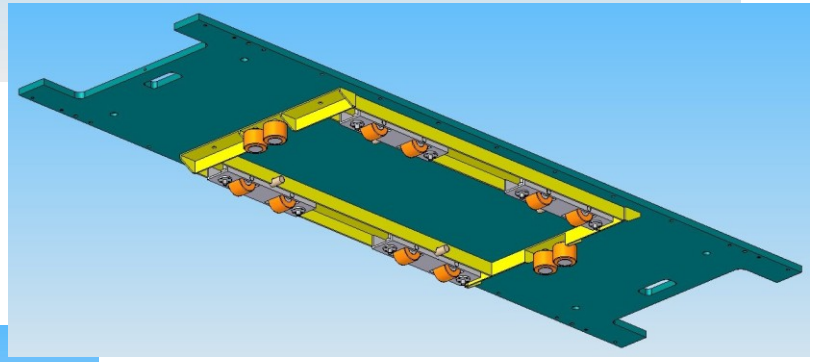

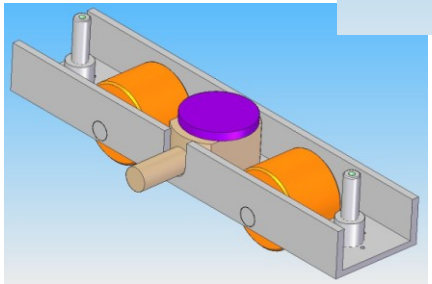

Floor/beams

- *Again, real design work in progress*
- *Important to work out what the floor looks like now we go straight to Step IV*
- *Also identifying interfaces with subsystems, for example:*
- *RFCC mounting pads need to move inwards*
- *Have also revised mechanical forces study*
- *Also nearly ready to report to TB*

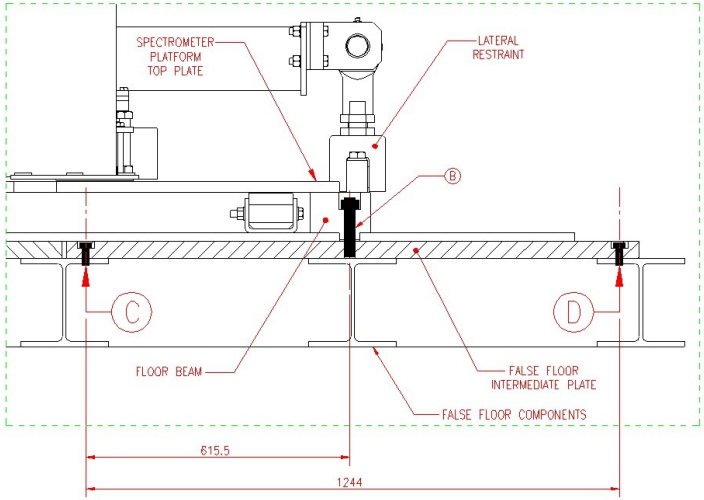

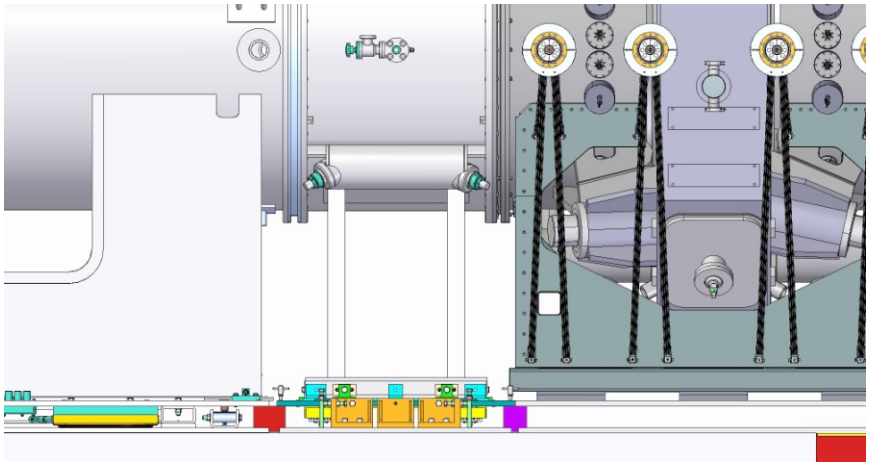

Magnetic Simulation

- *More complicated than any of us thought!*
- *Present shielding design will not contain field to limit of 5 gauss*
- *But suspect only at Step VI solenoid mode*
- *'Second opinion' report submitted by vector Fields:*
  - *No practical shielding solutions have presented themselves*
  - *Need to refine the study, with explicit conditions for each MICE step, and pass to VF the practical constraints*
  - *Also measure the magnetic properties of our shield material, amazingly this was never done*
- *But we're understanding it, that's the main thing*

RF Engineering

- *Major effort to increase project staff at DL/RAL*
- *Has really paid off*
- *Design work for both CERN & LBNL amplifier layouts in R5.2 is well advanced*
- *Co-ax detail design and hardware specification is well advanced*
- *It all appears to fit under the floor*
- *This was one of AN's major worries*

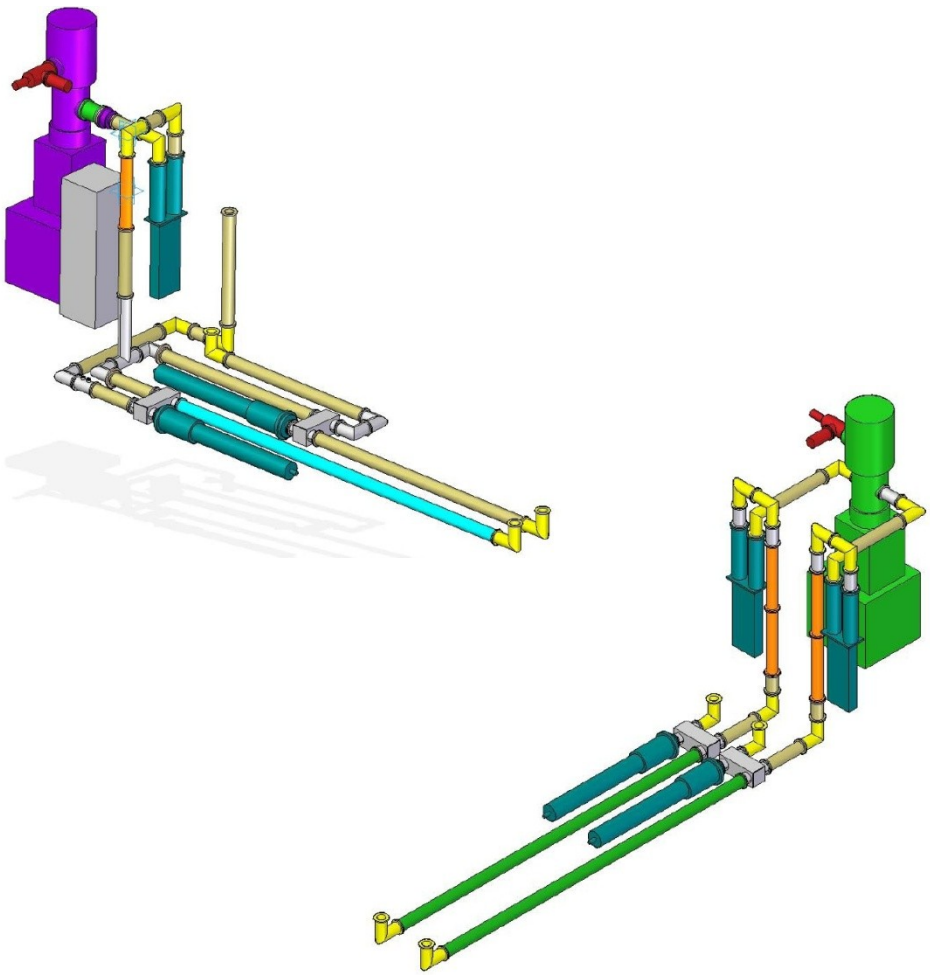

LH2 system

- *Very good progress on four fronts:*
  - *R&D hardware*
  - *Electrical/controls*
  - *Ventilation system*
  - *Safety administration*
- *Hope to be done by December, 2011*
- *Again, comfortable for Step IV*
- *No open issues or problems!*

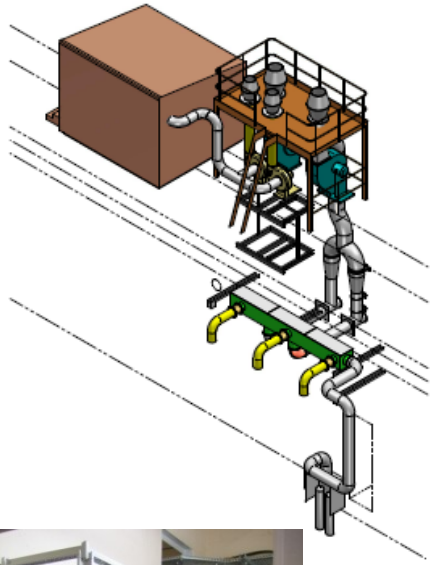

EMR integration

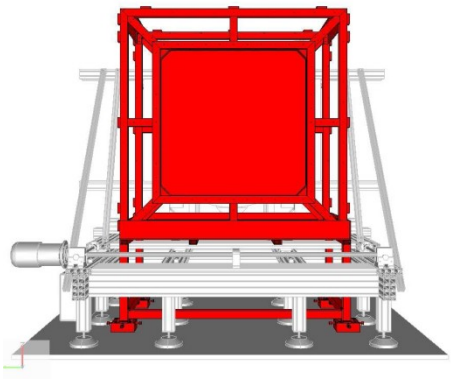

- *Need to get ready for July run:*
  - location of VME crate wrt EMR
  - location of power supplies (HV and LV) wrt EMR
  - position and length of cables
- *Most of this exists – Tim/Ian Mullacrane*
- *AN still not quite clear about the KL frame interface – my job to find out*

	2011										
	February	March	April	May	June	July	August	September	October	November	December
EMR construction and assembly	8 modules		16 modules + Outer box for transportation		24 modules			Complete EMR assembly			
Electronics	Production of 6 FEB+DBB And 1 VME board			DBB+VME Tests	Production of 48 FEB+DBB and 8 VME boards			Further tests of electronics			
Tests	Tests	Cosmic tests and calibration 8 modules	Cosmic tests and calibration 16 modules					Cosmic tests and calibration 24 modules			
Transportation					Delivery and installation of 3 modules at RAL					Delivery and installation of full EMR at RAL	
At RAL	CM 29					Test run at RAL 5 July – 5 August				Physics run at RAL 15 November – 23 December	

Overall Integration

- *At the information gathering stage*
- *A very big job*
- *Jason needs to know who the subsystem owners are*
- *Will use the MICO meeting list*
- *This approach is beginning to bear fruit:*
- *Integration issues are being dealt with in a measured way*

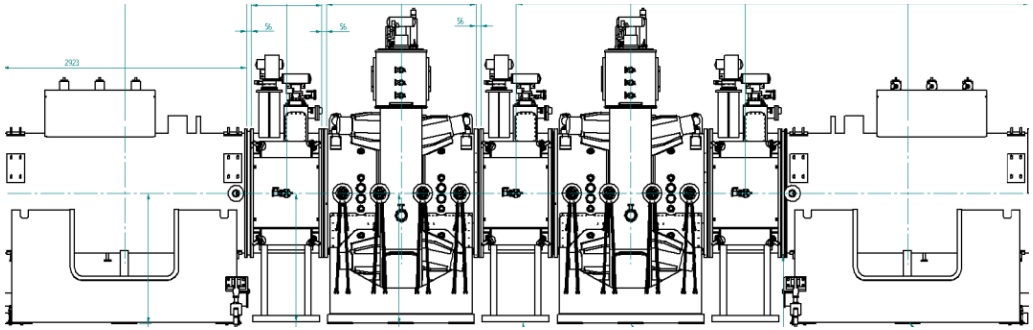

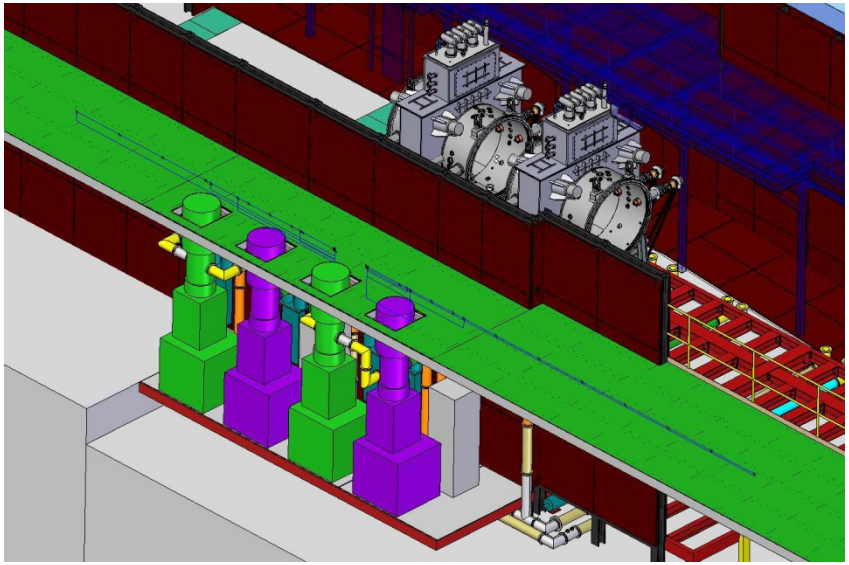

Matters arising

- *AFC platform and floor beam/plate layout are almost ready to present to Technical Board for mini-review*
- *Magnetic simulation is important – must make the VF report do what we want and give clear guidance on the shielding and force constraints for each MICE step*
- *Need to do some work in advance of EMR July run:*
  - *Locations of power supplies*
  - *Cable lengths and type*
  - *Location of rack in control room*
  - *Understand relationship with KL frame*
- *Revision of RFCC frame mounting pads*
- *Clash of RFCC (and possibly EMR) with South mezzanine*