Status of the MICE Target(s)

Paul Hodgson

The University of Sheffield

On Behalf of the Target Team

Introduction

- T1 Operation 2010
- T2.X Target Performance and Development
- Stator Development
- Mechanical Development
- Target Electronics
- Future Development
- Conclusions

The Two Target Systems

The T2 Test Rig in R78

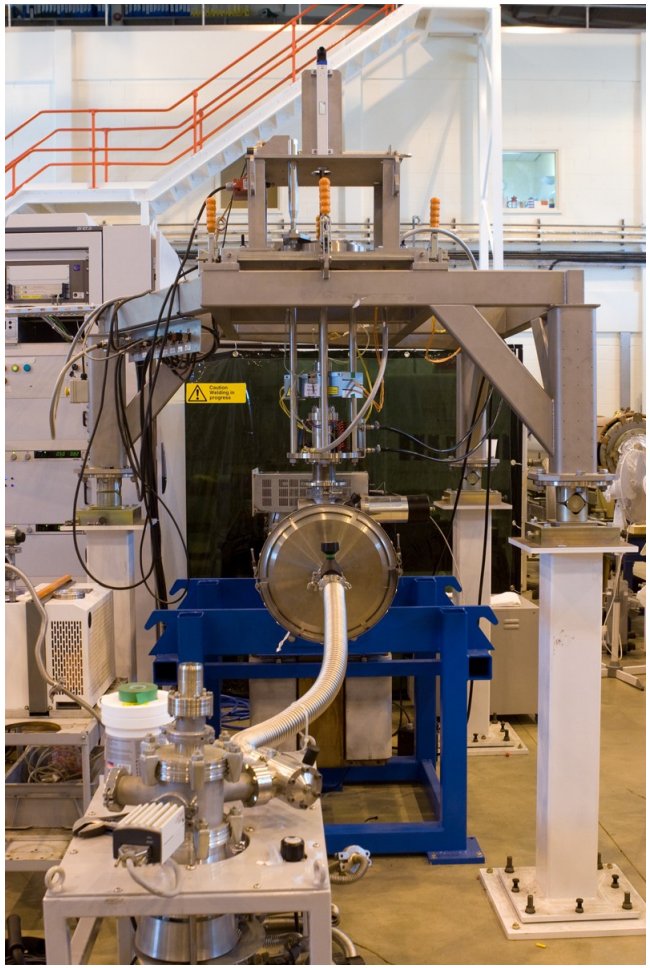

T1 installed in ISIS

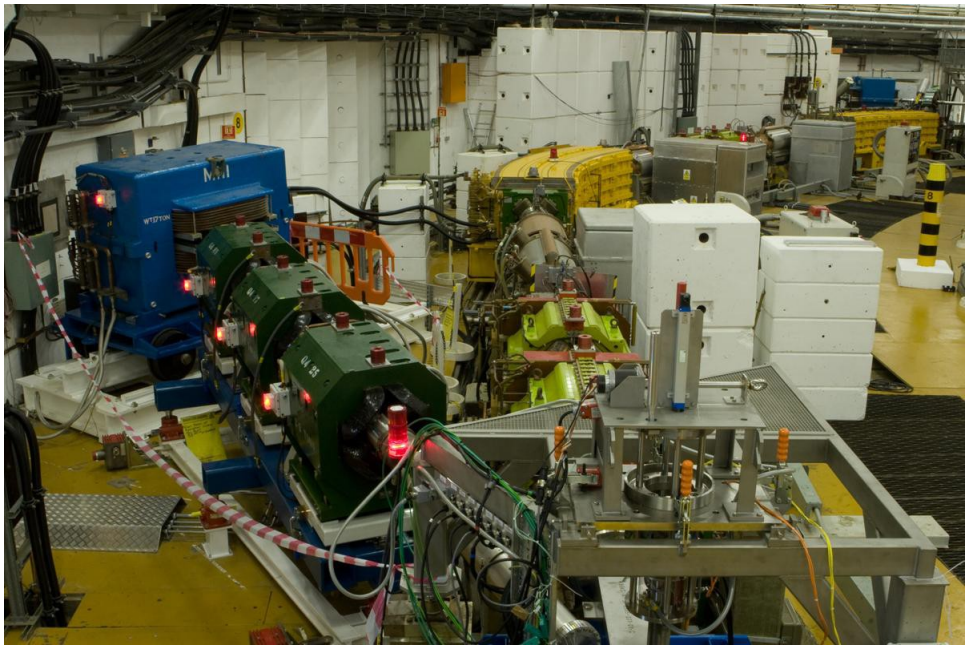

Pulse Statistics

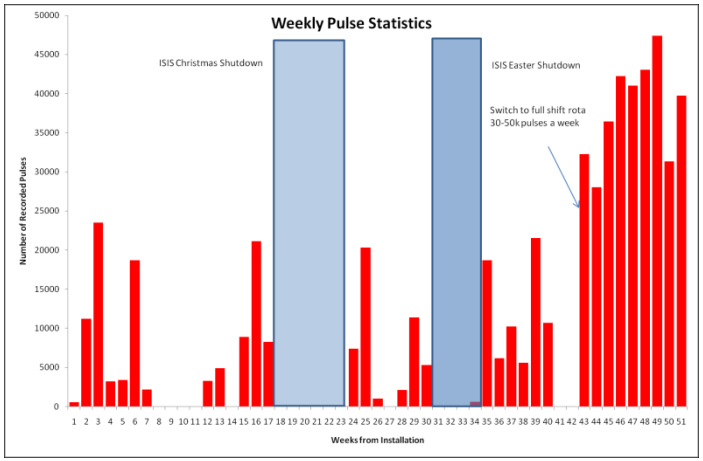

571k pulses in ISIS (620k total)

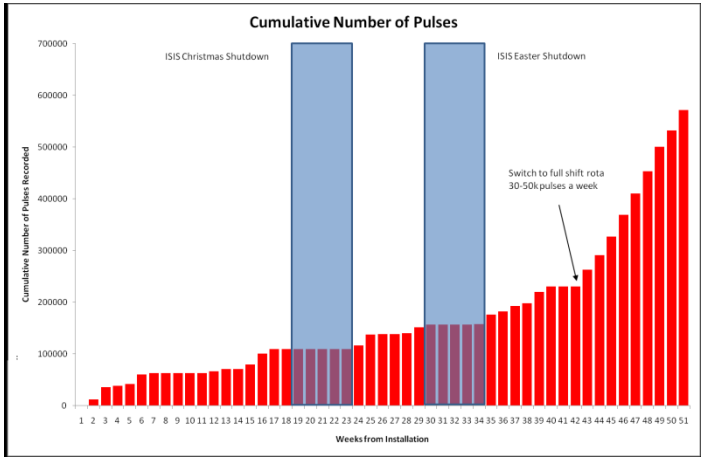

Calibration Plots

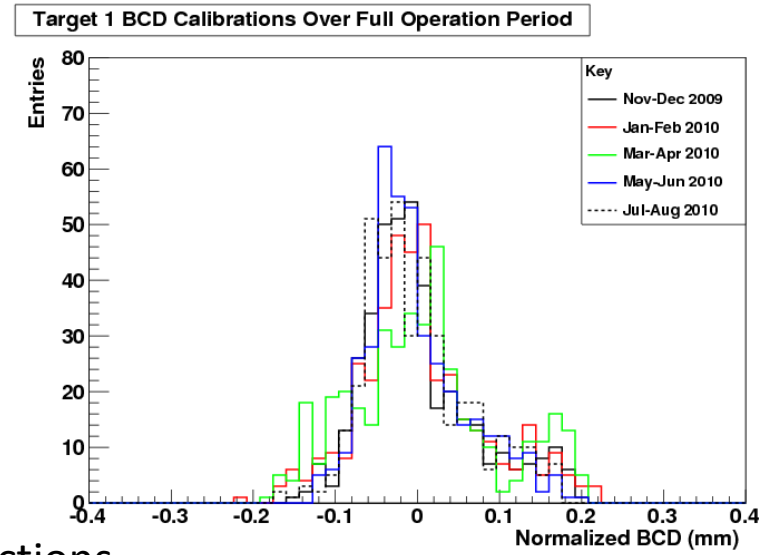

Visual inspections

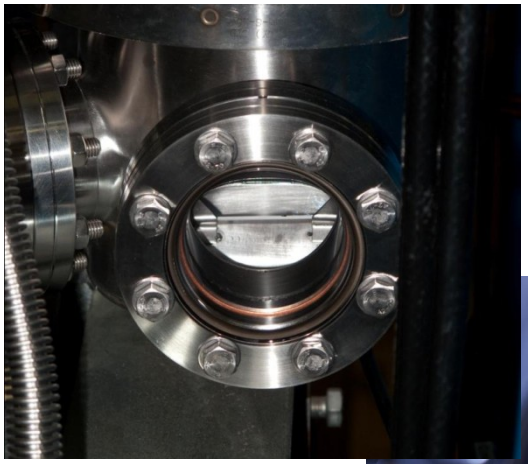

7th Sept 2009

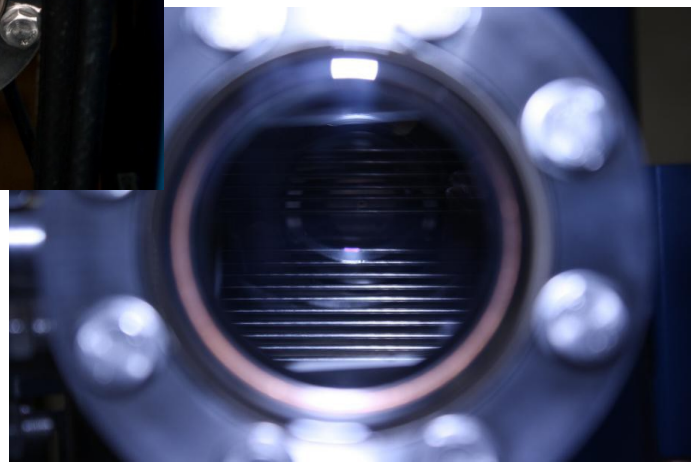

27th Aug 2010

Decision made to continue using this target during 2011

T1 Re-Commissioning

- 26-01-2011 - T1 was re-commissioned
- Visual inspection
- Chiller unit in catacombs failed
- Replaced with one from R78
- Vacuum valve opened
- Controls/Electronics tested
- Frame raised/lowered – new PPS system in place
- Target operated at calibration BCD for 400 pulses
- Everything looks fine
- Ready for operation in 2011

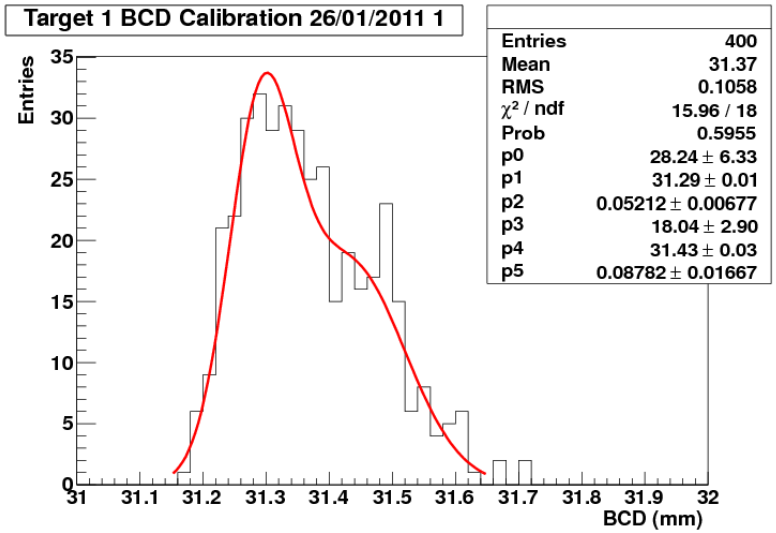

T2.X Development History

- 2.1 – DLC/DLC
  - After examining plots decided that the performance was unacceptable
  - Ended test after 1000 pulses

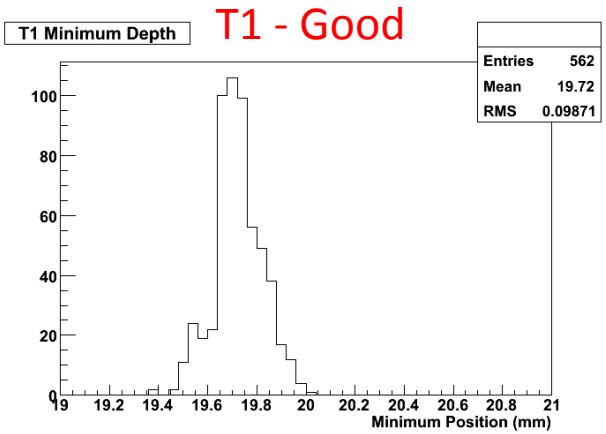

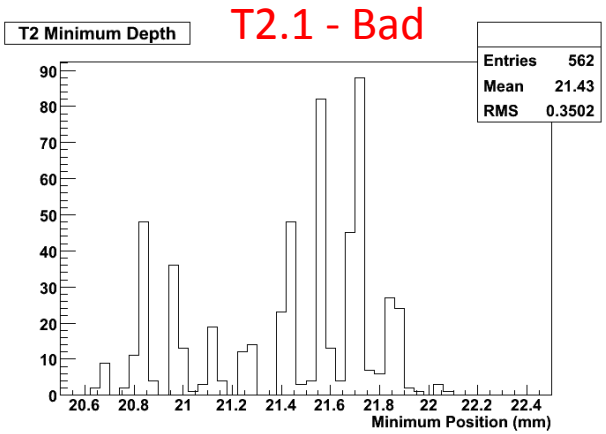

- 2.2 – DLC/DLC
  - Ran for 80k pulses and again saw poor performance
  - Decided that DLC/DLC was not the best material combination

T2.3 Performance

- 2.3 – DLC/Vespel tested early 2010
  - First try with the new Vespel (polyimide) bearings
  - Ran for 2.1 million pulses then stopped for inspection
  - Too much dust produced but otherwise encouraging
  - This was caused by poor finish on one side of DLC coated shaft
  - We had used a poorly finished shaft to allow rapid test while improved shafts were in production

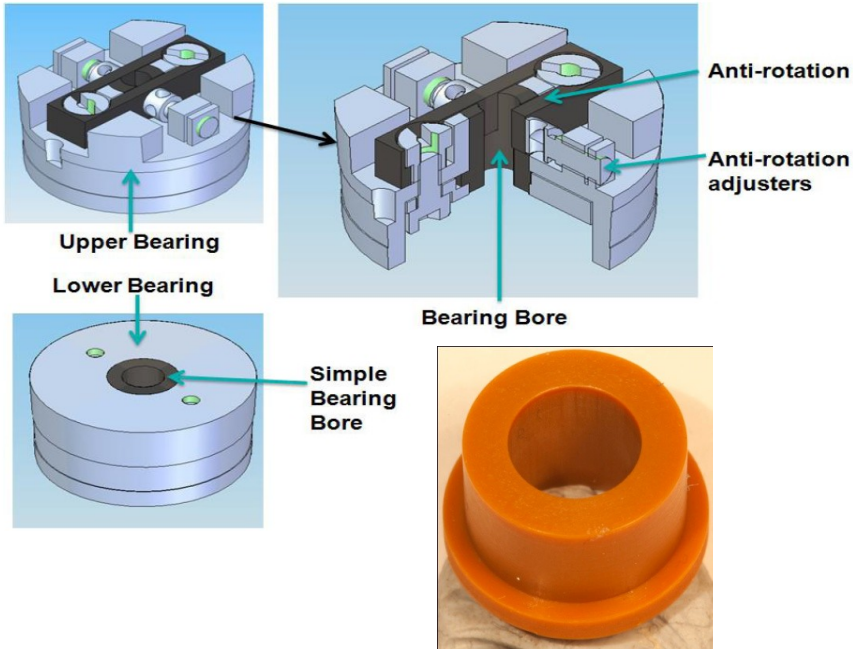

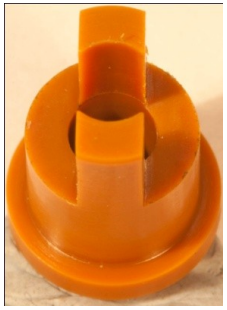

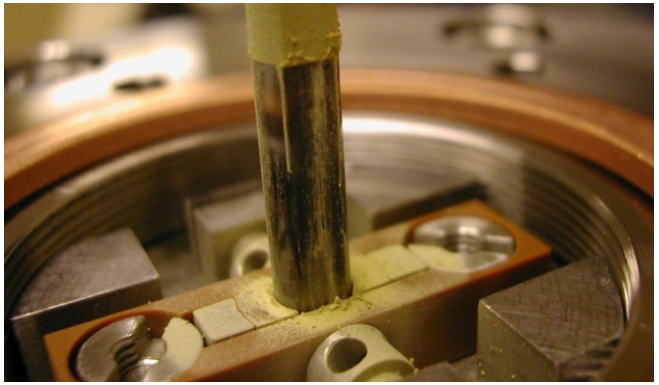

T2.4 Performance

- T2.4 DLC/Vespel – Installed Nov 2010
- Improved surface finishes on shaft and bearings
- Dust Catcher added below bottom bearing
- Ran target for ~1 million pulses
- Inspect weekly (500k)
- Using the new FPGA controller
- Digital data

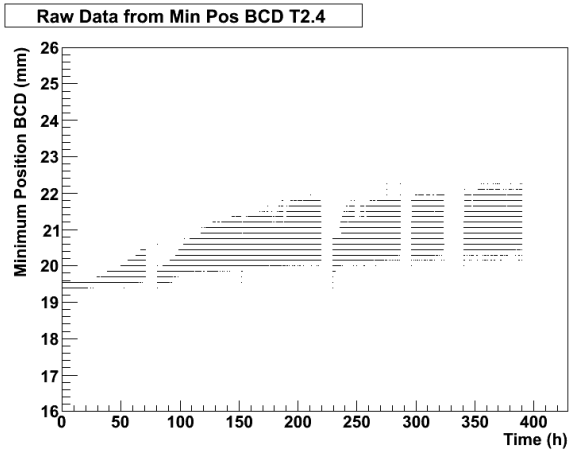

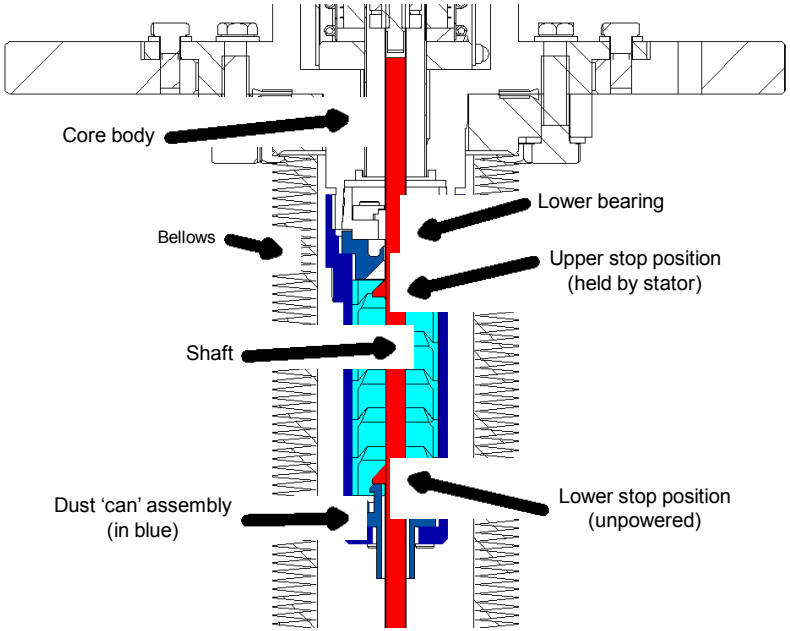

T2.4 Performance

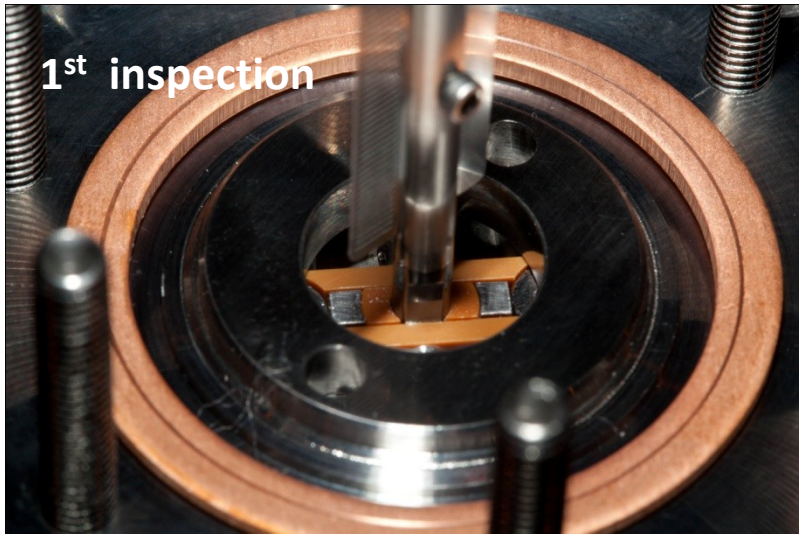

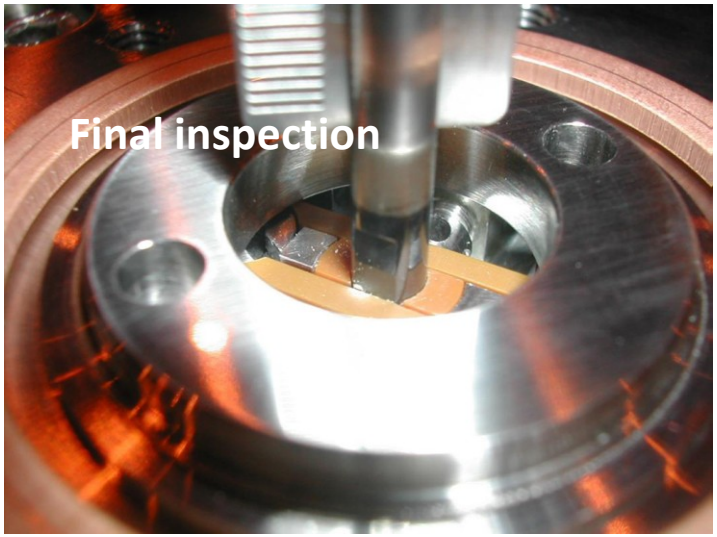

Wear on one corner

Shaft appears to be rotated in bearing

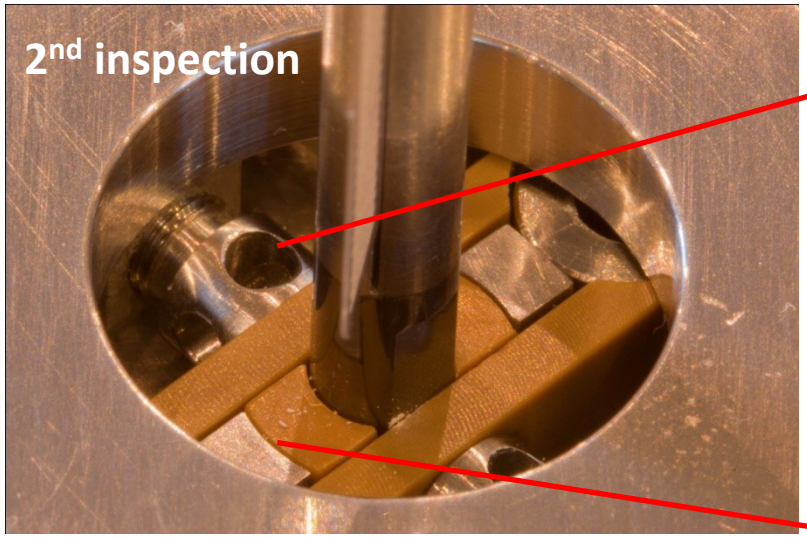

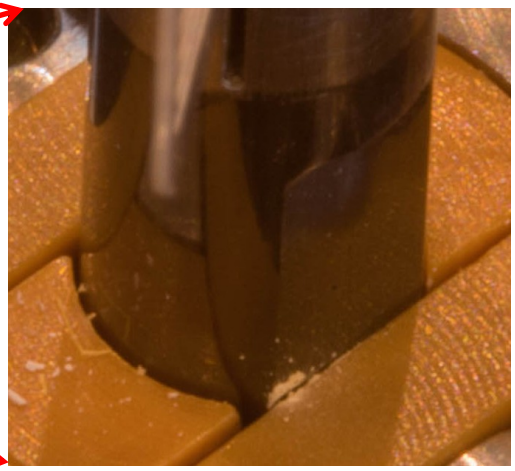

Very little dust seen

T2.4 Performance

Digital data – exact position from controller

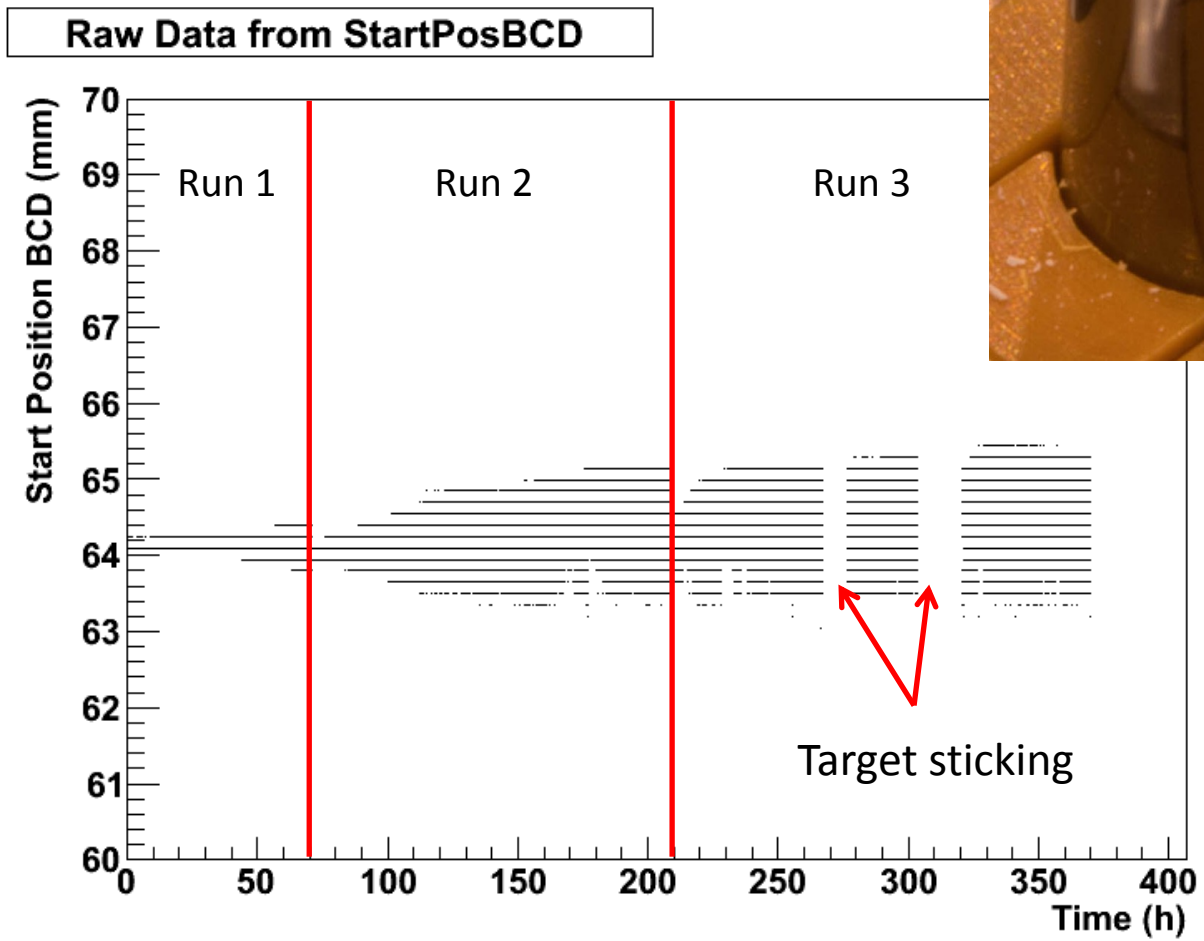

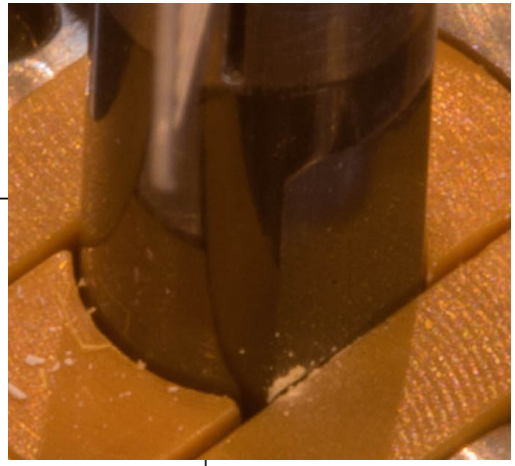

Target became “stuck” several times (8) during run

T2.4 Performance

- The shaft was operated for approx. 1 million pulses.
- There was very little dust production.
- What material was produced was contained within the stator and the dust catcher.
- There was very little evidence of wear on the VESPEL bearings.
- The target became “stuck” in capture position several times.
- The sticking occurred at the top of the target trajectory.
- This problem now understood and the bearings modified to prevent this happening.

T2.5 Performance

- 2.5 – DLC/Vespel
- Top Bearing Modified

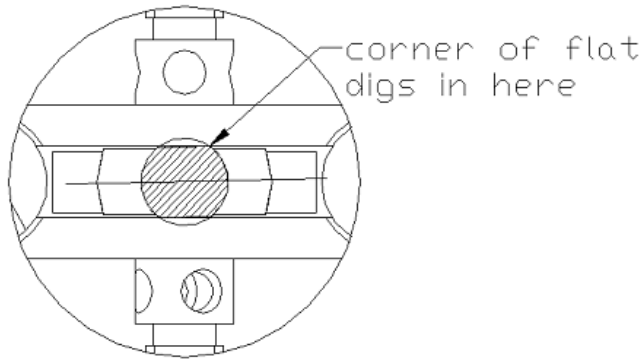

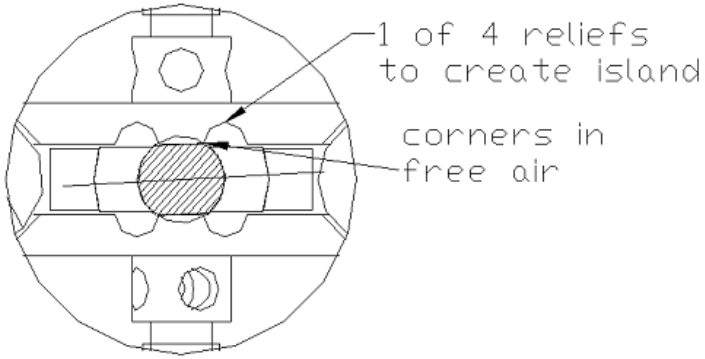

T2.5 Performance

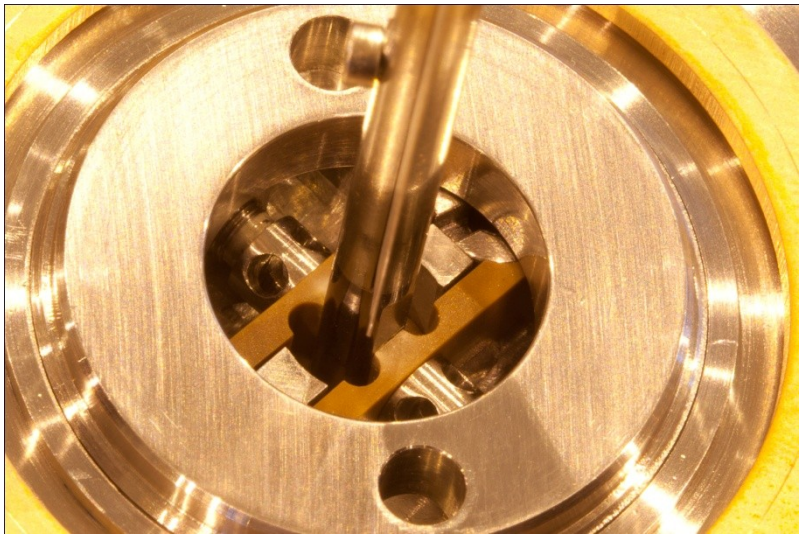

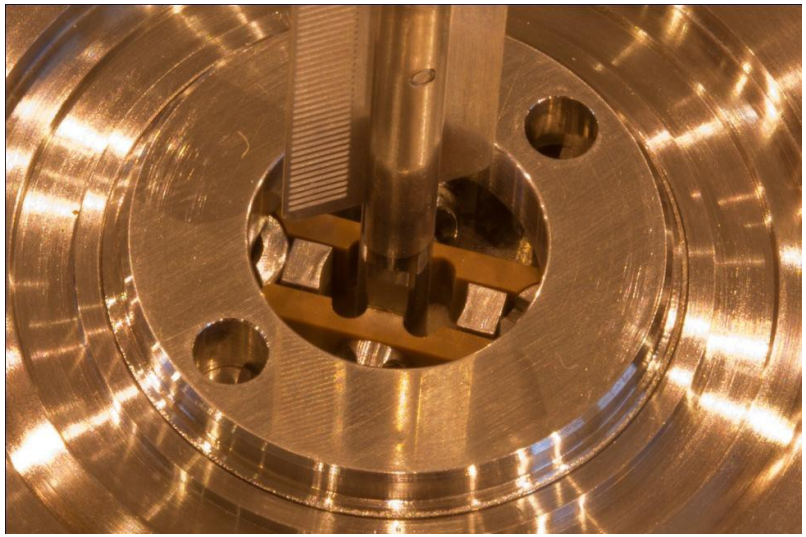

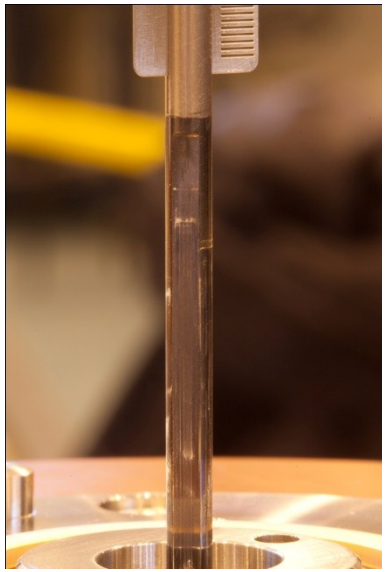

800 hours of running

2.3 million pulses

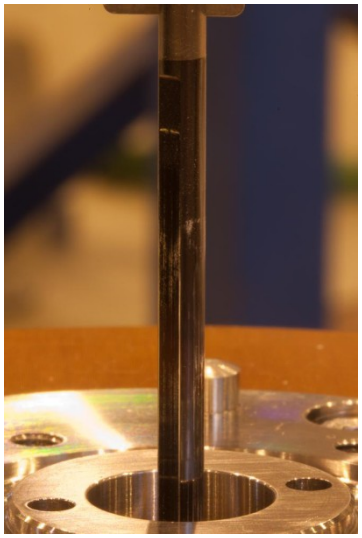

T2.5 Performance

Digital position data for entire run (5 inspections)

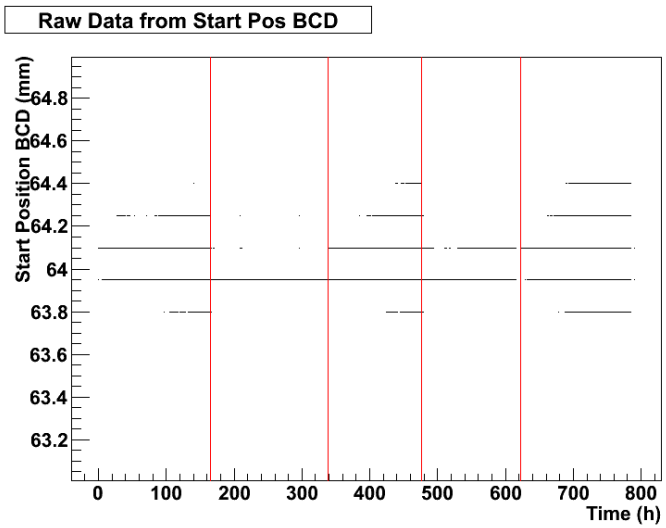

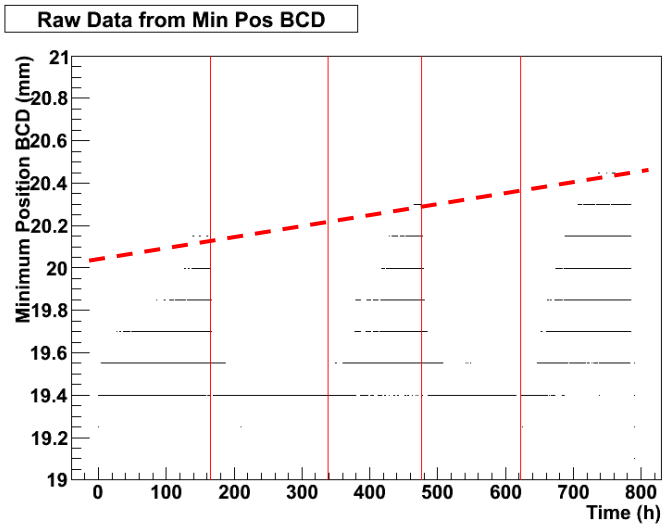

No sticking observed
Gradual but slow increase in wear
Estimate target will be good for at least another 2 million pulses before variation becomes a problem

T2.5 Performance

Comparison between T2.3 and T2.5

T2.3

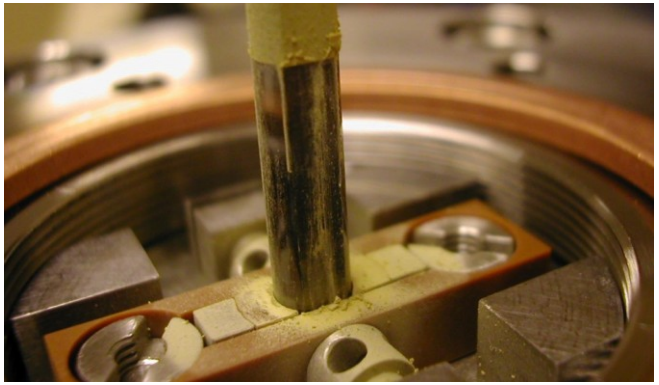

2.1 million pulses

T2.5

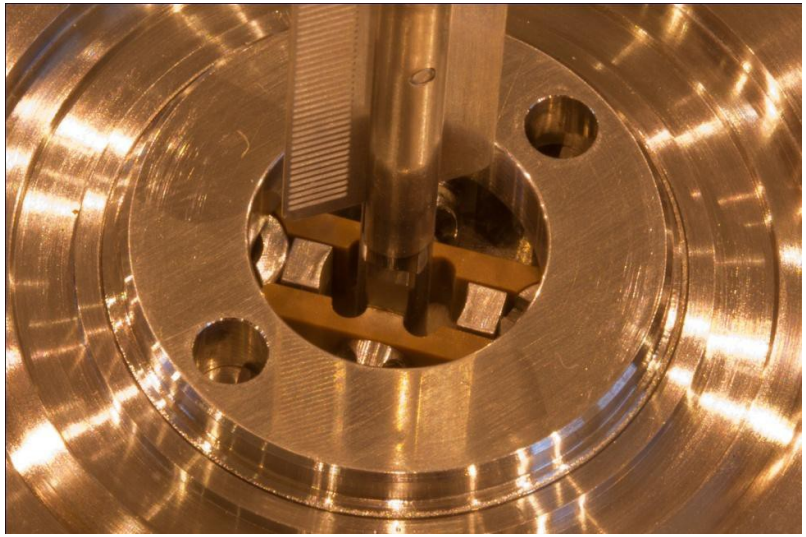

2.3 million pulses

A major improvement

Remember that stator 2 would not pass new QA

T2.5 Performance

- T2.5 working very well
- 2.3 million pulses with little dust produced and no sticking
- Maximum number of pulses recorded in 2010 with T1 was 50k per week
- Even if we double this we could run for 20 weeks
- This is longer than interval between ISIS shutdowns
- Believe we now have a robust mechanical design
- Plan to assemble a T2.6 and check reproducibility with a full 3+ million pulse run

Stator Development

Magnetic axis checked as possible cause of DLC/DLC failures

Magnetic axis and mechanical axis not aligned

Discrepancy approx. 300 µm

Decision made to improve coil design and QA

Old coils individually wound

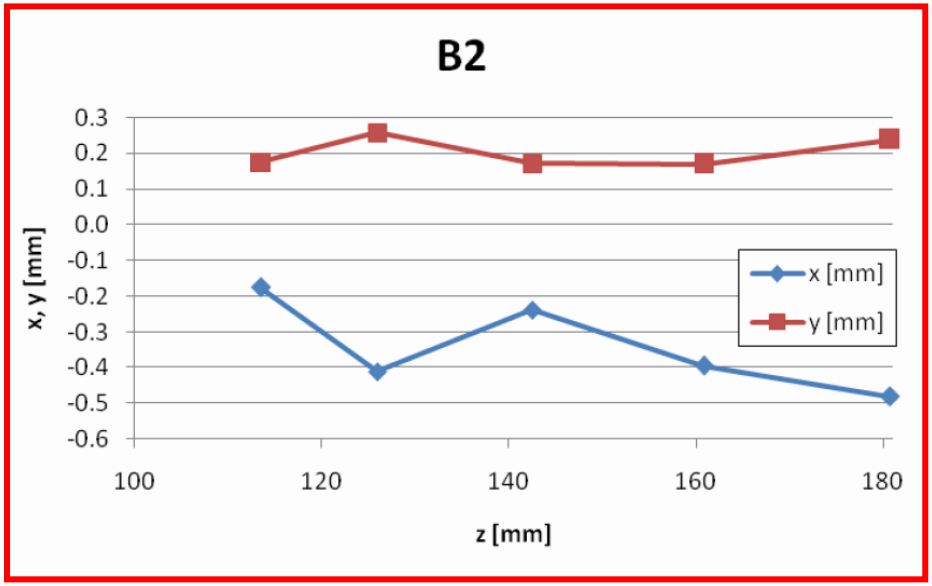

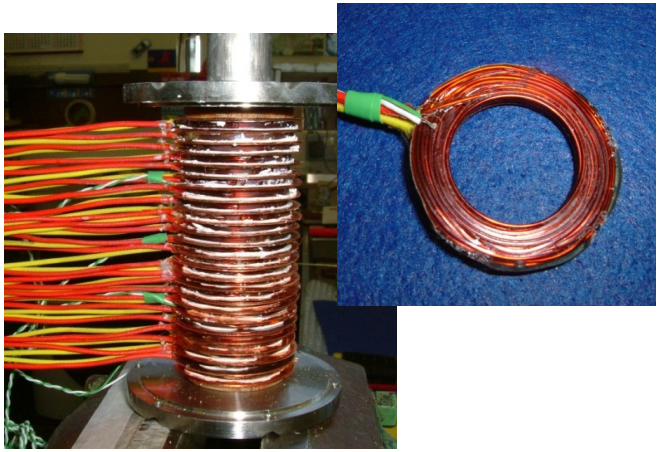

The new design is a bobbin. Coils directly wound
Into fixed slots. Should give high degree of uniformity

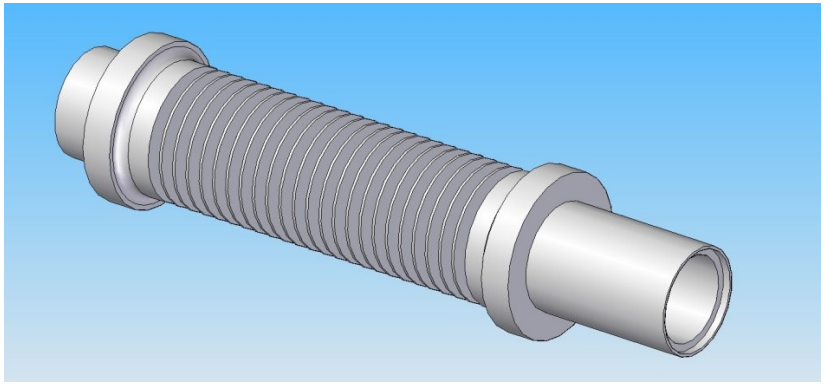

Stator Development

The fully machined bobbin

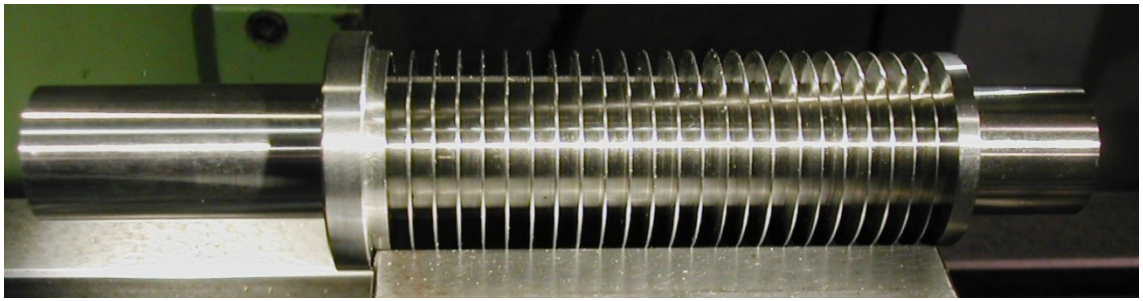

Use square section wire as this maximises packing density

Counter-wind coils

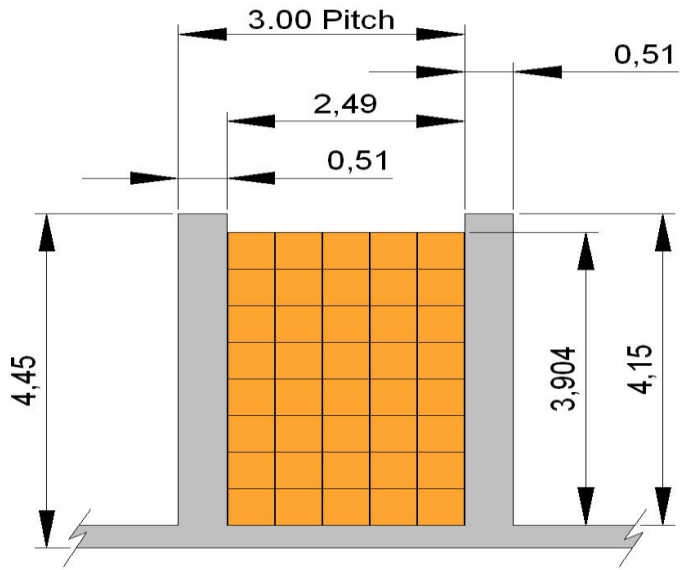

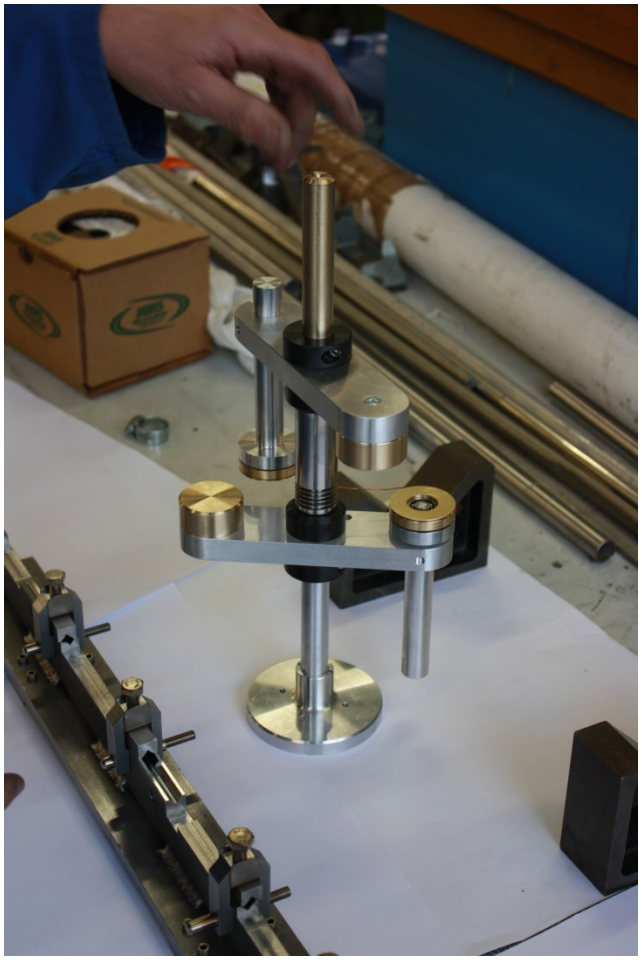

Layout of Proposed Prototype Bobbin

This is a layout showing proposed layout for the new bobbin. It uses PCB bus bars to connect the coils internally. A cooling jacket will be fitted around the bobbin structure which will consist of either 2 o 3 pieces

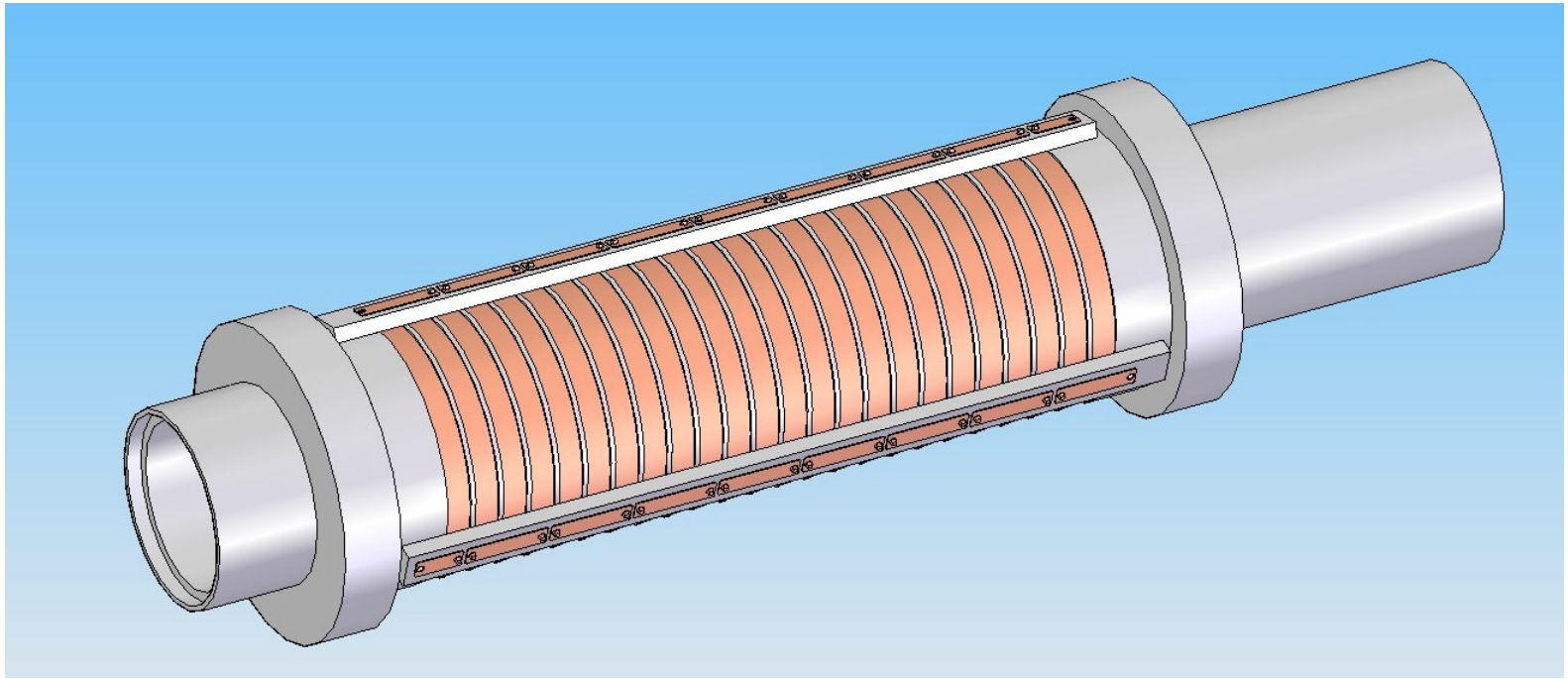

MICE Target QA

- Target QA

'Team Effort'

- Important operating characteristics defined by Target group review of prototype operation (successes & issues)
- Close cooperation with manufacturers in establishing processing limits, incl. agreement on procedures, certification, reports, etc for quality control
- Close cooperation with inspection department in developing engineering drawings with robust functional datum points and consideration to methods of measurement
- Inspection data related to particular Target for easy review if issues occurred
- Assembly processes, incl. those for consistent set-up, developed & documented (in drawing or MICE notes)

MICE Target QA

- Target QA
  - Benefits
    - Expected level of fit & function
      - Barring unforeseen / unpredicted problems
    - Consistent quality
      - T2.5 bearings wear like T2.4's (up to T2.4's 1 million cycles), future targets expected to wear like T2.5 (up to '?' million cycles)
    - Possibility of interchangeability & modification of configuration without re-work
      - E.g. Different bearing trials can use same Target body & shaft
    - Appropriate changes based on review of inspection data
      - E.g. surface finish improvements, as measured by Talysurf and microscope inspection, lead to greatly reduced bearing wear

MICE Target Improvement

- Continued improvement
  - Current Shaft
    - Welded stop, on lower section, causes distortion to shaft (currently mechanically corrected by bending)
    - Welded stop was shown through testing to fail after several full speed impacts (possible only during a fault)
    - Poor surface finish of ground lower section

Current: Tubular lower section with welded-on stop

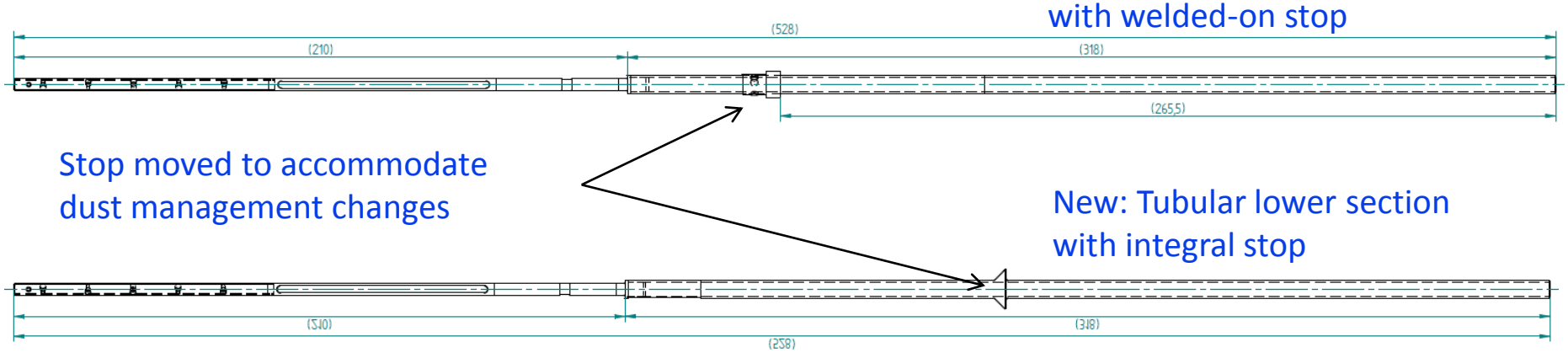

Stop moved to accommodate dust management changes

New: Tubular lower section with integral stop

Subtle change to design, i.e. integrated stop =
Complex process development =
Improved quality & consistency

MICE Target Improvement

- Continued improvement
  - New shaft
    - Integral stop, 1 piece lower (from solid) must retain cylindricity of current shaft (pre welded stop)
      - Manufacture process development using fine machining and electro-erosion processes = highly cylindrical smooth hollow shaft
    - Replace unpredictable mechanical straightening of full length 2 part shafts
      - Developed heat treatment & accompanying jig to straighten the Ti shaft
      - Heat treatment process will ensure repeatability of quality
    - Current production
      - 1 lead shaft to develop quality, processing, inspection etc.
      - 3 production shafts for T3, T4 & 1 spare
      - 6 production shafts for future use

Target Electronics

The upgraded target electronics (phase 1) has been working well in R78. The improved digital readout and controller functionality has proven to be very valuable during the recent testing of T2.3, T2.4 and T2.5

It's usefulness in R78 has meant that we have not gone ahead and installed this particular controller into the MLCR. (It has been left where the need was greater!)

Target Electronics

We are currently in the process of building 3 additional controllers, one for R78, one for ISIS and one for development work at Sheffield (Will also act as a directly swappable spare) These new controllers will have additional functionality. (Phase 2)

- Interface to the ISIS BPS system
- Additional engineering functionality that should aid target maintenance.
- All components of the target system are to be moved onto PCBs – The system will comprise of the FPGA board and two daughter cards (the current system in R78 is a hybrid of PCBs and vero-board construction)

All the PCBs for the new controllers have now been designed and are out for manufacture.

Software/Firmware to support the controller is currently being written.

If the PCB's pass testing ok then we envisage to have these three controllers operational by mid-summer.

Target Electronics

- Phase 3 of the controller upgrade involves the design of a new target DAQ to improve the current system. This will commence after phase 2 has been completed this summer.

  This will interface to the new controller and provide an improved high resolution DAQ system that will not be dependent upon third party drivers.
- Ed Overton our new PhD student will take the lead on the DAQ design overseen by Paul Smith
- This will free up Paul to do some development work on the target algorithms, as we have several ideas that could improve the performance of the target system.

Target Development

- Longer term development
- Need to optimise particle rate vs beam loss
- Currently producing 30 muons/spill at 2V.ms
  - See Marco and Adam's results
- Original specification was for 500
- This assumes we make measurement in 30 mins
- Strong constraint on maximum beam loss allowed from ISIS due to activation concerns
- We have run at 8 V.ms though (factor of 4)

Target Development

- **Pulse target more frequently**
  - Currently we run quite conservatively at 128/50
  - Could in principle run at 64/50 – factor of 2
  - Can we run faster ? 32/50 ? – factor of 4
  - Cooling is issue here
- **Run target at higher acceleration**
  - Go in faster, later
  - More efficient use of beam loss we produce
  - Briefly tested this but need to quantify any increase in particle rates

Target Development

- **ISIS Beam Bump**
  - See MICE Note 284
  - Promising first look
  - Again this needs quantifying
  - Careful measurement of effect on particle rate
- **Take data over longer time period**
  - Initial plan for 30 mins
  - Can we increase this ?
  - Stability of cooling channel
- **Can we increase the gate?**
  - Currently integrate over 1ms
  - Need to examine this with Tracker and TOF DAQ people

Conclusions

- After a lot of work over past year re-designed and re-engineered target(s) are looking good
- DLC/Vespel design looks like it works well
- Little evidence of serious dust production
- ~3 million pulses continuous operation
- Believe we can now move to a maintenance mode on target design
- Concentrate on meeting particle production goals

Conclusions

- T1 worked well in 2010
  - leave in ISIS for this years more limited running
- Stator redesign now underway with improved coil winding and homogeneity
  - Work in progress
- No major re-engineering of other components envisioned
  - Current design works well
- Control and Electronics upgrade to FPGA going well with first system in operation in R78
  - 3 systems ready summer 2011