CERN

Status and prospects in fast beam-based feedbacks

W. Höfle

CERN, Geneva, Switzerland

Disclaimer

- Overview and review of activities from the last ten years
- focus on CERN wideband transverse feedback system developments
  - complementary to established coupled bunch feedback systems
- results of original work is referenced, credit given to the original work
- aim is to demonstrate that the technology is sufficiently advanced in order to roll-out an intra-bunch system for short bunches, aka “fast beam-based feedback”

Outline

Recap of transverse feedback systems in operation

Full exploitation of the LHC ADT system

Intra-bunch feedback in hadron synchrotrons

Hardware and technology development

Simulations towards future upgrades and accelerators

Recap of Transverse feedback systems at CERN

- CERN LHC injector chain excellent example for need of beam based feedback systems, 5 synchrotrons with transverse feedback systems

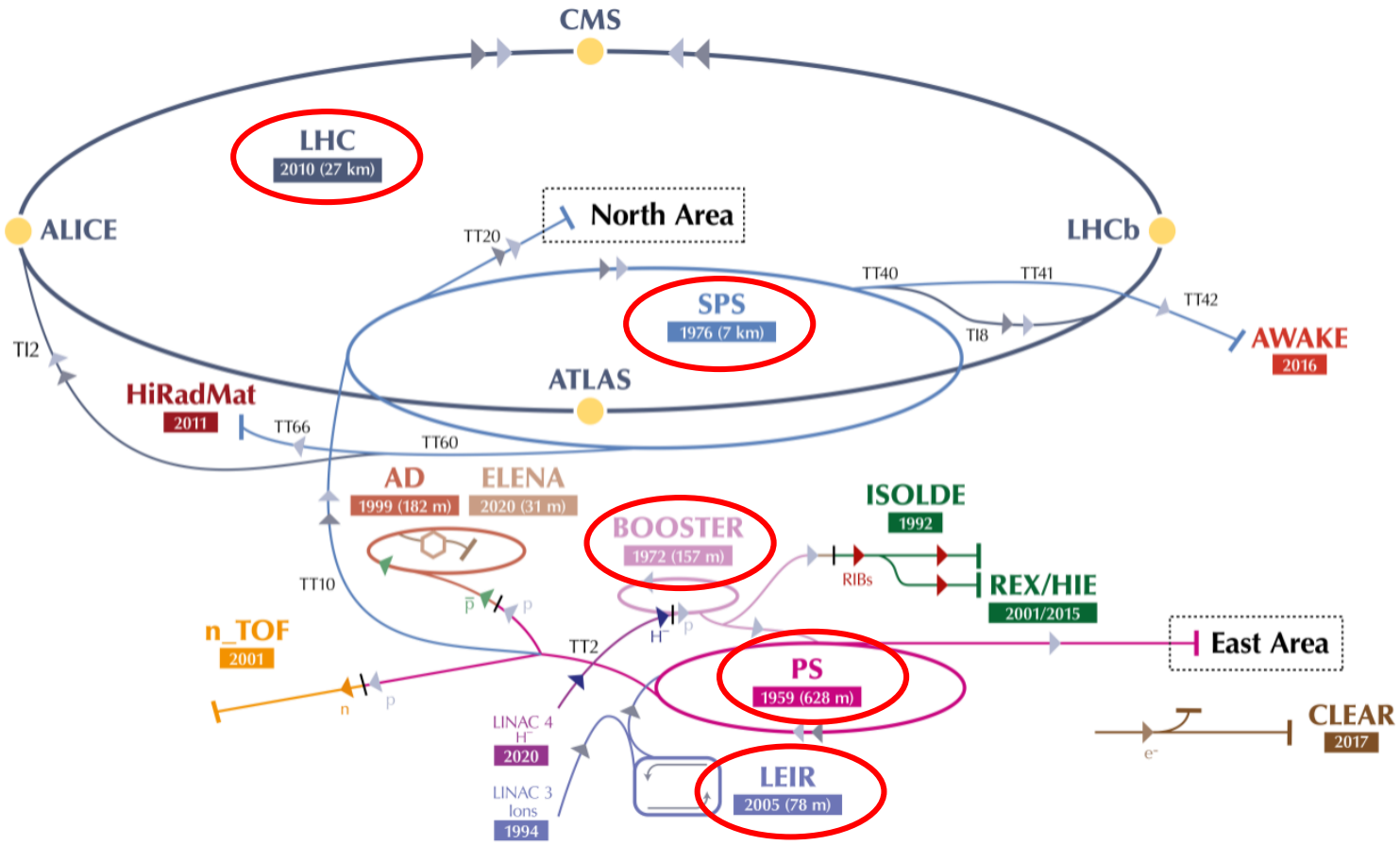

Principle of beam-based (transverse) feedback

- One or multiple pick-ups, turn by turn, bunch by bunch position with digitization and processing
- widely used in high intensity lepton colliders (B factories) and light sources to provide beam stability
- High intensity hadron machines need feedback for stability as well
- Use in hadron colliders more challenging due to need for low noise systems, i.e. detection of beam oscillations
- LHC collider uses TFB all the time including with stored, colliding beams, (protons and Pb ions) since 2010
- "fast feedbacks" → extend damping to intra-bunch feedback in GHz range

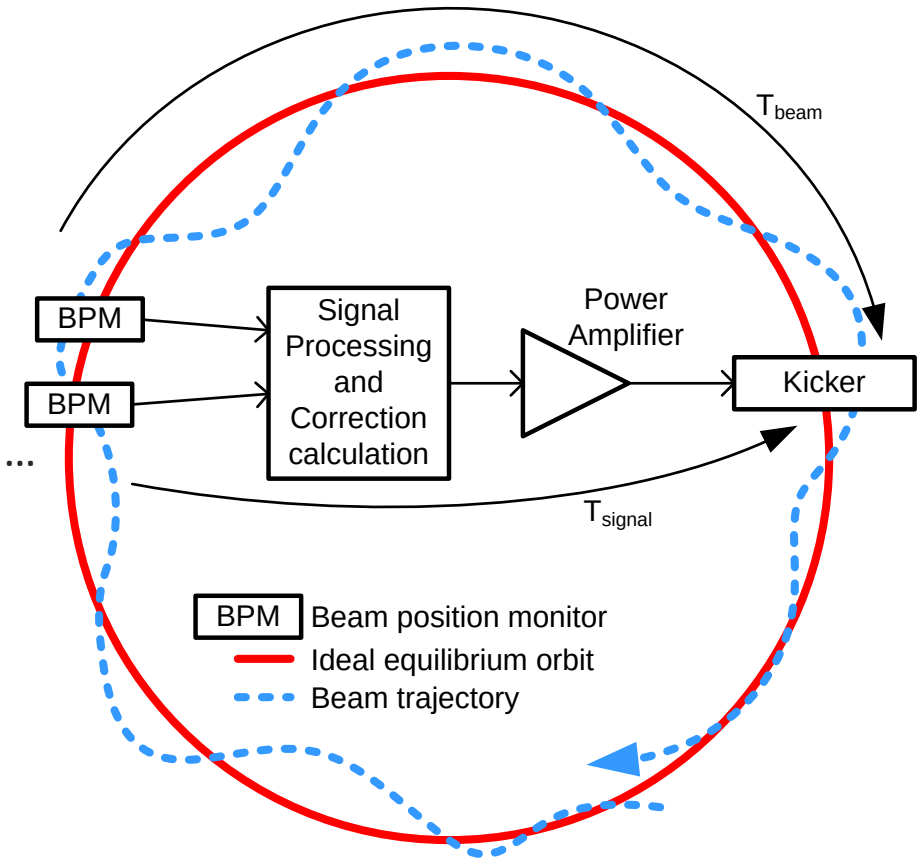

$$T_{signal} = T_{beam} + n\, T_{rev}$$

Injector transverse feedbacks at CERN

- LHC Injector transverse feedbacks at CERN and studies
  - next “upgrade to digital” opportunity for LEIR

Accelerator / energy	Kicker / power per electrode frequency band	Processing used	Last upgrade
LEIR	striplines up to 100 MHz	2 pick-ups	2005
4.2 MeV/u – 72 MeV/u (kin. E)	100 W, 50 Ω, up to 100 MHz	analog, vector sum	
PS Booster	striplines up to 100 MHz	1 pick-up	2020
160 MeV – 2 GeV	800 W, 50 Ω	digital	
PS	striplines with impedance transformer	1 pick-up (+spare)	2020
2 GeV – 26 GeV/c	5 kW, 125 Ω, up to ~ 60 MHz	digital	
SPS	electric field kickers, high impedance	striplines, electro-static	2014
14, 26 GeV/c – 450 GeV/c	tetrodes, 30 kW, 180 Ω, up to 20 MHz	digital, pick-up pairs	
SPS for wideband feedback study	2 short striplines and 1 Faltin type kicker	1 stripline exponential PU	2008
26 GeV/c	250 W, 50 Ω, 5 MHz – 1 GHz	Digital up to 4 GS/s (3.2 Gs/s)	to 2018

study

Potentials of a (wideband) feedback system

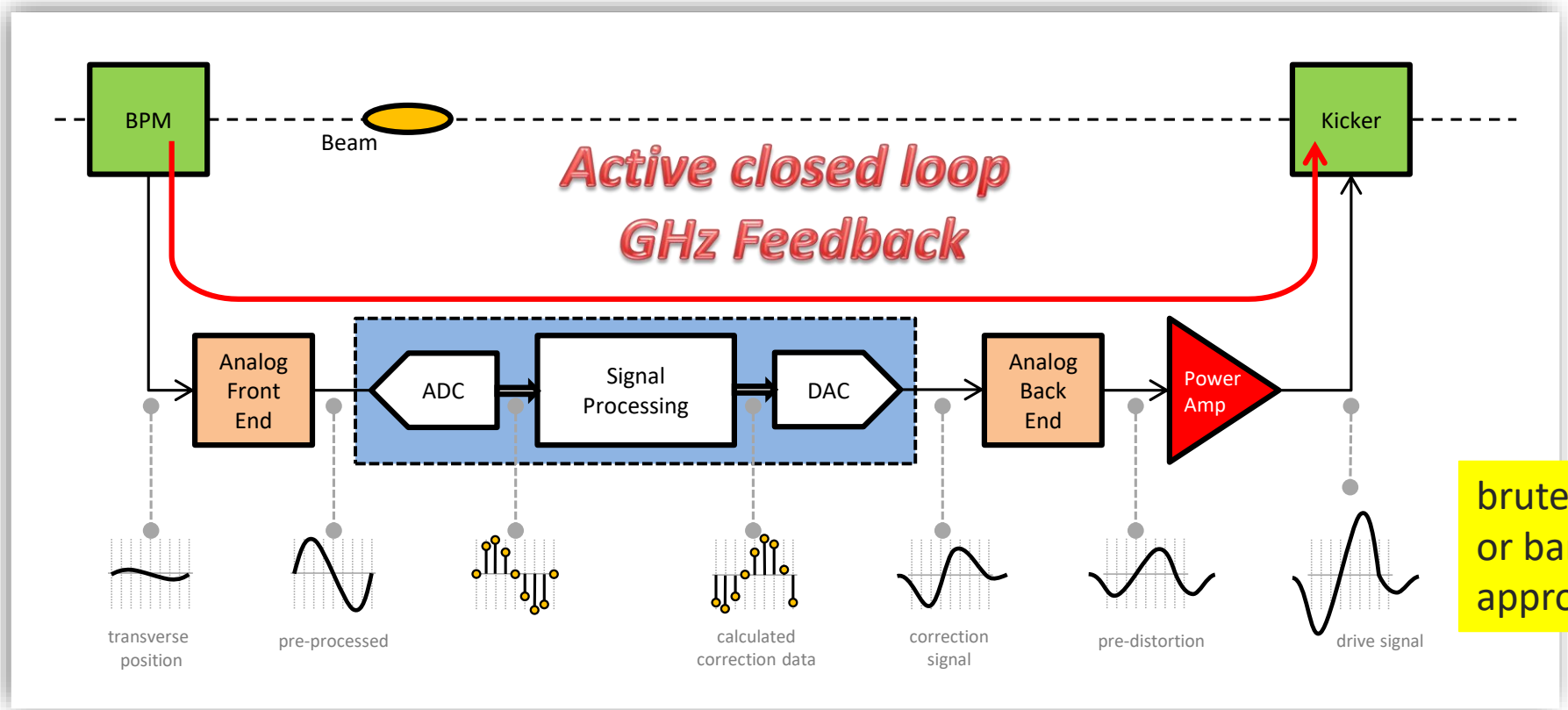

brute force sampling or band-by-band approach

- active damping of single or coupled bunch instabilities including intra-bunch motion
- no introduction of additional tune spread
- no introduction of additional non-linearities

- technically challenging and complex system → close follow-up required during operation
- imperfections can lead to loss of stabilization (i.e. noise or saturation)

JPARC intra-bunch feedback

- Intra-bunch oscillation on moderate length bunches (150 ns- 200 ns)

Table 1: Main Parameters of J-PARC Main Ring

Circumference	1568m
Injection Energy	3GeV
Extraction Energy	30GeV
Repetition Period	2.48s
RF Frequency	1.67-1.72 MHz
Number of Bunches	8
Synchrotron Tune	0.002-0.0001
Betatron Tune (Hor./Ver.)	22.41/20.75

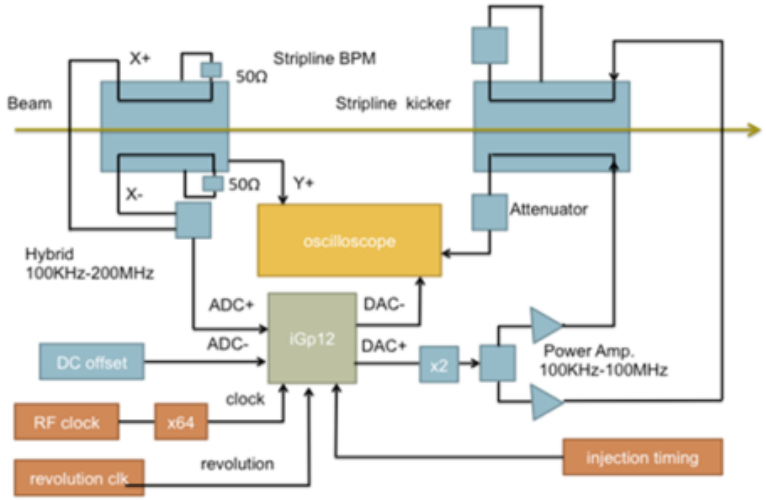

Figure 1: Schematic of the intra-bunch feedback system.

- commercial electronics iGp12 (Dimtel) adapted to the JPARC main ring
- pick-up similar to CERN SPS wideband pick-up, good frequency response up to 1 GHz shown

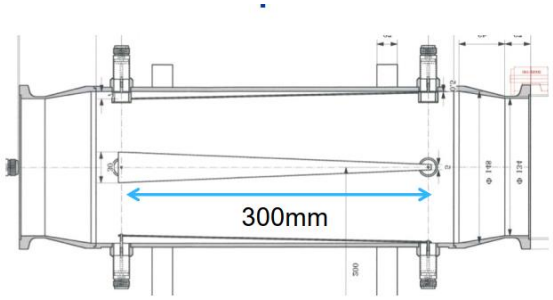

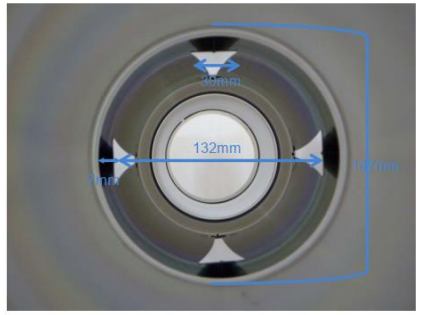

Stripline pick-up with non-uniform electrodes similar to CERN SPS wideband transverse pick-ups

K. Nakamura et al., IPAC'14, THOAA03

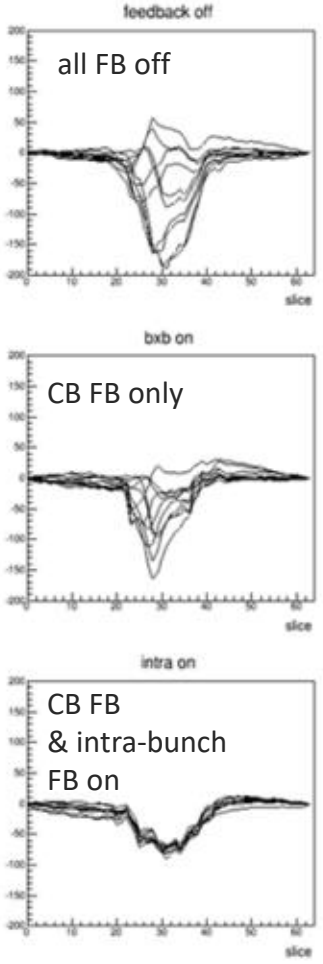

CERN PS Example of intra-bunch feedback

- CERN PS transverse feedback
  - Example of intra-bunch instability mitigated by transverse feedback
  - within bandwidth of upgraded coupled bunch system
  - permits to run LHC beam without using the traditional coupling between H, V for instability mitigation
  - Instabilities also seen at transition crossing (up to 800 MHz) for very high intensity single bunches that could benefit from increased bandwidth of a wideband system → possible use case for bandwidth increase

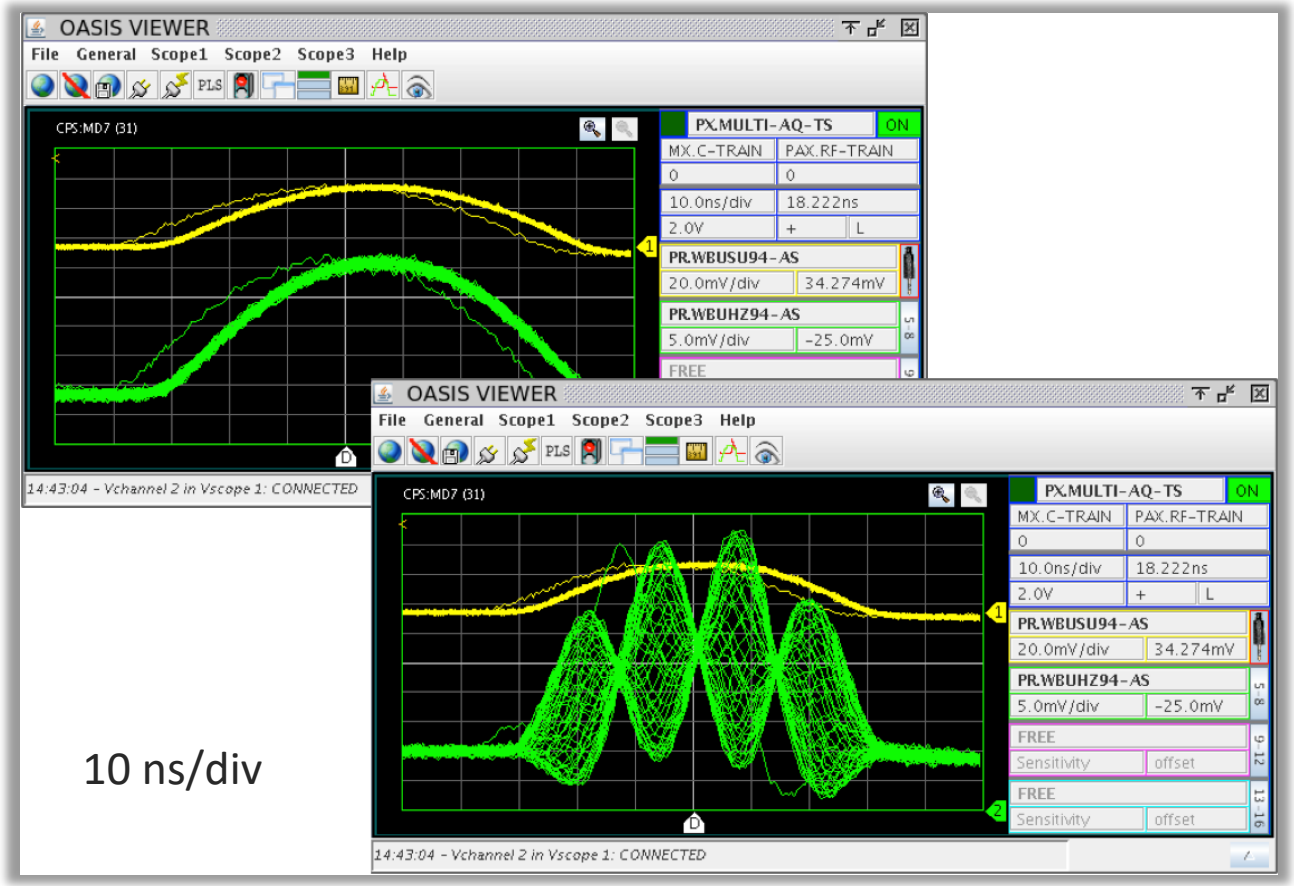

CERN LHC transverse damper (aka ADT) power system

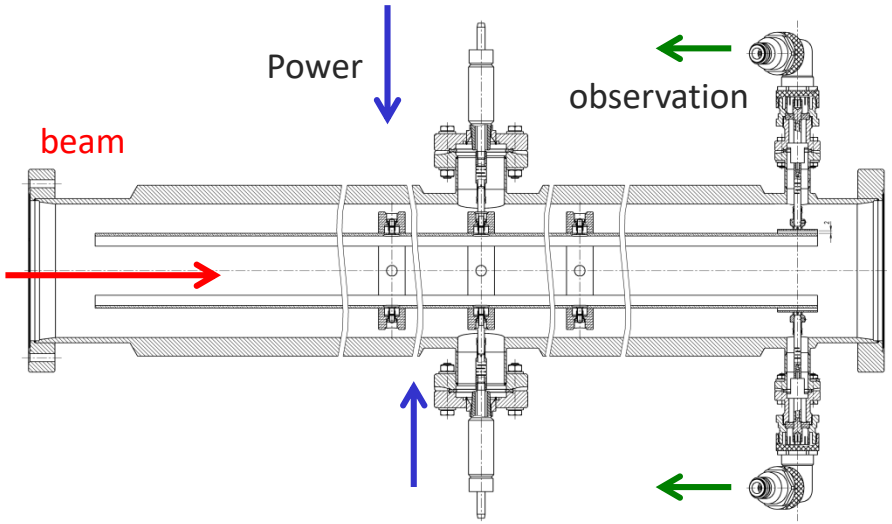

ADT kicker. The beam is kicked by electric field

LHC transverse Feedback (ADT) kickers and amplifiers in tunnel point 4 of LHC, RB44 and RB46

- kicker length: each kicker 1.5 m
- max voltage: 10.5 kV
- 2 µrad kick to 450 GeV beam
- gain up to beyond *20 MHz*
- 16 kickers
- 32x30 kW tetrode amplifiers
- bandwidth up to 20 MHz

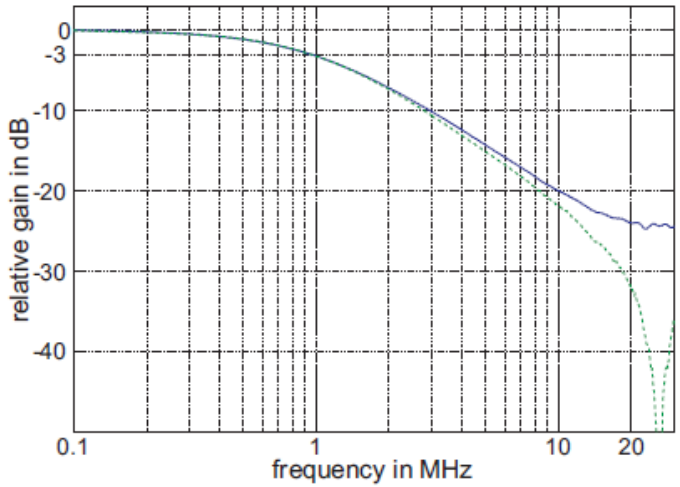

Measured ADT frequency response. Green: bare power amplifier, blue: power amp + kicker.

built in collaboration with JINR, Dubna, Russia; fully commissioned in 2010 with beam
W. Höfle et al. IPAC'11, MOPO012

Upgrades to LHC ADT and instability observation

- increase in kick strength not needed
- Improved signal-to-noise ration in position detection
  - novel receiver technique for bunch-by-bunch detection (I,Q sampling)
  - combining data from four pick-ups (double the initial number) per beam and plane
- frequency response shaping by digital filters, flat response to 20 MHz possible and used operational in parts of the cycle
- full exploitation of the diagnostics possibilities offered by the data from the feedback → “obsbox”, data recording
- installation of an intra-bunch feedback not base-line of HL-LHC upgrade
  - feasibility checked in simulation
- diagnostics of intra-bunch motion with multi-band instability monitor

Sampling and bandwidth

- reminder on sampling and bandwidth
  - motivated by appearance of single bunch instabilities
    - used operationally for LHC squeeze
    - and 25 ns spacing tests
    - relevant to all feedbacks

Condition for $h(nT_b) = 0$
→ symmetry of roll off

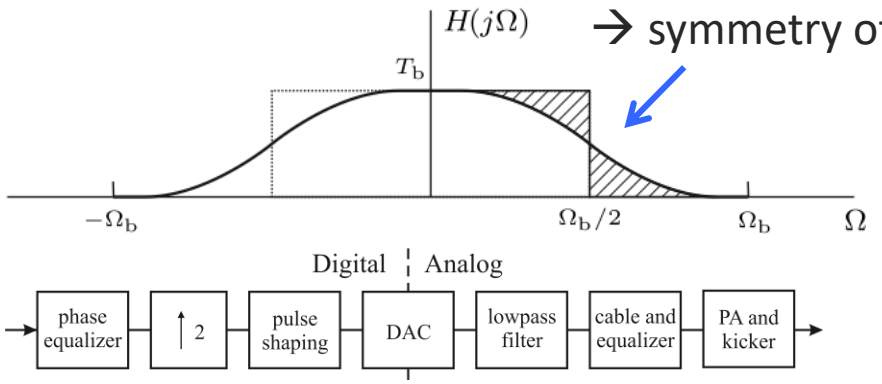

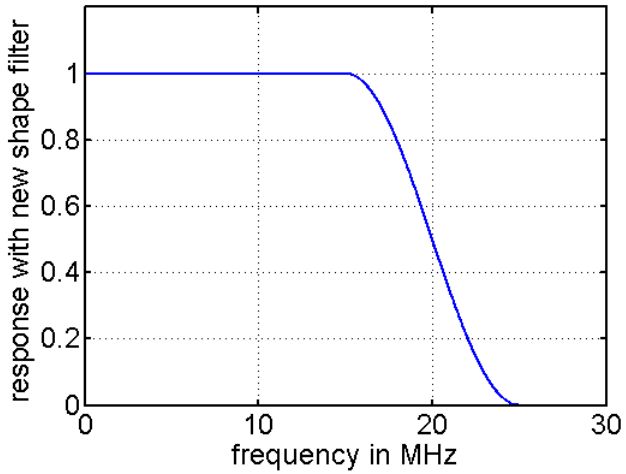

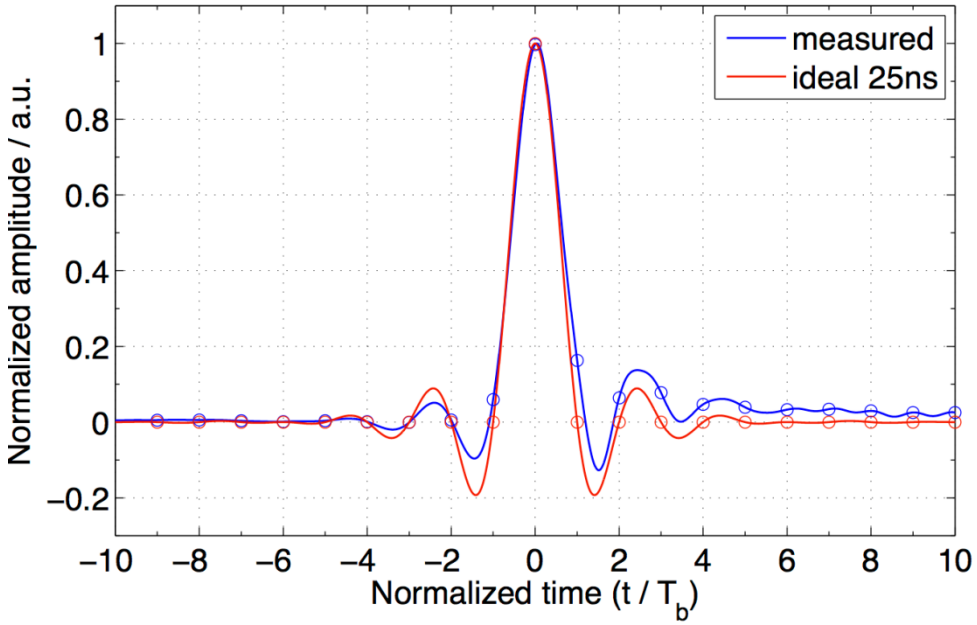

W. Höfle et al.
IPAC'13, WEPME043

LHC ADT improvements - receiver

- LHC ADT improvements, new receiver developed
  - potential to be used to extract band-by-band intra-bunch motion
  - Application possible to head tail feedback needed for crab cavities in HL-LHC

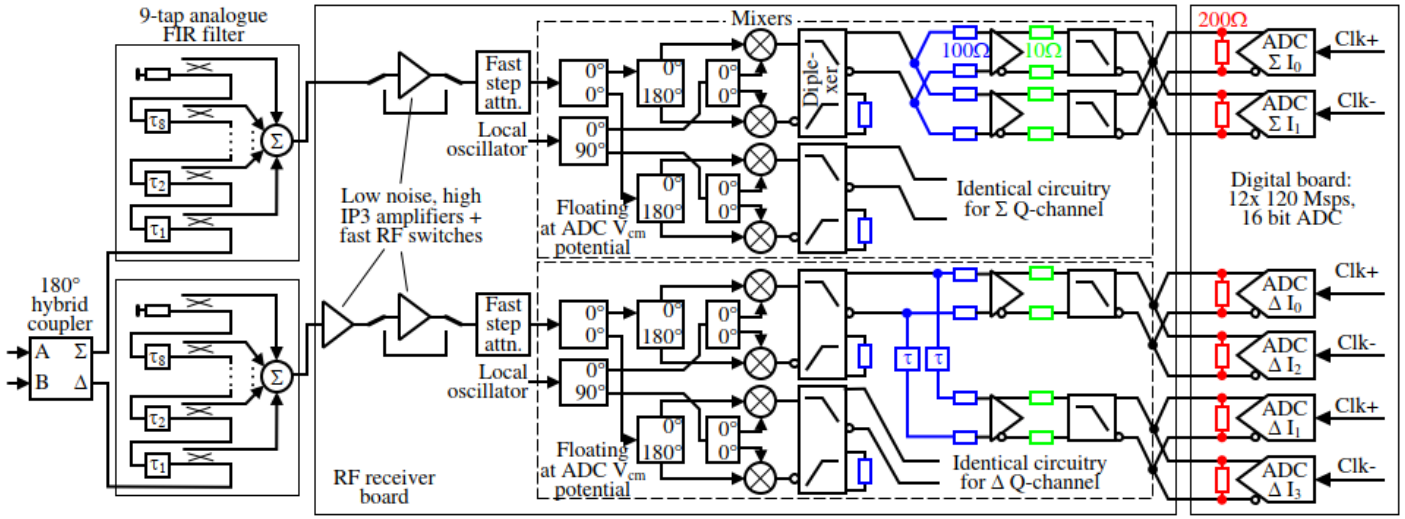

400 MHz, analog down conversion, total of 12 ADCs used
Interleaved sampling with 4 ADCs of the
Δ signal at effective rate of 480 Ms/s

D. Valuch, V. Stopjakova,
IPAC'22, TUPOST007

More than factor 6 improvement

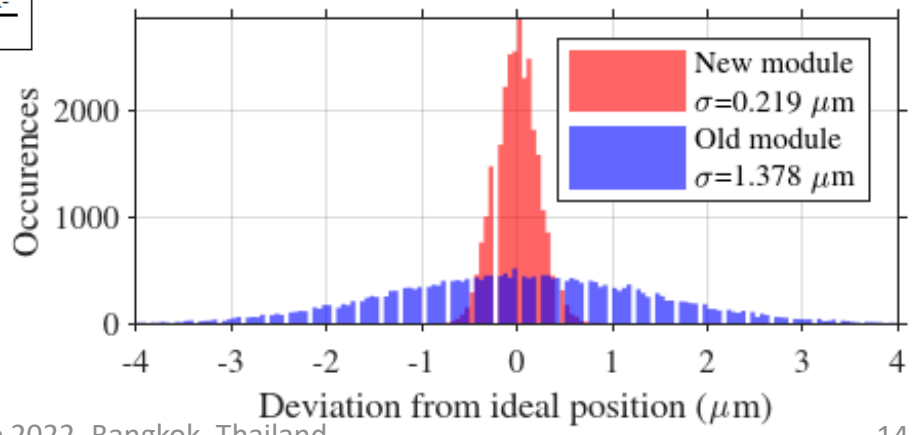

Data from LHC ADT

- Analysis → tune determination from phase advance

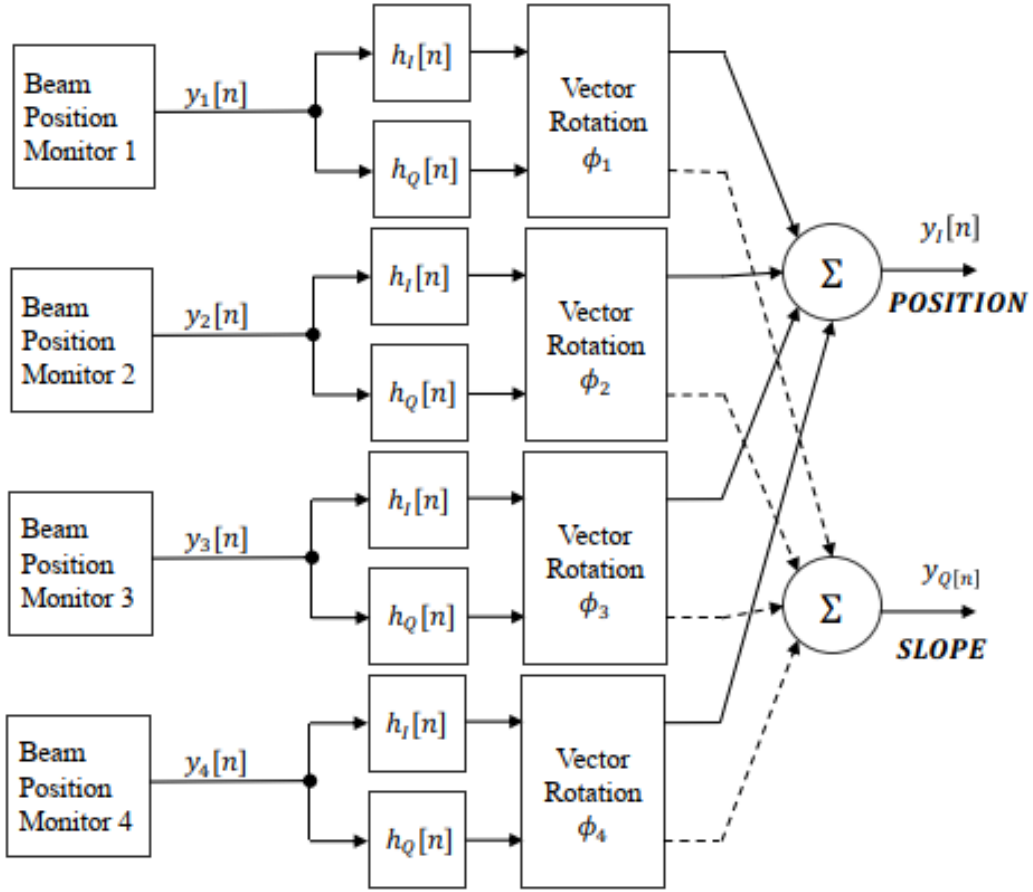

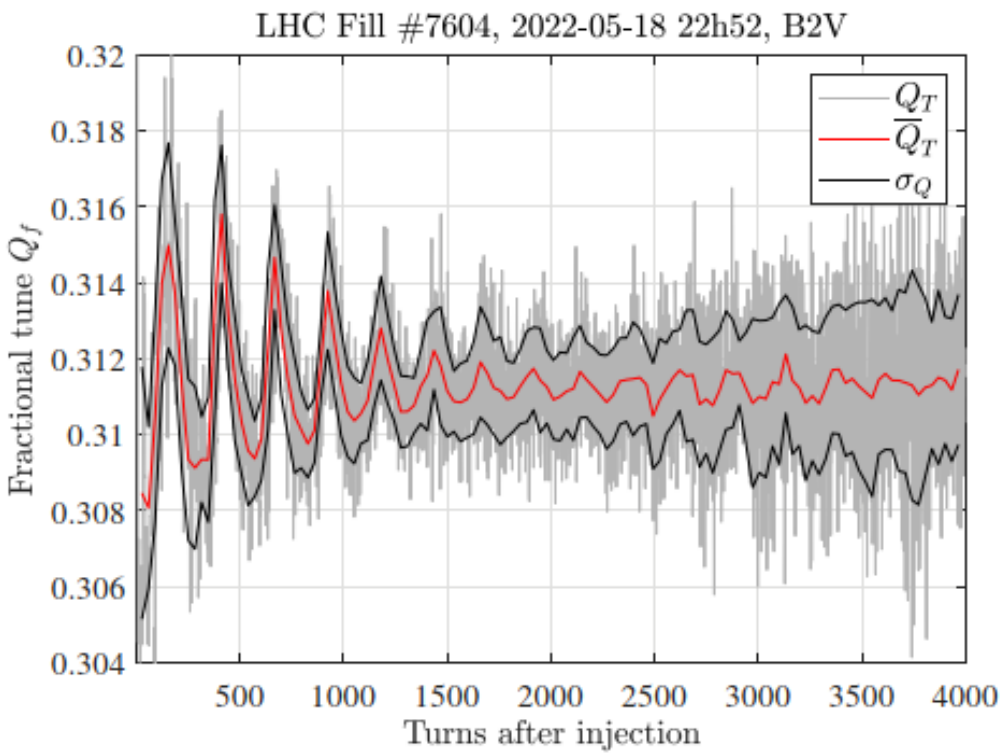

G. Kotzian et al.
IPAC'22, TUPOST037

ADT ObsBox for data recording from feedback

- data recording from feedback systems

	Level-1 Rate (Hz)	Event size (Bytes)	Readout Bandw. (GB/s)	HLT Out MB/s (Events/s)
ALICE (Pb-Pb)	500	5×10^7	25	1250 (10^2)
ALICE (p-p)	10^3	2×10^6	25	200 (10^2)
ATLAS	10^5	1.5×10^6	50	$\approx$ 1000(10^2)
CMS	10^5	10^6	100	$\approx$ 1000(10^2)
LHCb	10^6	5×10^4	50	700 (1.2×10^4)
ADTObsBox	10^4	10^5	2	1280 (10^4)

M. Söderén, D. Valuch
EPJ Web of Conferences 245, 01036 (2020)
CHEP 2019,
https://doi.org/10.1051/epjconf/202024501036

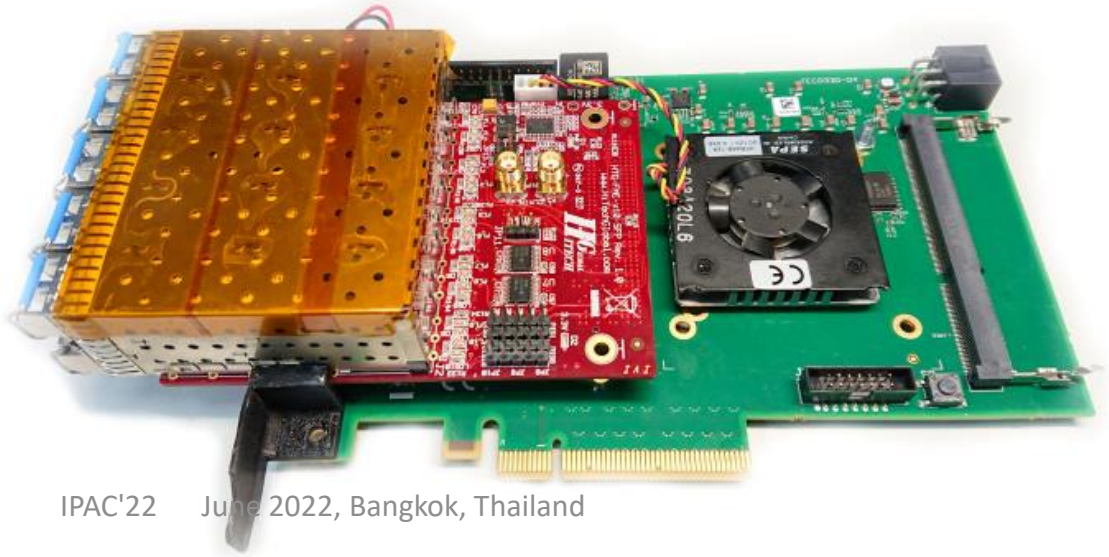

Bunch-by-bunch observation

- Addressed by Obsbox System in LHC

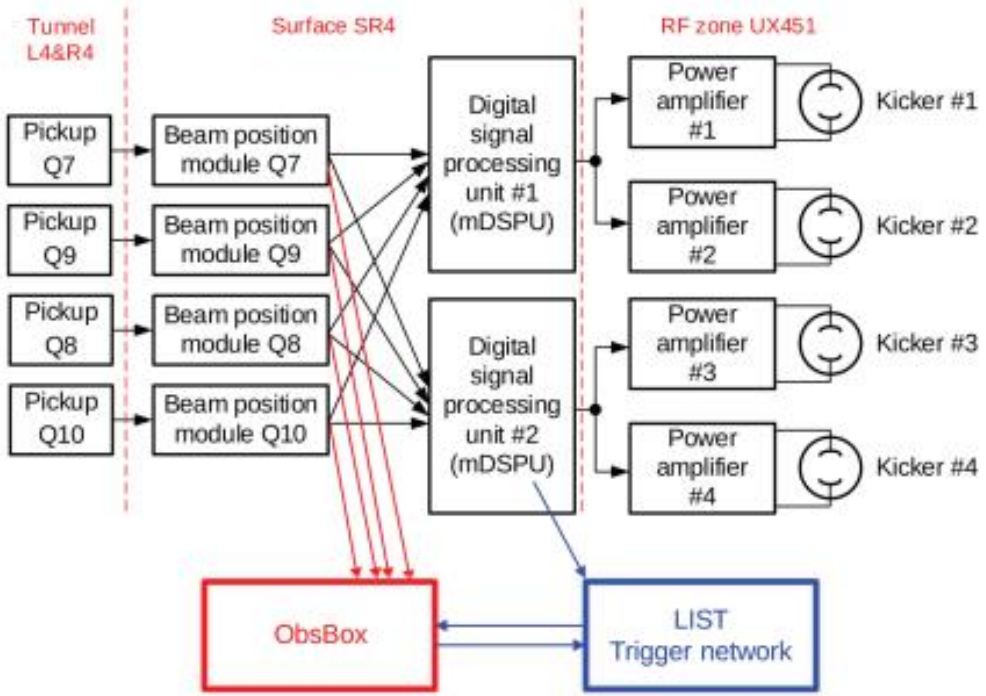

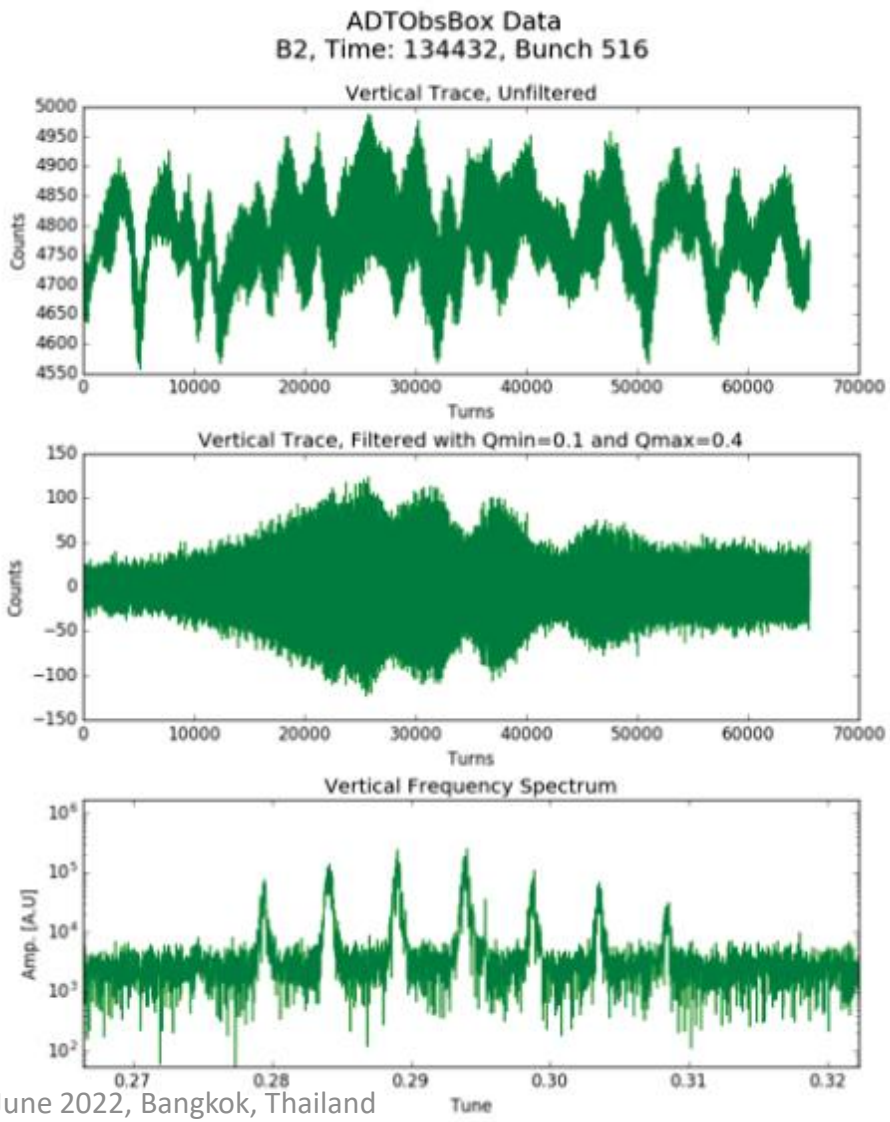

L. Carver et al.
IPAC'17, MOPAB113

user trigger or through events such as detected instabilities

Instabilities in need of damping by feedback

- example of within bunch oscillation and needed bandwidth

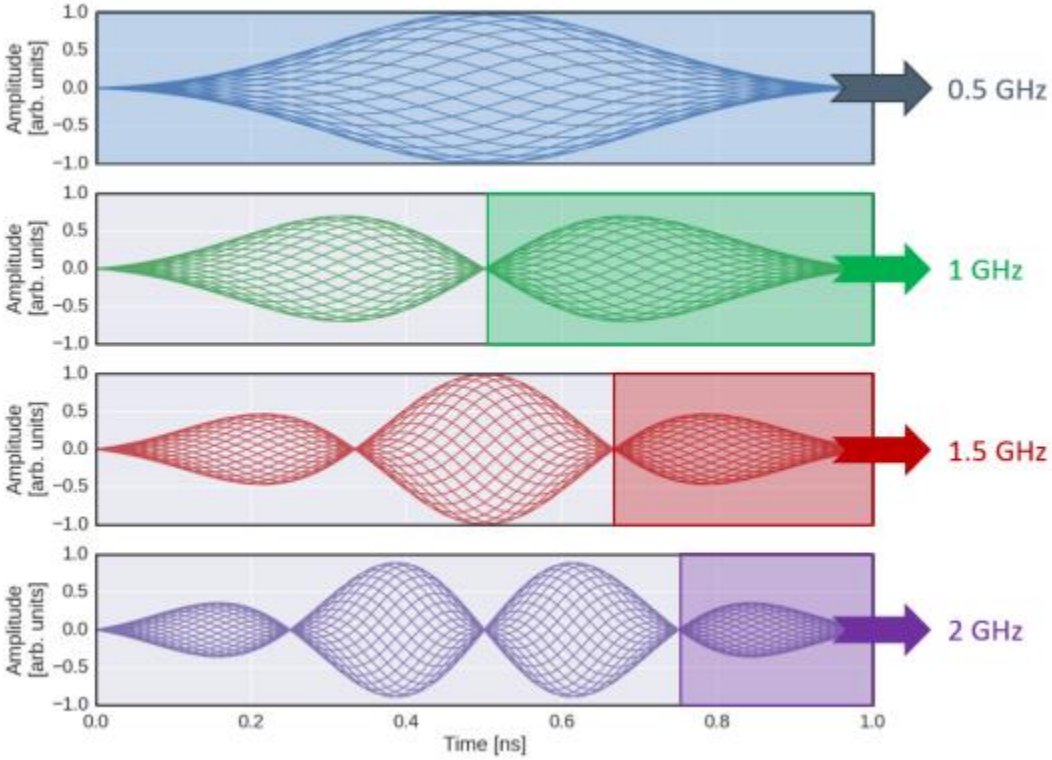

K.S.B. Li et al.
CERN-ACC-Note-2018-0058

band-by-band observation

- Multi-band instability monitor (MIM)
  - amplitude (peak) detection per band versus time

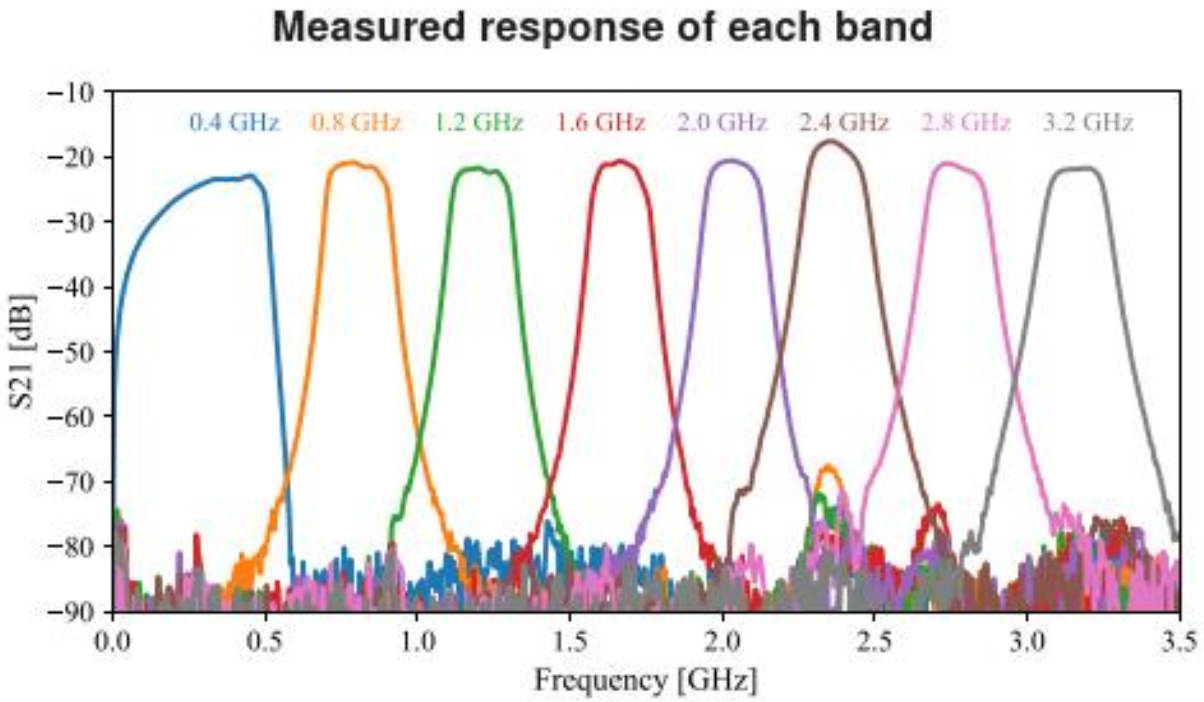

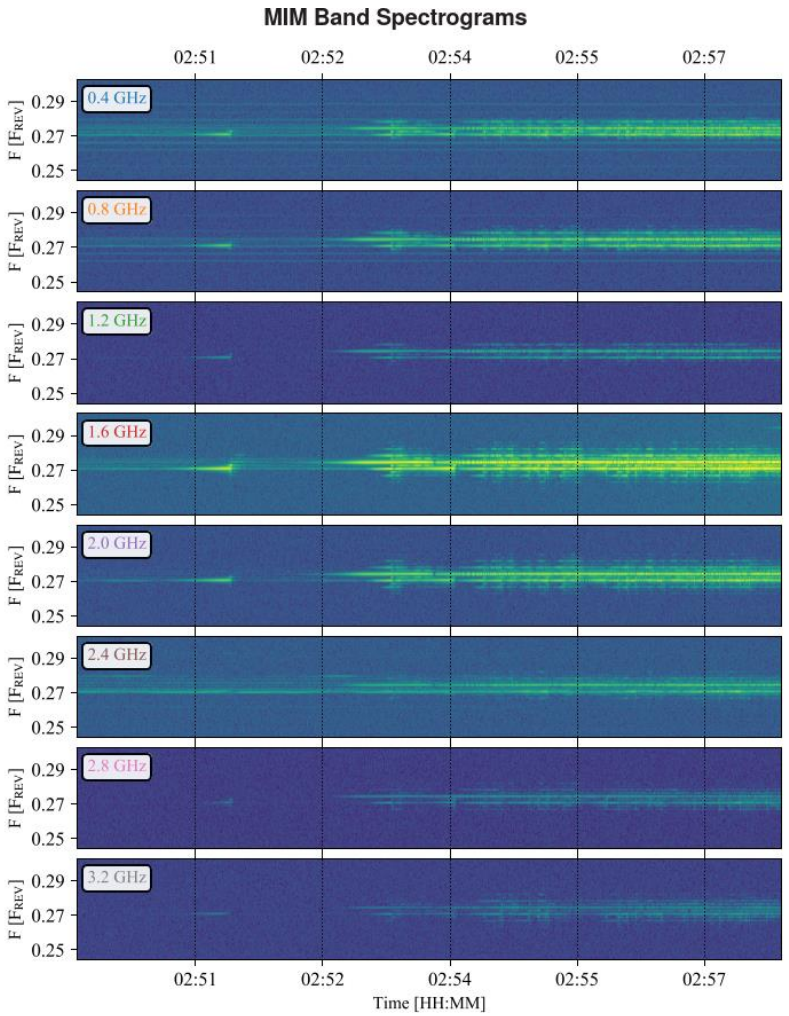

T. Levens et el.,
IBIC 2018, TUPC09

Beam position detection sensitivity to intra bunch motion

- Beam position sensitivity to intra-bunch motion with down modulation at 400 MHz

$$I_\Sigma(t) = k_\Sigma \left[q\lambda(t) \cdot c(t)\right] * g(t)$$
$$Q_\Sigma(t) = k_\Sigma \left[q\lambda(t) \cdot s(t)\right] * g(t)$$

$$I_\Delta(t) = k_\Delta \left\{\left(\frac{x(t)}{d_x} \cdot q\lambda(t)\right) \cdot c(t)\right\} * g(t)$$
$$Q_\Delta(t) = k_\Delta \left\{\left(\frac{x(t)}{d_x} \cdot q\lambda(t)\right) \cdot s(t)\right\} * g(t)$$

$$X_N = \frac{I_\Delta I_\Sigma + Q_\Delta Q_\Sigma}{I_\Sigma{}^2 + Q_\Sigma{}^2} + j\frac{Q_\Delta I_\Sigma - I_\Delta Q_\Sigma}{I_\Sigma{}^2 + Q_\Sigma{}^2}$$

bunch centroid head tail motion

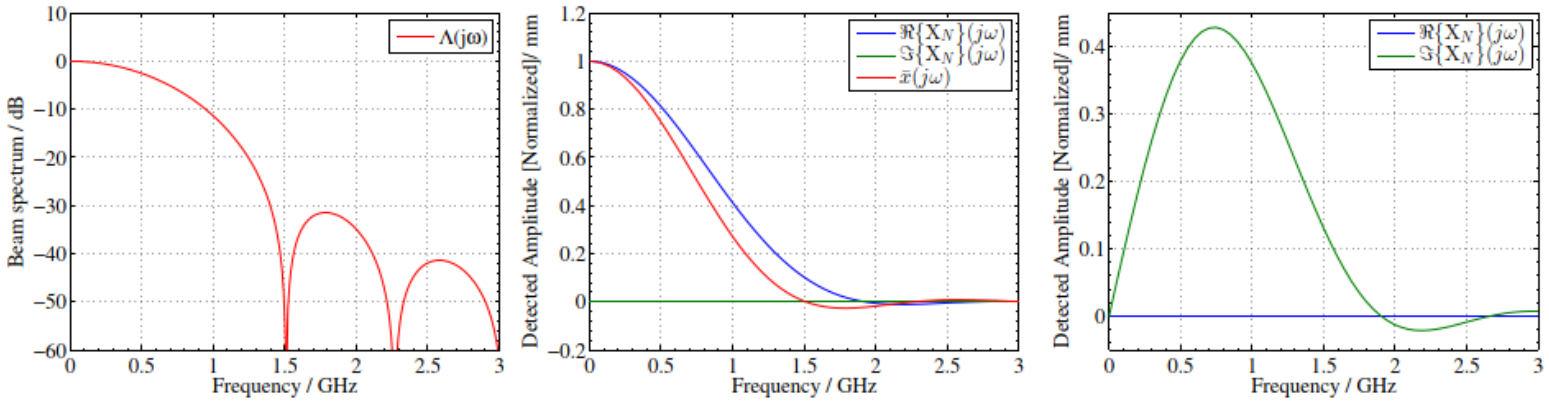

(a) Longitudinal profile $\lambda(f)$. (b) Even-symmetric excitation. (c) Odd-symmetric excitation.

study relevant for planned crab cavity noise feedback

G. Kotzian et al., IPAC'17, TUPIK093

Intra-bunch feedback developments

- Push to shorter bunch lengths to GHz range
- band-by-band versus brute force sampling
  - separation of kickers for different bands
  - mode decomposition after direct sampling
    - O. Turgut et al., IPAC'16, THOAA01, C.H. Rivetta et al. IBIC'21, FROA01

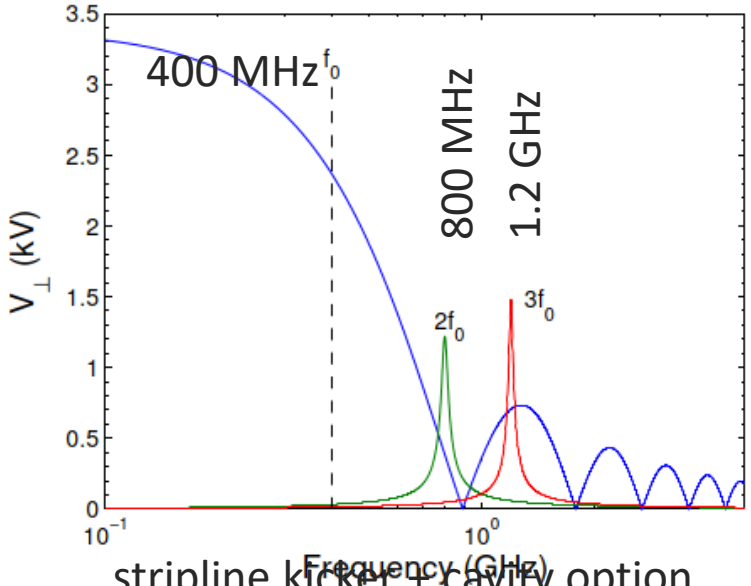

stripline kicker + cavity option

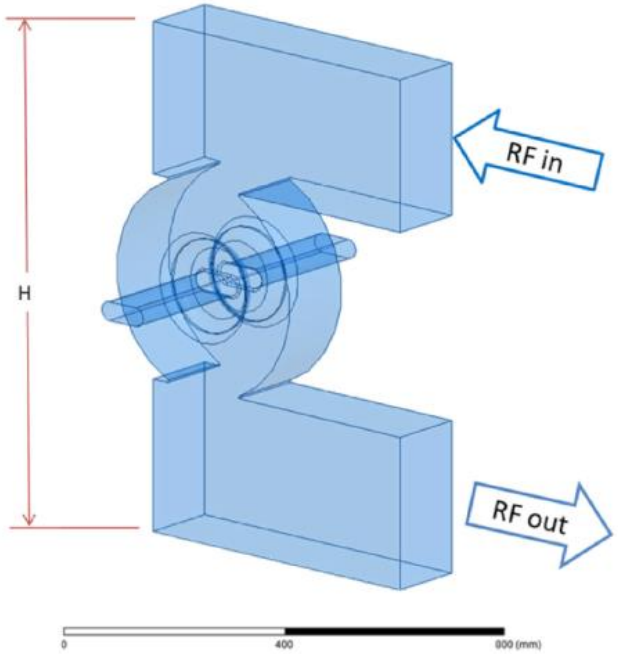

cavity 400 MHz: H=1.0 m
cavity 1.2 GHz: H= 0.6 m
Low Q for bunch-by-bunch modulation (25 ns, 40 MHz)

J. Cesaratto
CERN-ACC-Note-2013-0047
SLAC-R-1037

Kickers built for SPS wideband feedback

- Built and installed in SPS

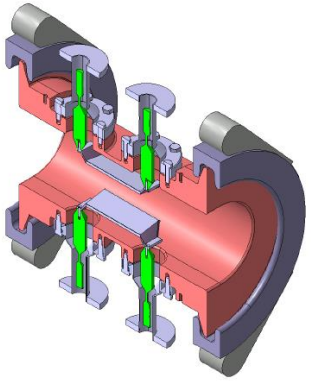

Strip-line kicker

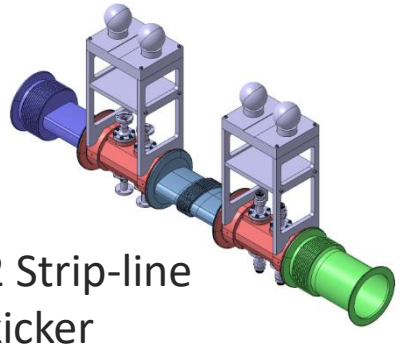

2 Strip-line kicker as installed

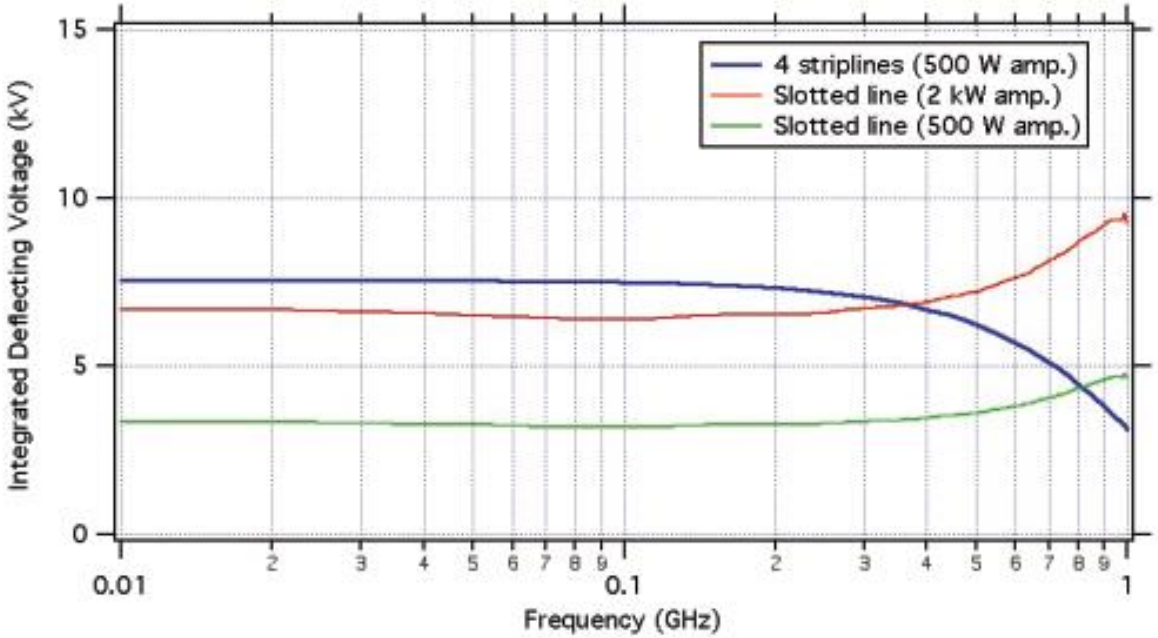

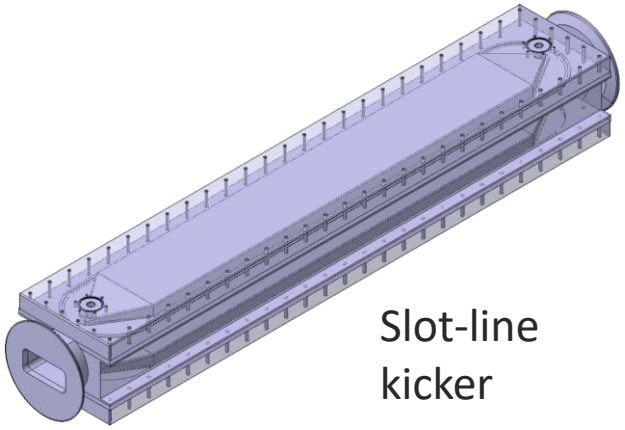

Slot-line kicker

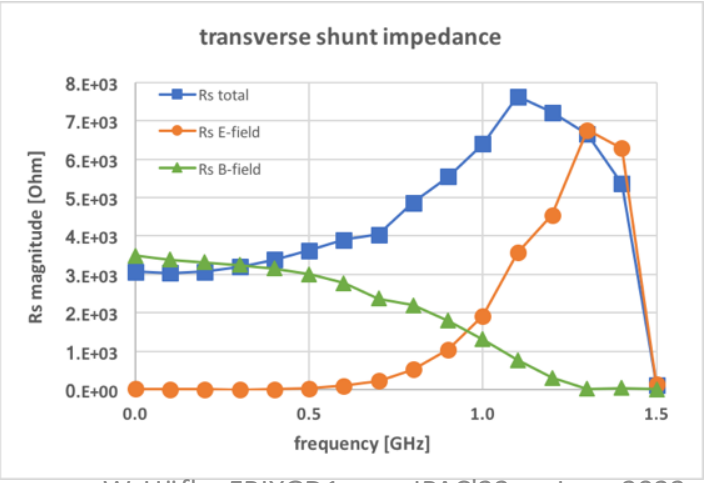

Invented originally for stochastic cooling by **L. Faltin** at CERN:
Nucl. Instrum. Methods 148, 449 (1978)
optimised design for SPS:
J. Cesaratto, IPAC'13, WEPME061
M. Wendt et al. :
as built see IPAC'17 TUIK053

SPS Wideband feedback kicker

- Technology for Faltin kicker

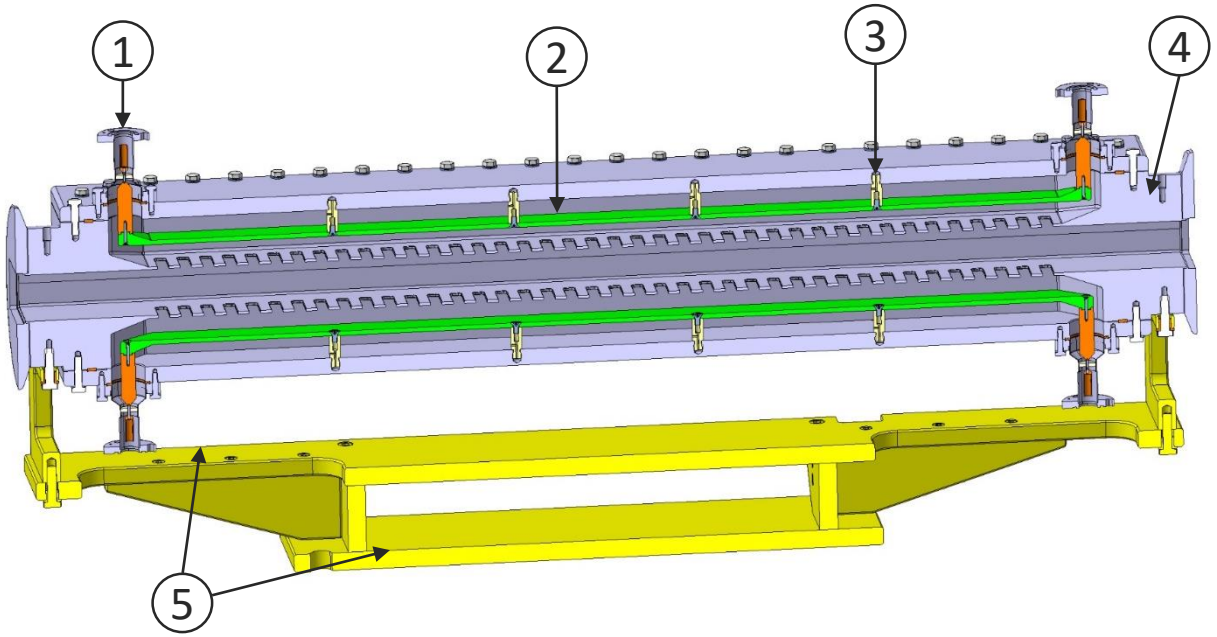

1. Feedthrough (5 kW)
2. Electrode (Cu)
3. Supports (shapal)
4. Body & cover (316 LN / 304 L)
5. Supports

$$R_{\perp}T^2 = \frac{V_{\perp}^2}{2P_{\mathrm{tot}}}$$

Transverse shunt impedance 3-8 kΩ (vertical) up to 1 GHz (for 1 m)

Slotline kicker SPS (Faltin-type)

- GHz bandwidth kicker

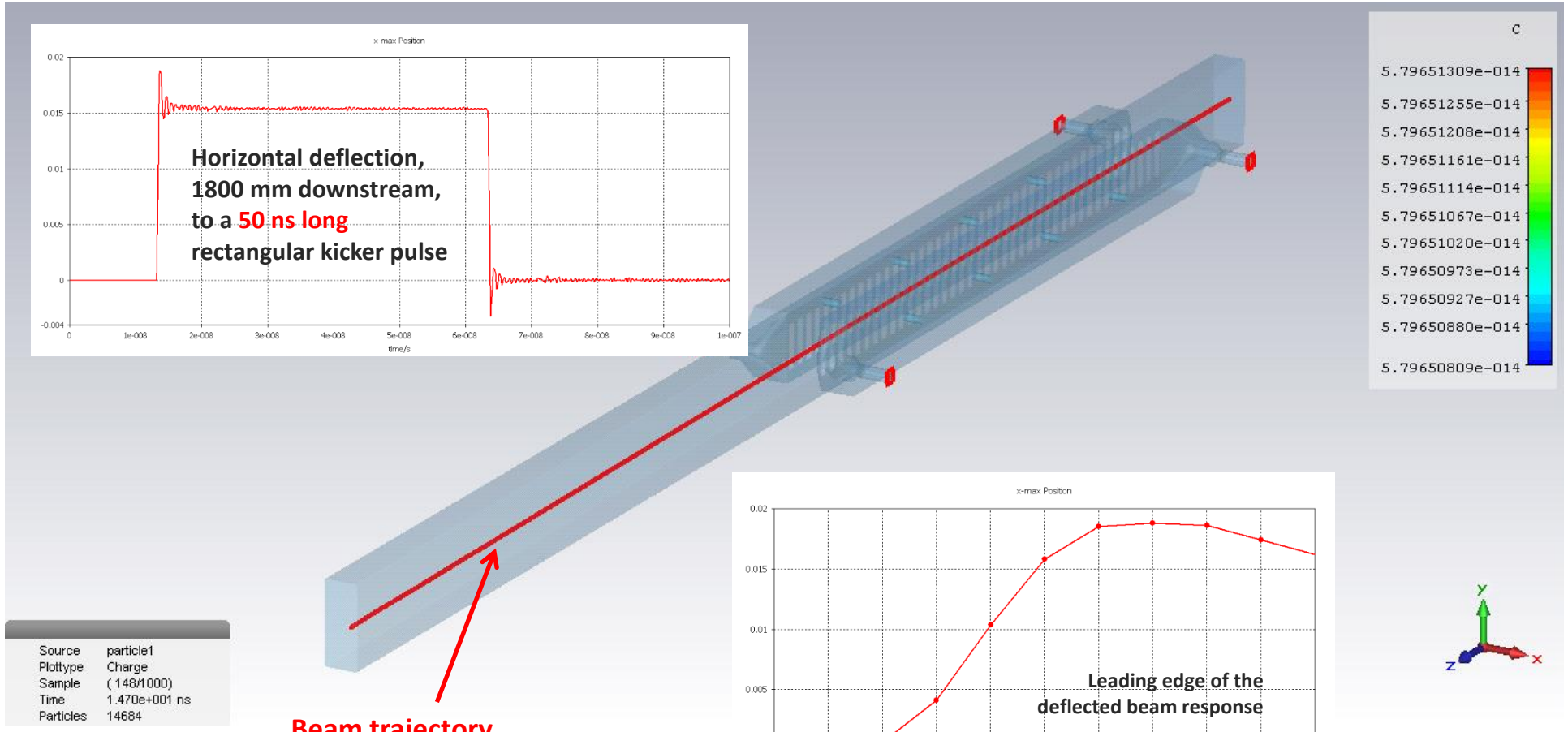

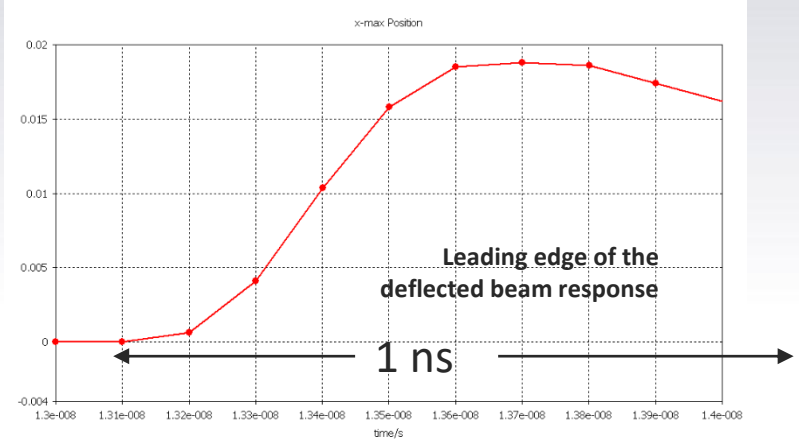

response faster than 5 ns

kicker can target individual bunches @ 5 ns spacing !

installed in SPS

enormous value beyond high bandwidth feedback

Simulation: M. Wendt
IPAC'17 TUIK053

SPS Wideband Feedback processor - technology

- Prototype system could be used to excite beam and in feedback mode

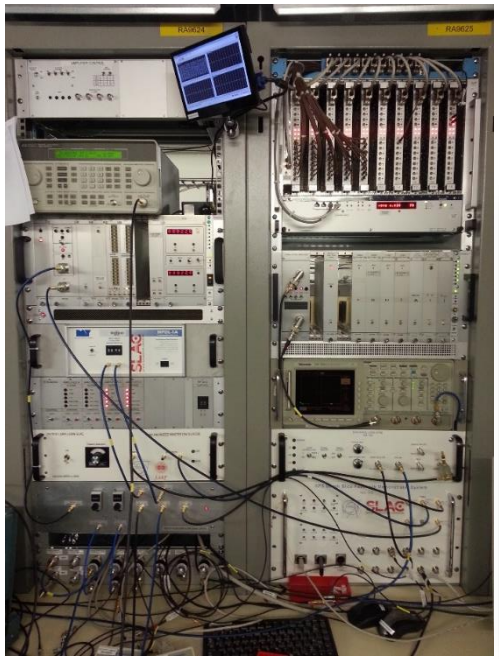

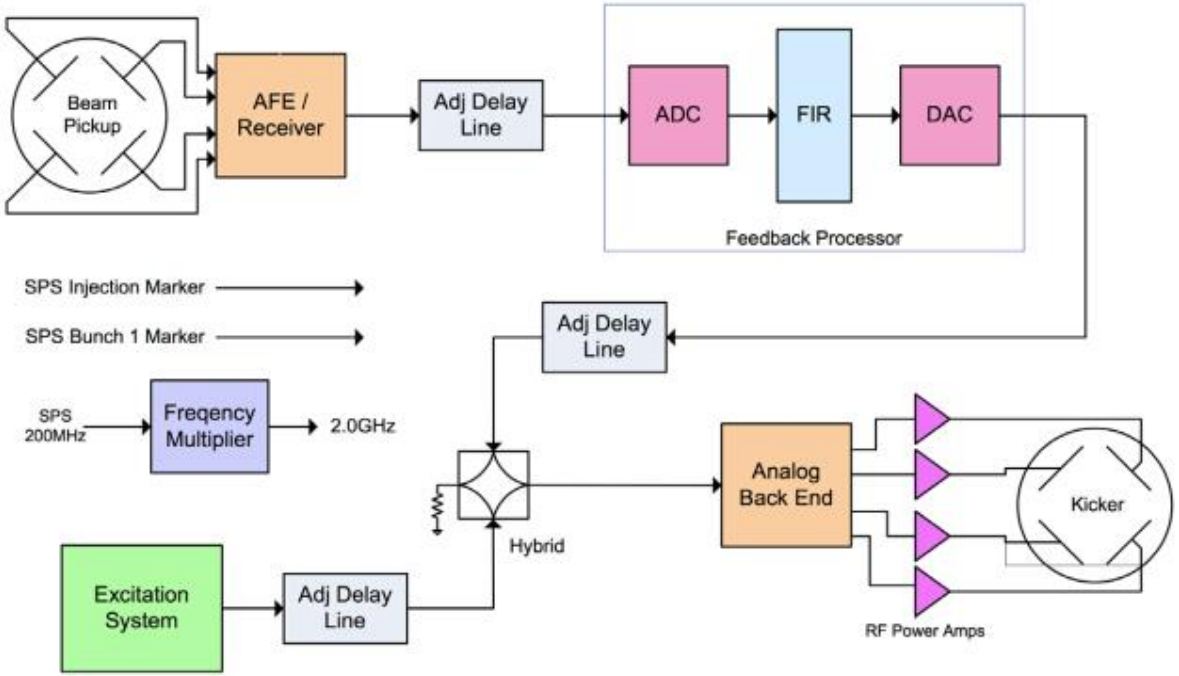

Overall System Block Diagram: **Feedback** and Excitation Systems

- 4 GS/s ADC/DAC with proposal to move to 8 GS/s
- reconfigurable controller on FPGA board
- synchronised to SPS RF clock at 26 GeV/c
- careful phase and amplitude equalization in analog receiver
- possibility to remove slowly varying offset before digitization

J. Dusatko, IPAC'18, WEPAF073
J. Platt et al. NIM A 868 (2017) pp. 93-97
G. Kotzian, IBIC'13, WEPC12

Results SPS: Grow - damp experiments SPS

- Grow damp experiments with intra-bunch feedback

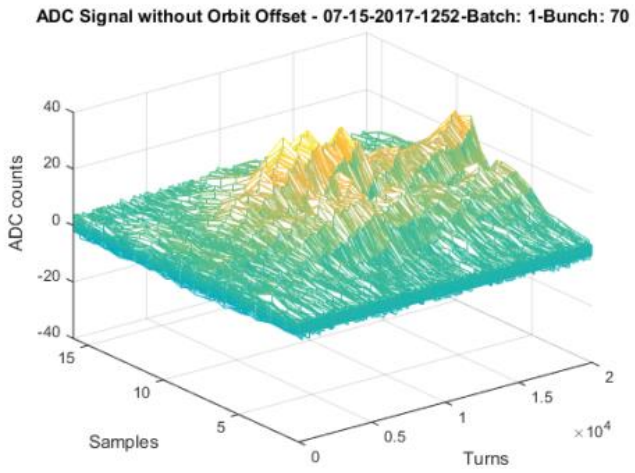

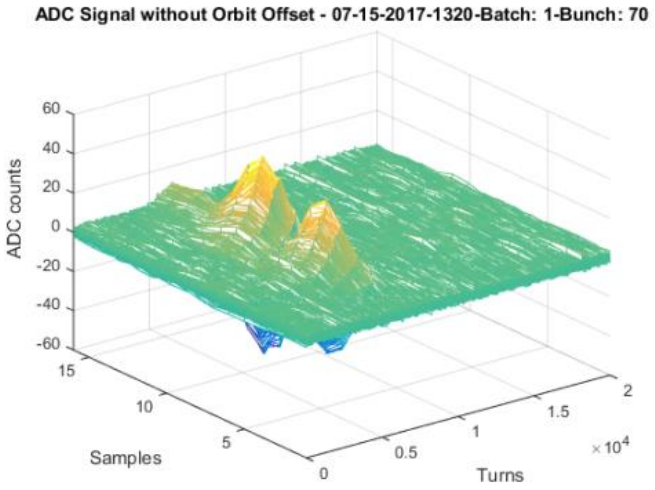

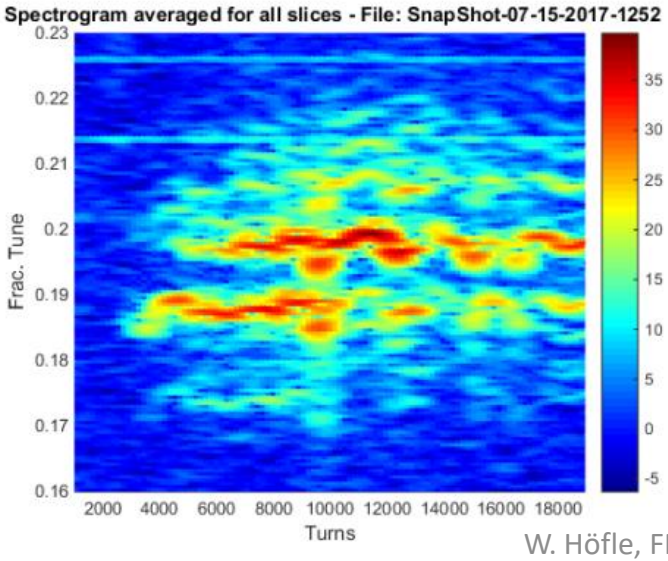

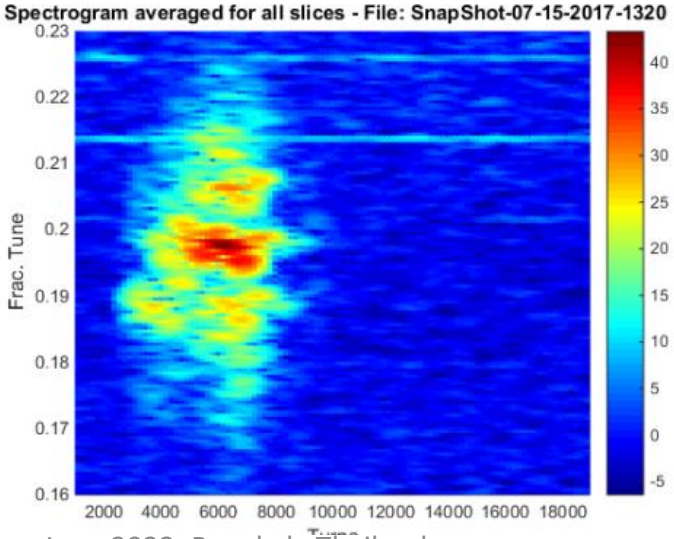

J. D. Fox et al.
IPAC'18, WEPAL079

Demonstration in SPS

- Demonstration in SPS, Q22 and Q26 optics

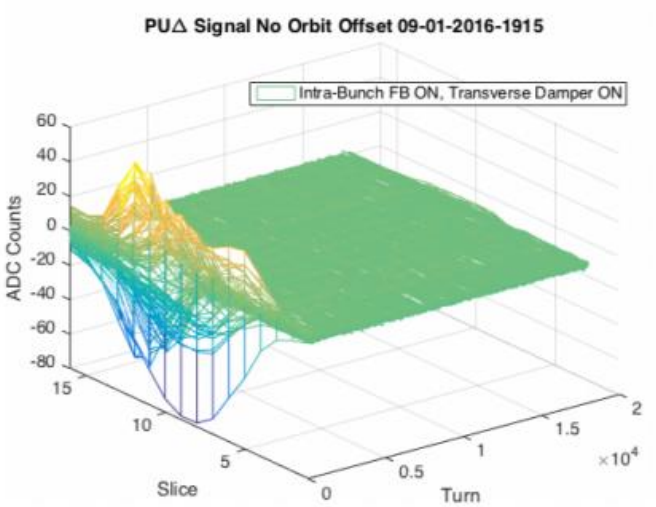

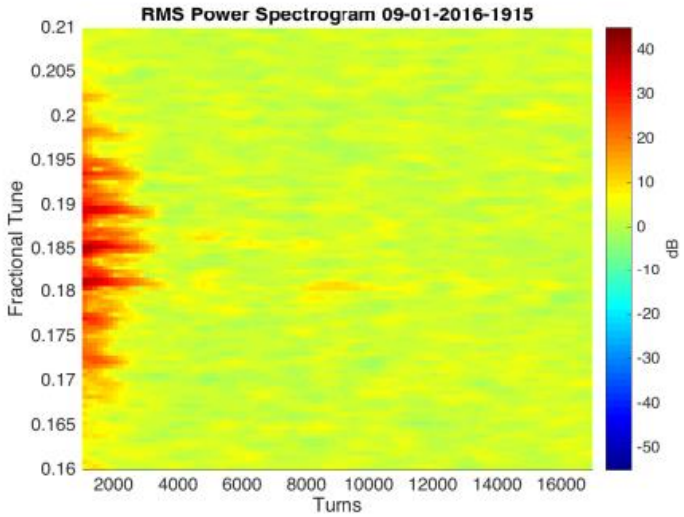

J. D. Fox, IPAC'17, TUPIK119

Q26, 2×10^{11} per bunch, injection transient with feedback on

W. Höfle et al. IPAC'18, TUZGBD4

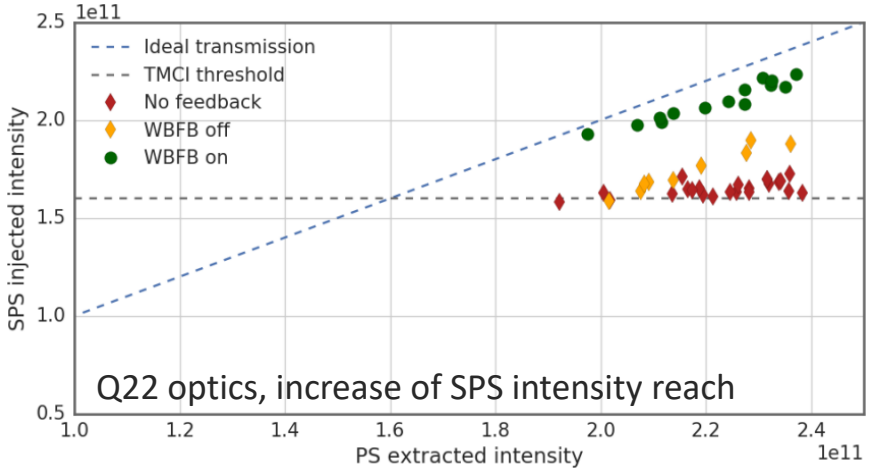

Q20 optics chosen for LIU upgrade
→ Injection energy well above transition, consequently TMCI instability threshold raised to above intensities needed for transfer to LHC
→ wideband feedback not baseline

Modelling studies SPS

- Modelling studies

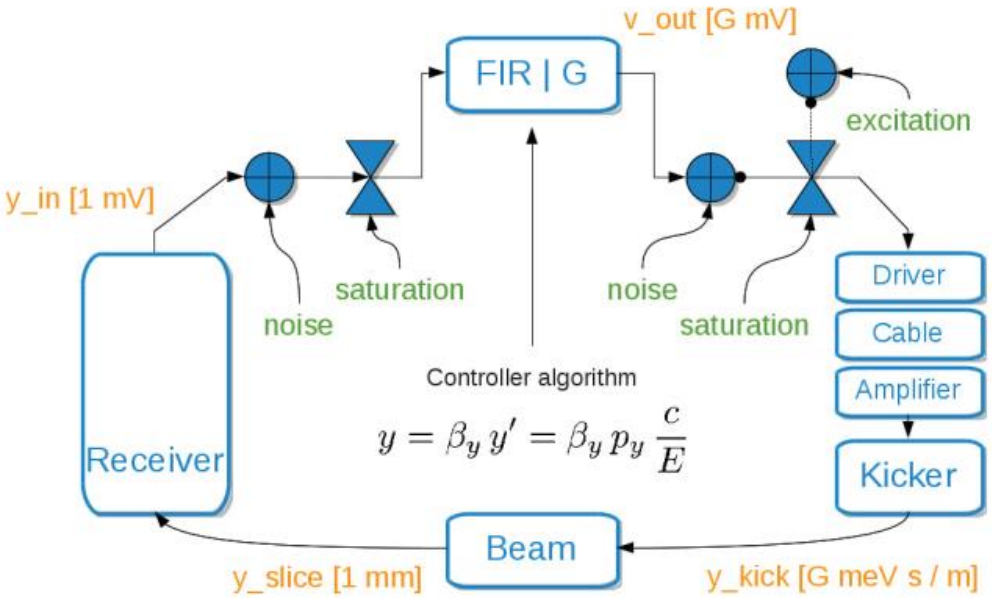

K. S. B. Li,
IPAC'13, WEPME042
J. Komppula et al.,
IPAC'17, TUPIK091

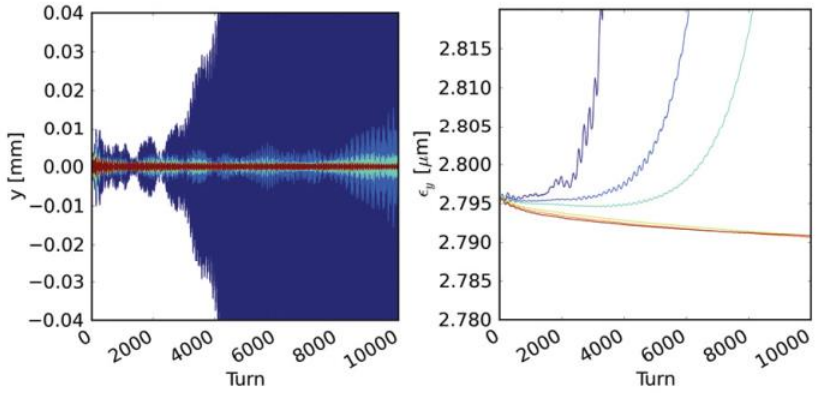

(a) 200 MHz feedback system

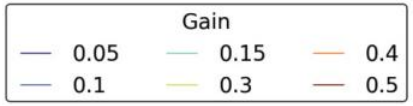

TMCI mitigation

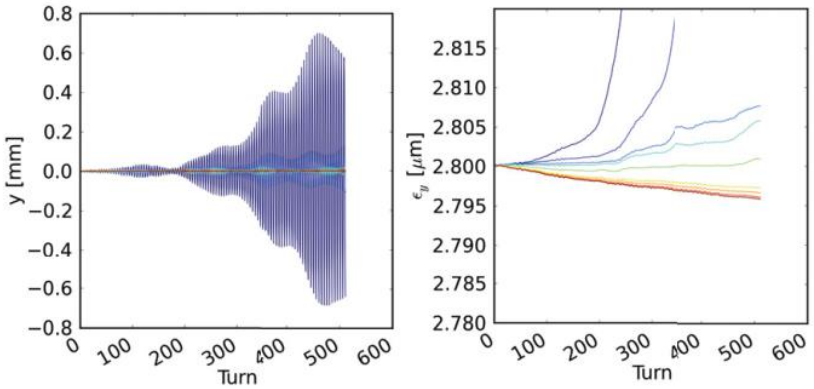

(b) 500 MHz feedback system

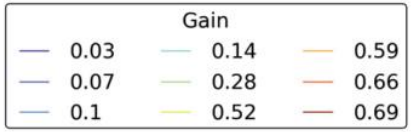

ecloud instability mitigation

Modelling Studies for LHC

- study for wideband feedback for LHC

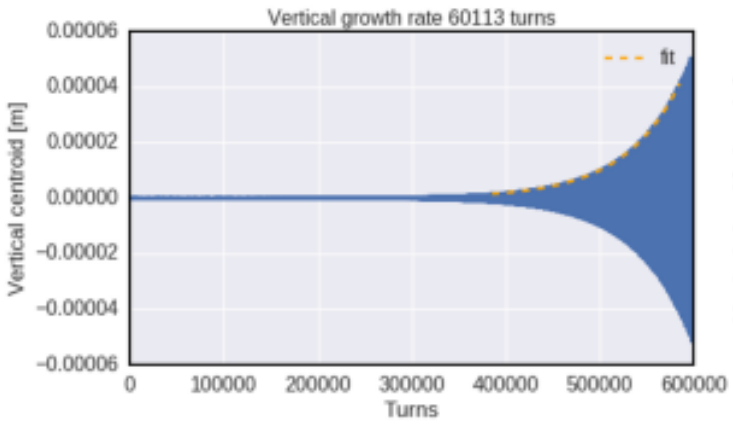

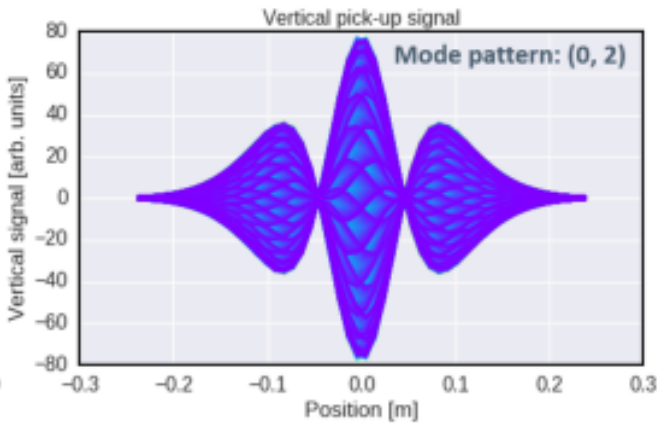

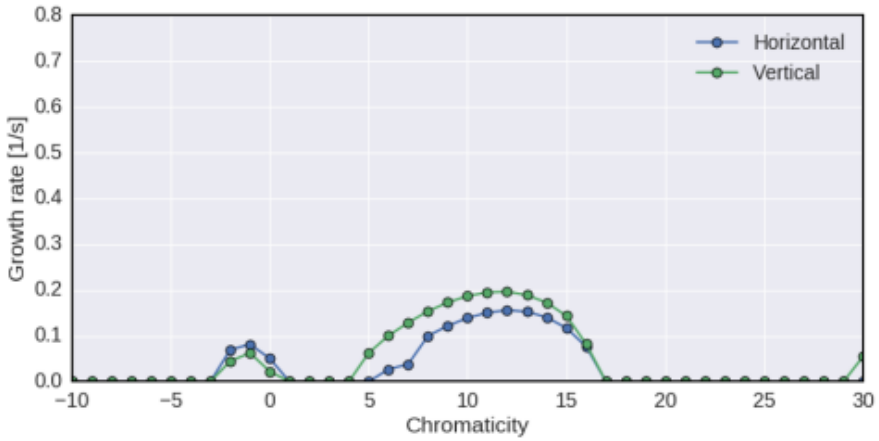

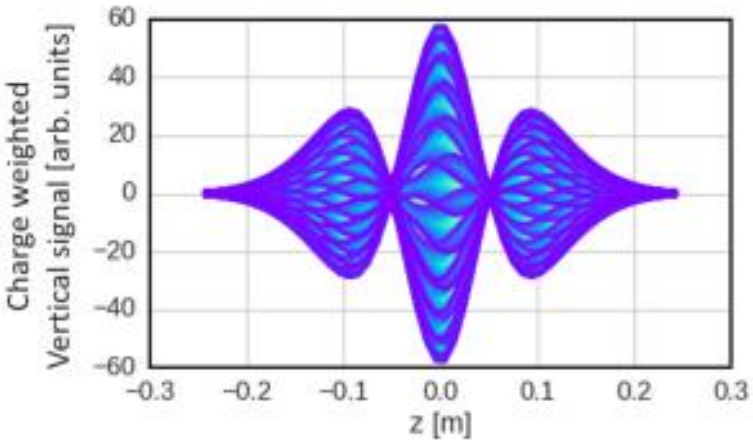

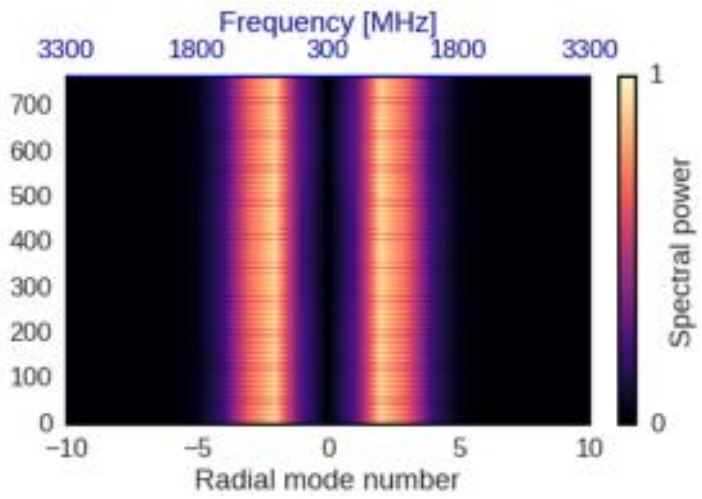

K.S.B. Li
CERN-ACC-Note-2018-0058

Study for LHC

- study for wideband feedback for LHC

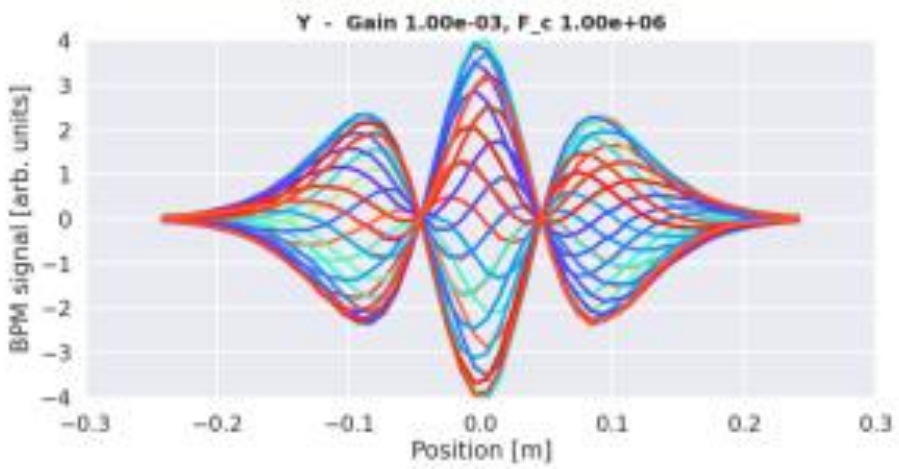

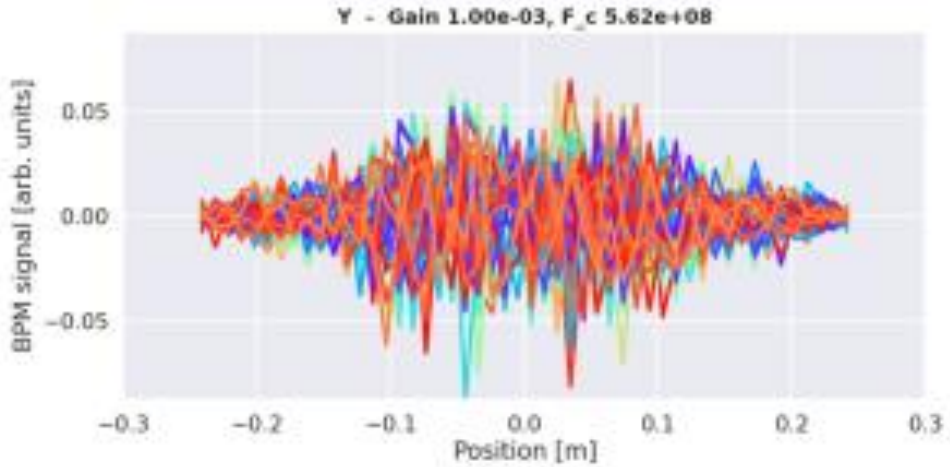

600 MHz feedback

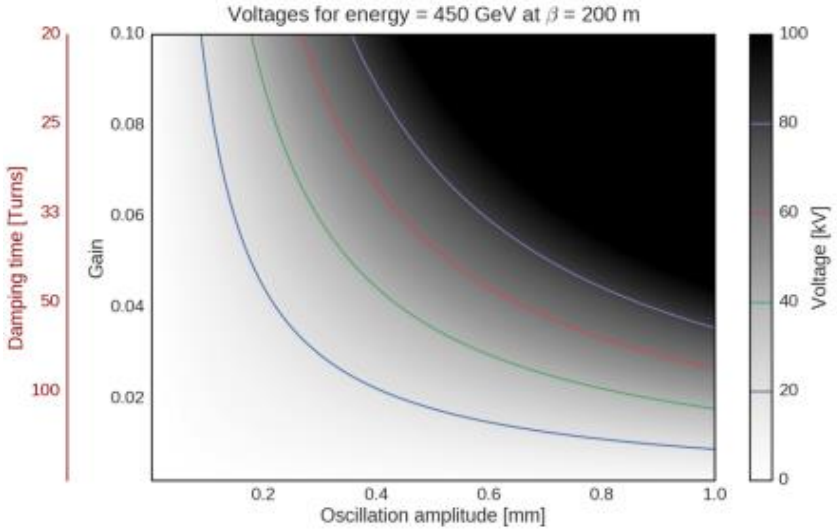

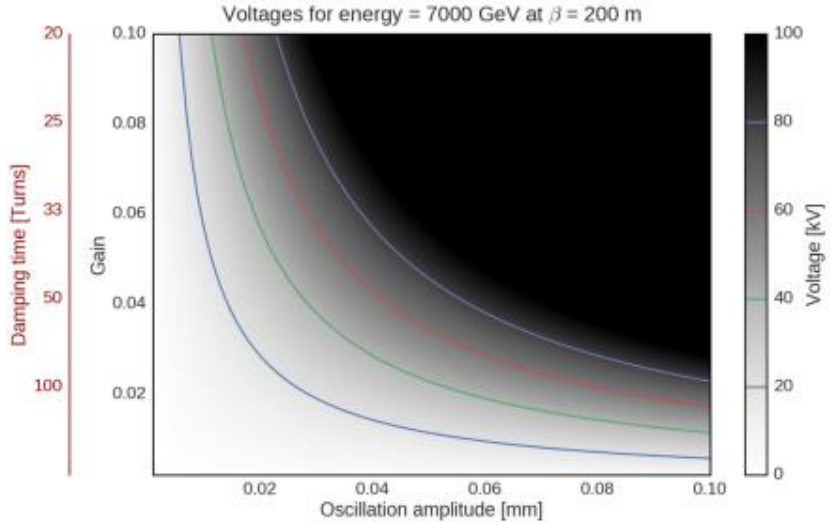

K.S.B. Li
CERN-ACC-Note-2018-0058

Conclusion

- SPS Wideband feedback prototyping demonstrated that intra-bunch feedback is practically feasible in the GHz range at rates of multiple Gs/s
- design estimates for systems in SPS and LHC were made
- these fast feedbacks are a power tool for diagnostics as well
- technology waiting for an opportunity of an instability becoming limiting
- when designing pick-ups and kickers future bandwidth upgrades should be folded in
- kicker and pick-up design synergies with stochastic cooling systems to be explored, exploration of cavity type kickers and pick-ups interesting
- potential candidate for next project at CERN is LEIR, the low energy ion ring (consolidation, new digital system needed)
  - synergies possible with ion facilities under design and construction (FAIR, HIAF, ...)

Acknowledgements

CERN transverse feedbacks and international WBFS collaboration

G. Arduini, H. Bartosik, N. Biancacci, G. Iadarola, G. Kotzian, K.S.B. Li, L. Mether, E. Métral, E. Montesinos, G. Rumolo, B. Salvant, M. Schenk, M. Söderén, P. Solvang, G. Sterbini, D. Valuch

CERN, Geneva, Switzerland

J. D. Fox, Stanford University, Stanford, USA
J. Cesaratto (Toohig Fellow), J. Dusatko, J. Olsen, C. Rivetta, O. Turgut,

SLAC, Menlo Park, USA

S. De Santis, M. Furman, J.-L. Vay, LBNL, Berkeley, USA

A. Drago, INFN-LNF, Frascati and Tor Vergata University, Rome, Italy

A. Alesini, S. Caschera, A Gallo, INFN-LNF, Frascati, Italy

M. Tobiyama, KEK, Tsukuba, Japan

CERN

www.cern.ch

Wideband feedback system for LIU-SPS with SLAC

courtesy K. Li

- The project is essential to acquire expertise on:
  - How to numerically model and study wideband feedback systems for mitigation of intra-bunch coherent motion
  - Prototyping of high speed electronics (4Gs/s digital signal processing system) & exploration of control algorithms

Q26 - FIR

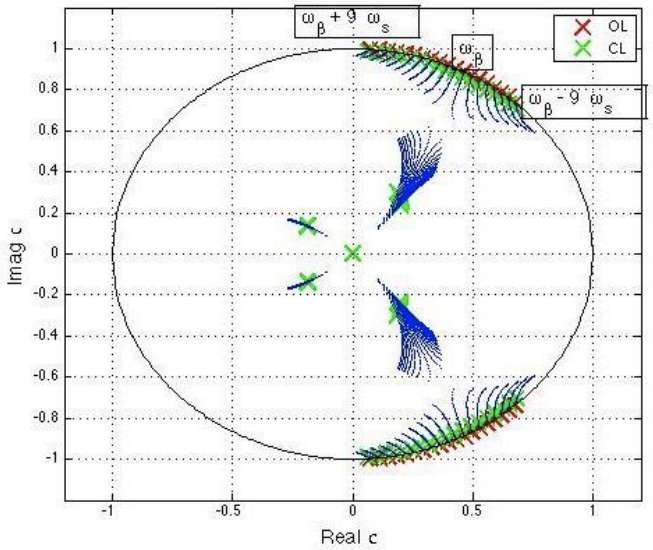

Q20 - IIR

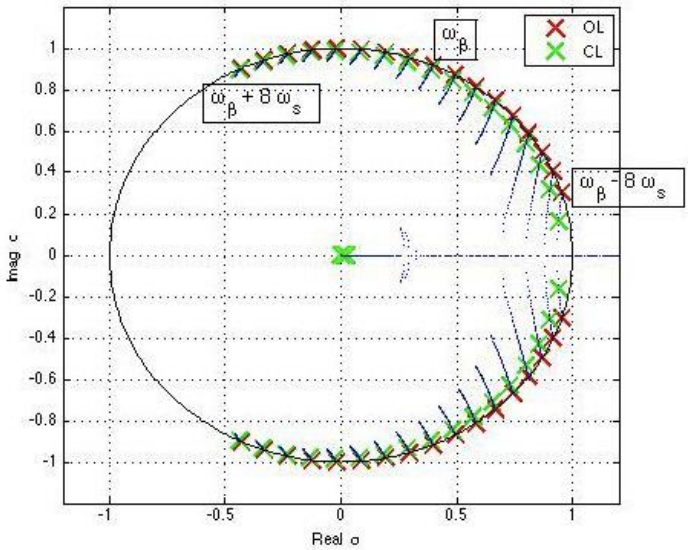

The fast synchrotron motion in the Q20 optics of the SPS is especially challenging due to the required extended controller bandwidth

- Experience has been gained using different filter types to balance flat phase response and effective noise suppression for single and multi-bunch control
- Root-locus analysis to study closed loop transfer functions, time-domain behaviour, stability

→ Expected to be less challenging for LHC/HL-LHC (lower Qs)

J. Fox, C. Rivetta et al., IBIC 2015

Wideband feedback system for LIU-SPS with SLAC

courtesy K. Li

- The project is essential to acquire expertise on:
  - How to numerically model and study wideband feedback systems for mitigation of intra-bunch coherent motion
  - Prototyping of high speed electronics (4Gs/s digital signal processing system) & exploration of control algorithms

Q20 – examples of FIR filters

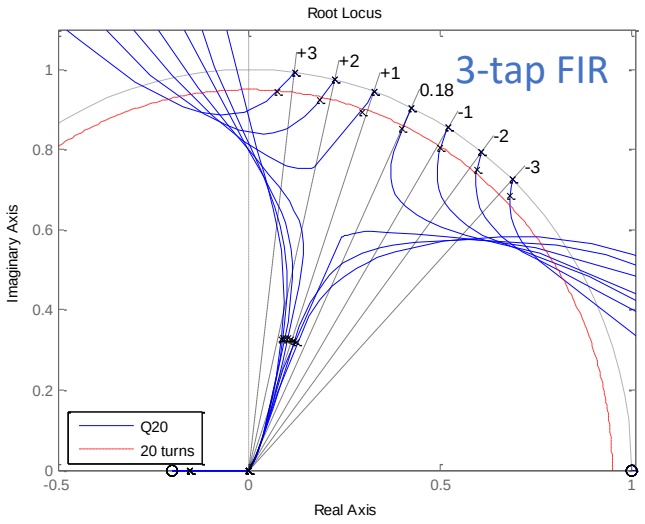

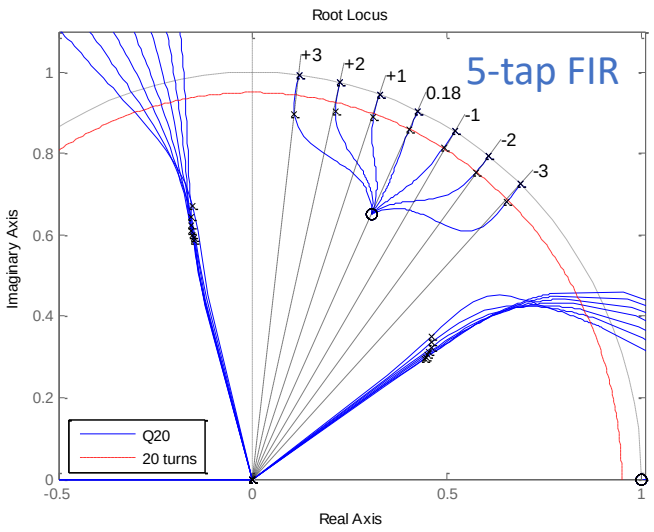

The fast synchrotron motion in the Q20 optics of the SPS is especially challenging due to the required extended controller bandwidth

- Experience has been gained using different filter types to balance flat phase response and effective noise suppression for single and multi-bunch control
- Root-locus analysis to study closed loop transfer functions, time-domain behaviour, stability

→ Expected to be less challenging for LHC/HL-LHC (lower Qs)