AEPA pick-up & VEVY Chamber Impedance

Michael Stephen Sullivan

06/09/2022

Outline

- AEPA pick-up
  - Overview of component
  - CST model and Impedance simulations
  - Possible modifications
- VEVY chamber
  - Overview of component
  - CST model and Impedance simulations
  - Options for exchange → optimal chosen for impedance reduction
  - Proposal for ECR

The phase pick-up

- The phase pick-up provides information about the phase of the main RF accelerating frequency component on the beam, information which is used in the phase correcting loops of the low-level RF system.

- Designed as a fixed tuned low-Q resonator based on a re-entrant cavity design with a ceramic gap. The low-Q value is obtained by using large rectangular loops which provide strong coupling.

- Four loops are symmetrically installed in the cavity, one loops is needed to provide the signal, the others are terminated in 50 Ω loads.

- There are currently four pick-ups installed in the SPS:
  - AEPA.33404
  - AEP.31799
  - AEPC.31801
  - AEPA.31804

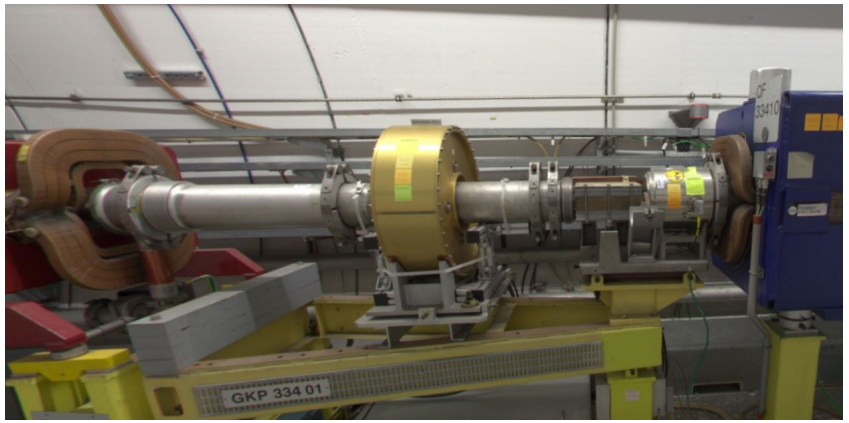

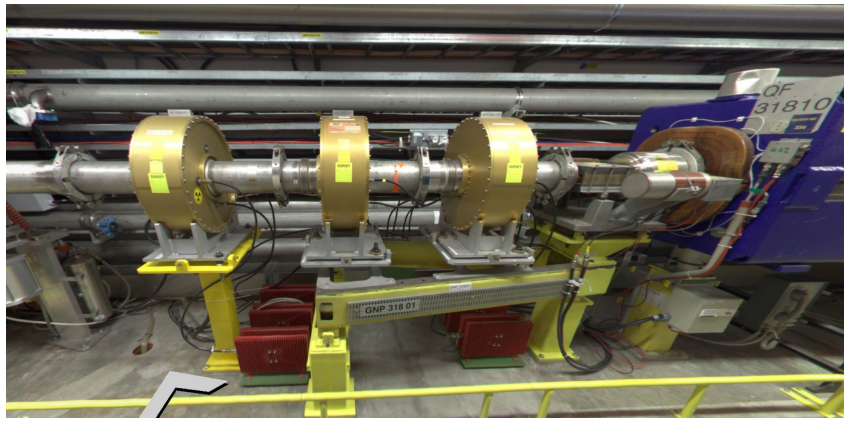

CST Model

- CST model of the AEPA, however the internal geometries of the AEP and AEPC are the same.

- Outer casing is Anticordial 100, the ceramic is alumina and the loops are copper.

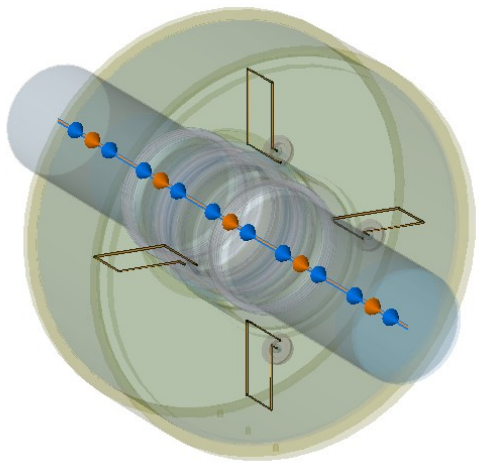

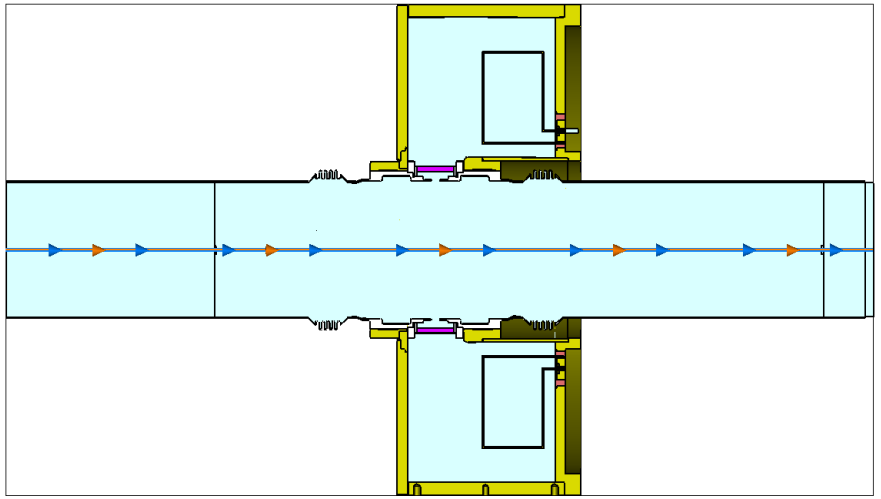

- Wave ports at the loops coaxial lines are terminated in 50 Ω. Dummy vacuum are needed due to three mesh cells required at outgoing wave ports. Boundary conditions were checked at these ports and fields were terminating as expected.

- Eigenmode simulations were performed and compared against reported parameters from the design report [1].

Parameter	Design (calculated)	Design (Measured)	CST
$\omega/2\pi$ (MHz)	N/A	199.95	194.44
Loaded Q	N/A	63.5	66.1
Unloaded Q	N/A	2576	2320
R/Q	25	37.17	32.32

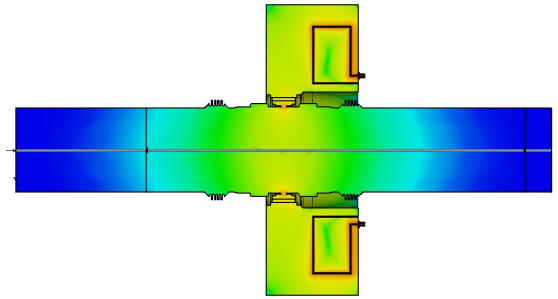

[1] Linnecar, T. 1978. The high frequency longitudinal and transverse pick-ups used in the SPS. CERN-SPS-ARF-78-17.

Impedance

- A beam sigma of 40 mm was used where the wakefield was calculated up to a wakelength of 1500 km. The mesh was increased until no significant changes in the results were seen (and allowed by resources).

- The impedance peak at 194.54 MHz agrees with the frequency found by the Eigenmode solver.

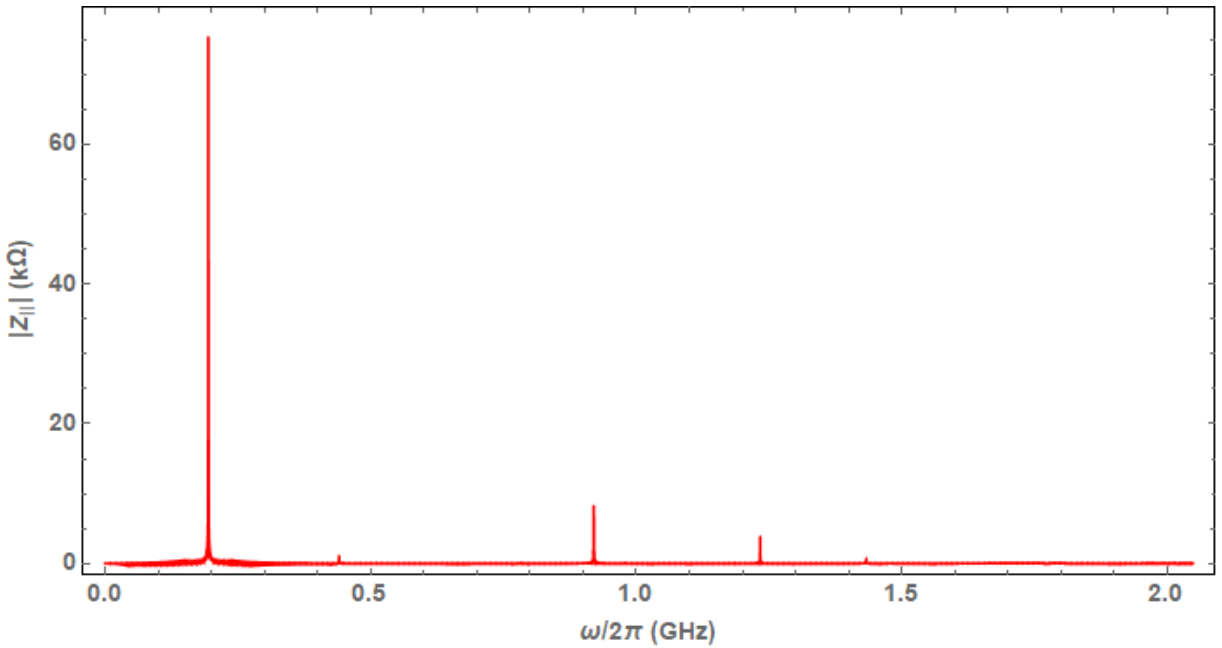

- The impedance could be reduced by replacing the sharp transitions around the pick-ups with tapers.

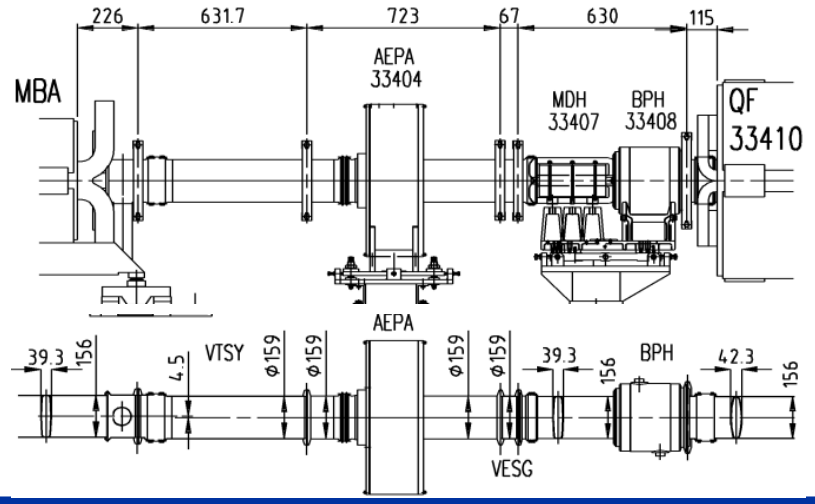

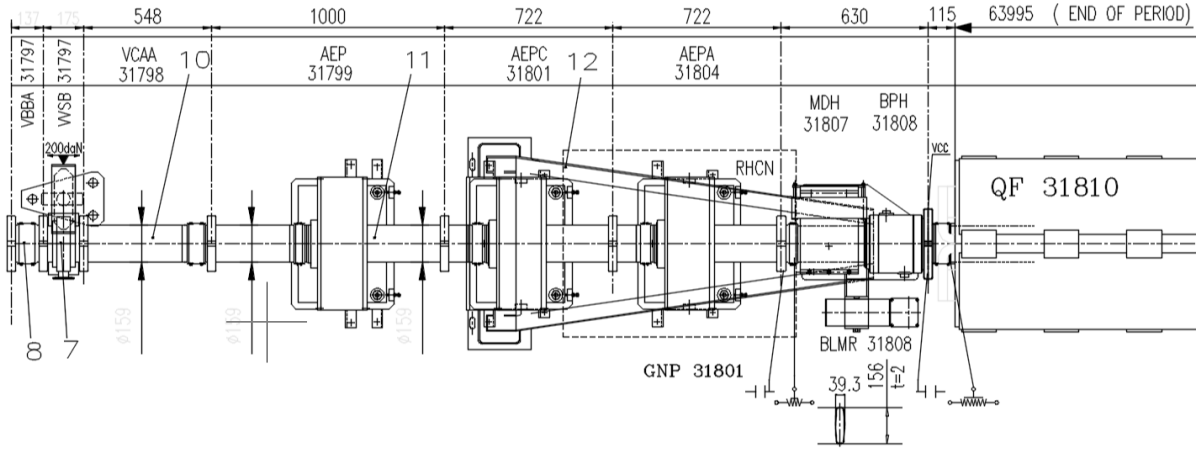

Tapered transitions

- The drift chamber upstream AEPA.33404 could be removed to make room for tapers before and after the pick-up.

- In order to comply with the 15 degree tapering angle restriction, the taper must be 254.5 mm long.

- A preliminary simulation with a shorter wakelength demonstrates the change in impedance by introducing a taper after the AEPA. The resonance peak at 1.45 GHz is greatly reduced. A double taper arrangement is currently being simulated.

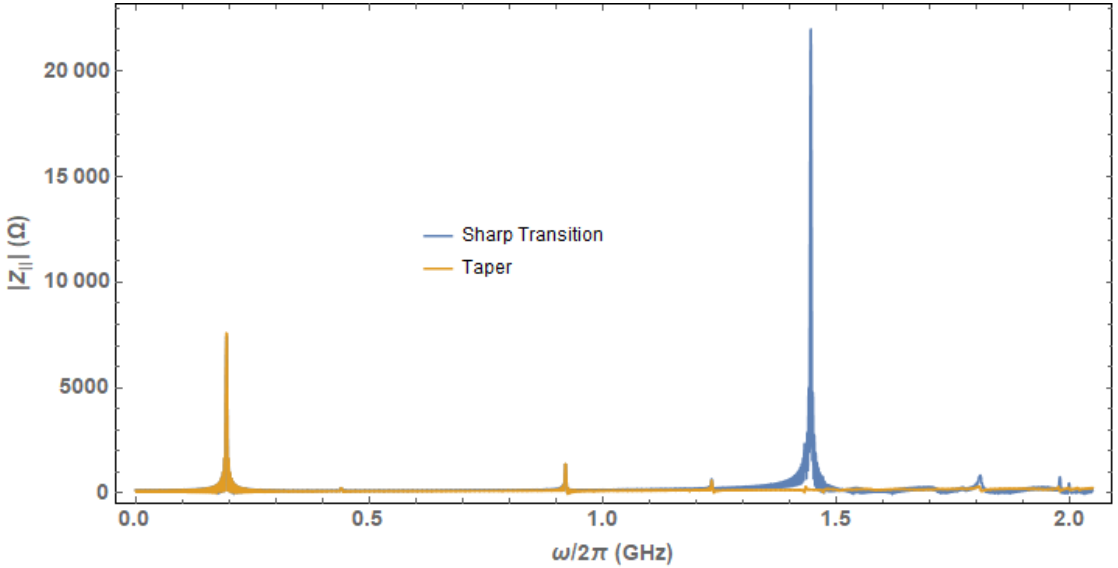

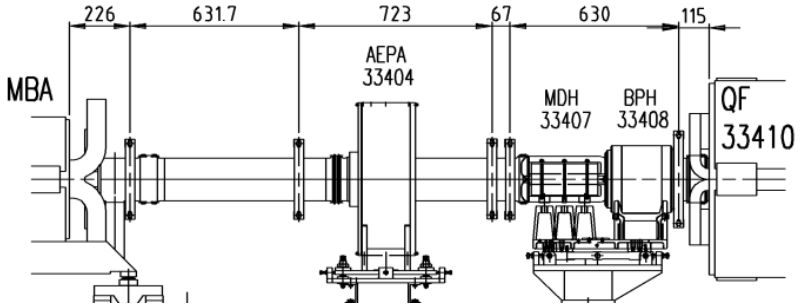

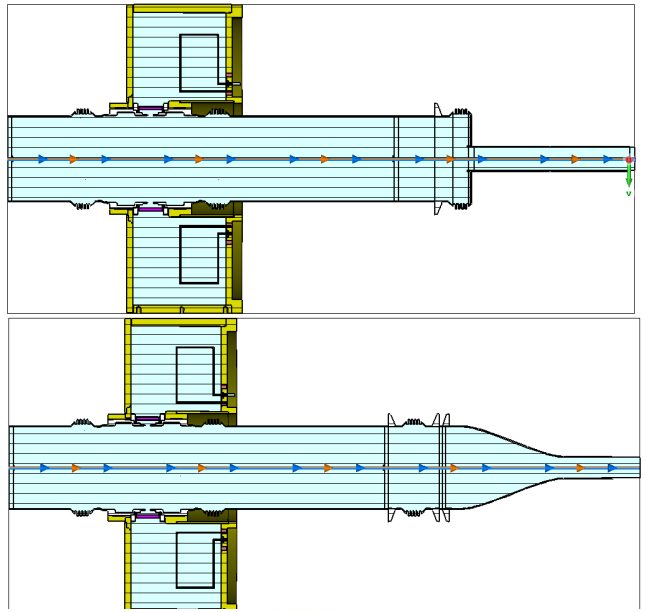

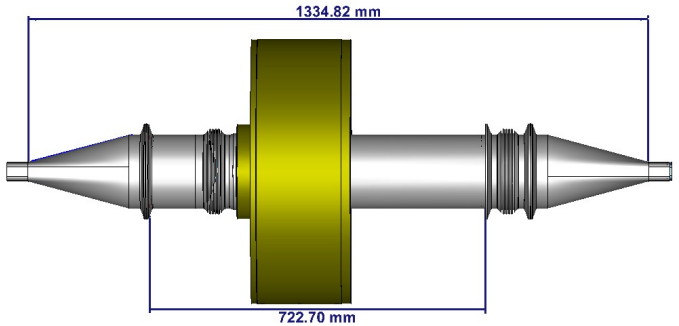

Tapered transitions

- A similar arrangement may be possible for the three pick-ups upstream QF.31810. However, in this case the only available space would be if the drift chamber and bellows VCAA.31798 are removed, freeing 548 mm of space. This would only allow for a single taper before the pick-ups, not two.

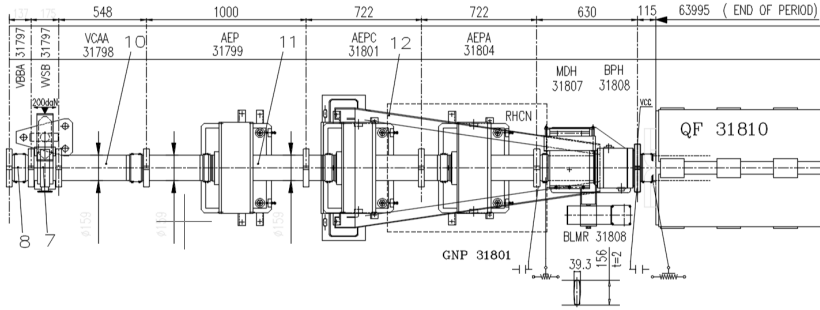

- Another option would be to use the space to separate the pickups to reduce interference of the wakefields induced in each pick-up. To investigate this, simulations of two pick-ups together were done with a drift of length 0 mm, 100 mm and 200 mm separating them.

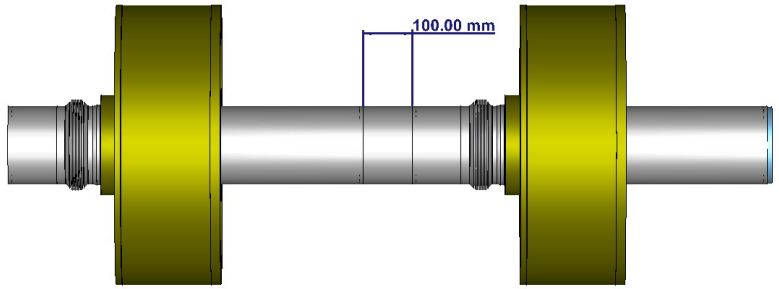

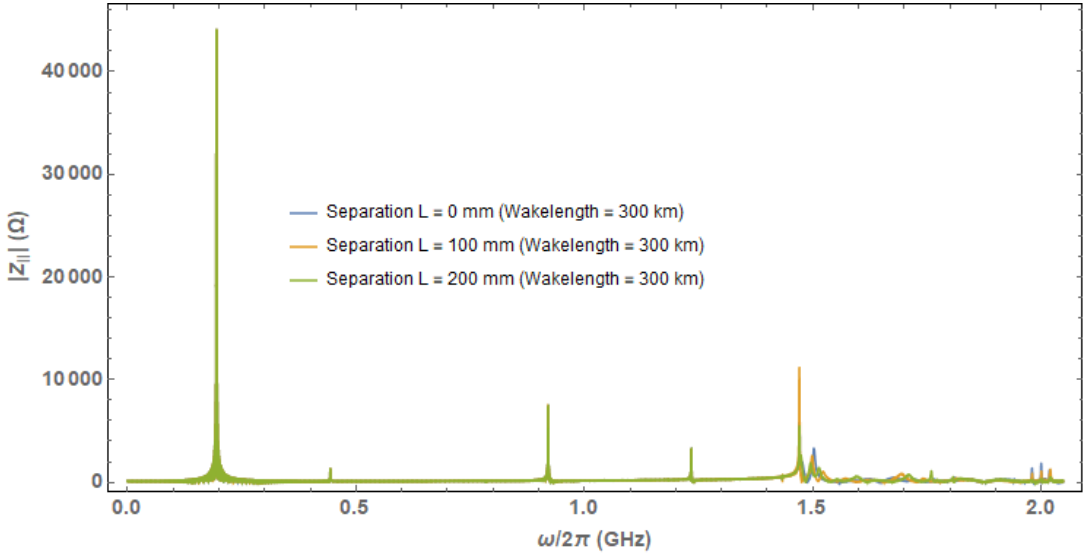

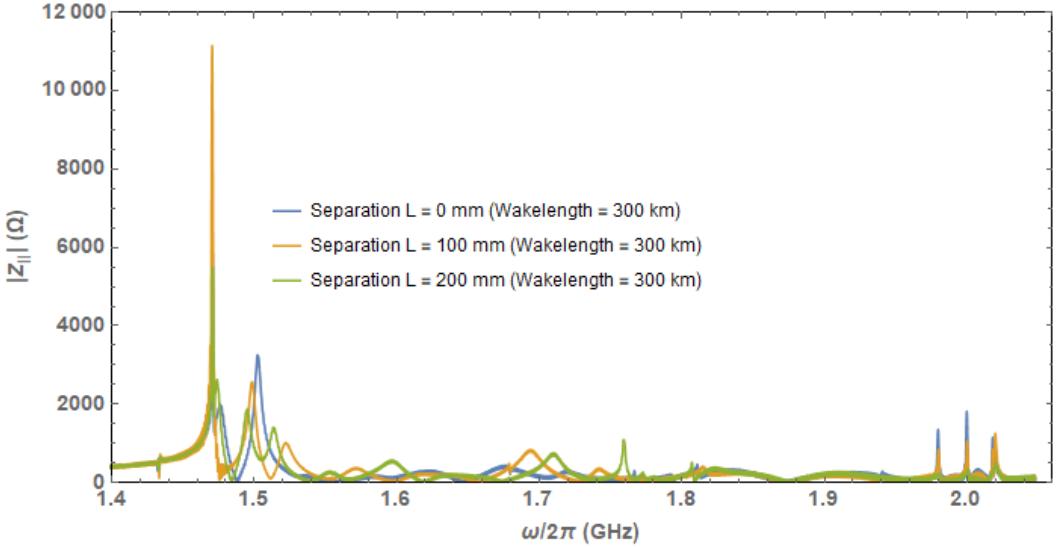

VEVY Chamber - Existing Chamber

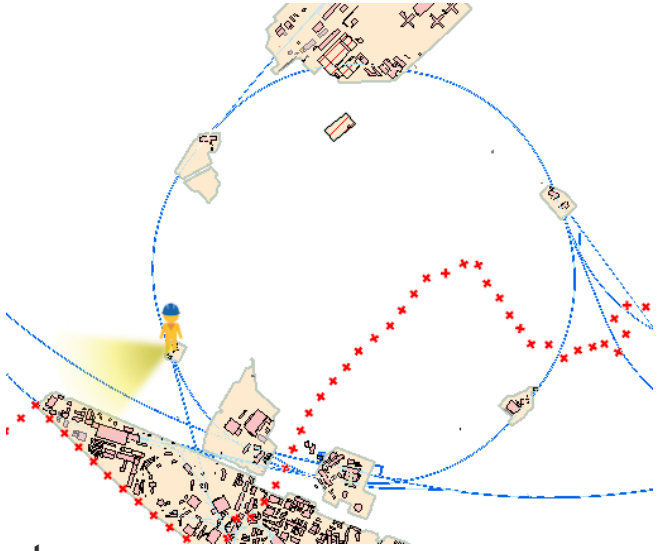

- During LS2, vacuum chambers were moved from LSS5 to LSS1, including the vacuum chamber VEVY.11740
- The VEVY chamber was originally used for a cyro pump as part of the e- cloud experiment but it is no longer required.
- It has two lateral ports (Ø156) which housed the cyro pump but these are now empty cavities which produce wakefields.

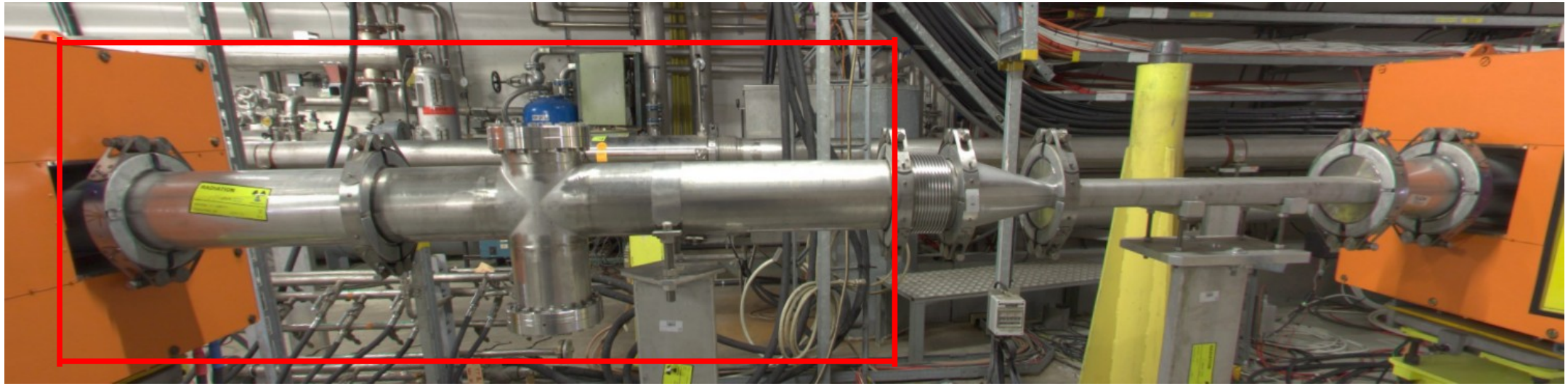

Existing Chamber

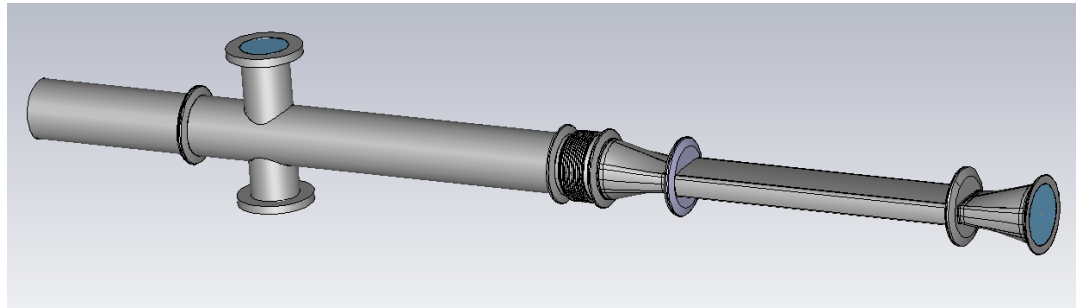

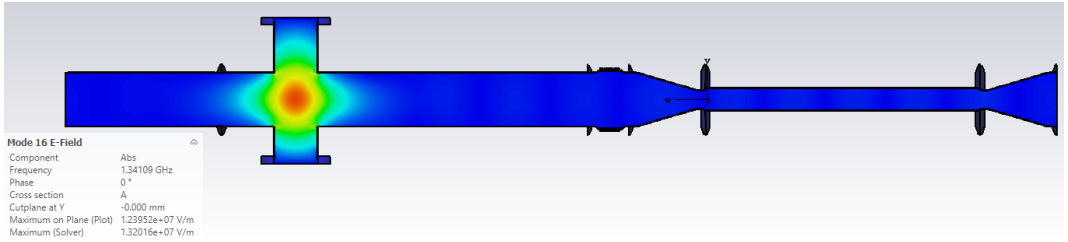

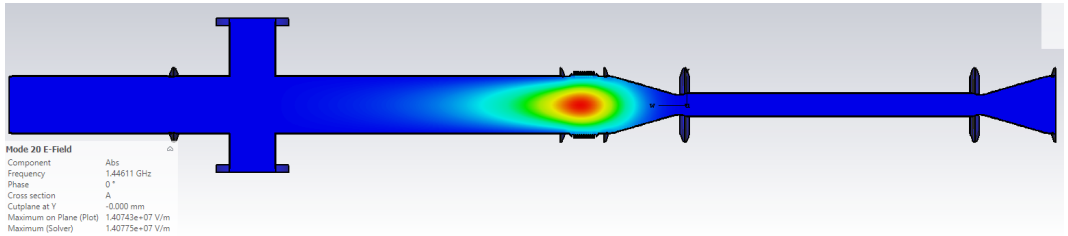

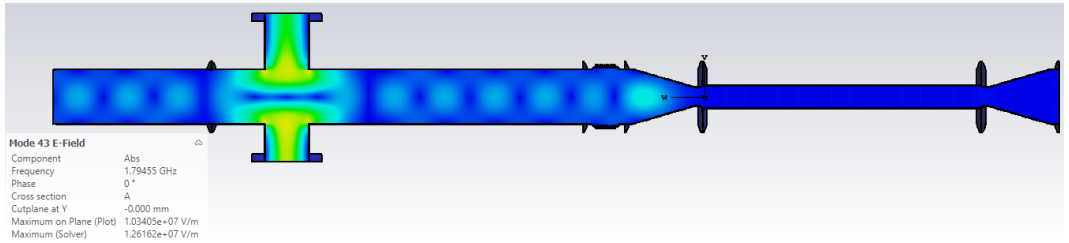

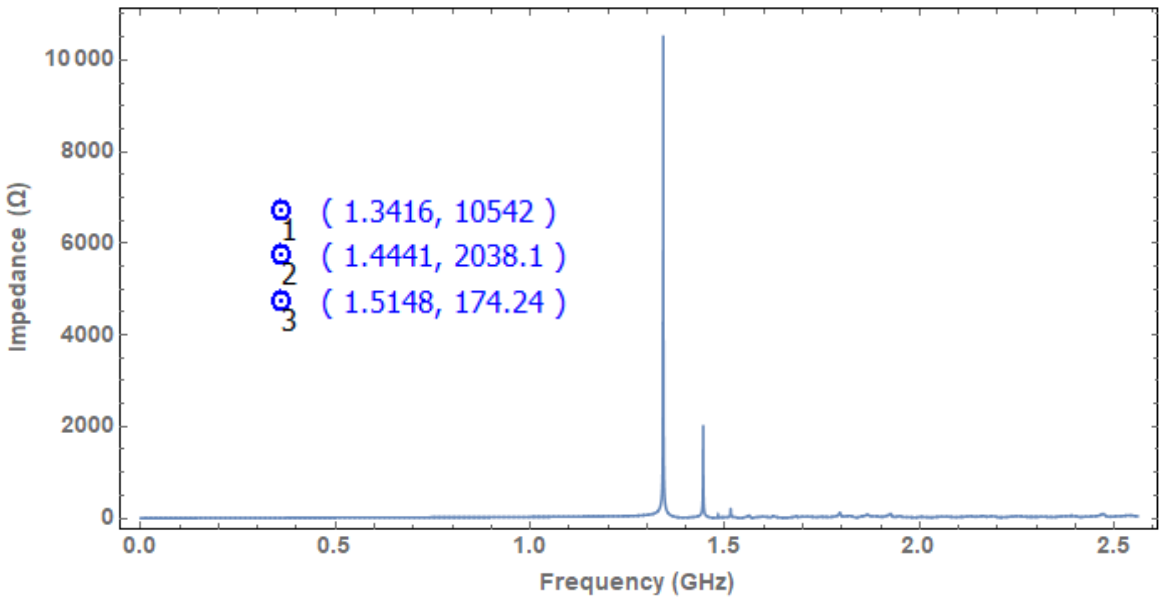

- Two out of three of the main peaks are due to the lateral ports of the VEVY chamber.
- This gives a big motivation to reduce the impedance by replacing the VEVY chamber with a lower impedance structure.

CST Models

What options do we have to replace the VEVY chamber with?

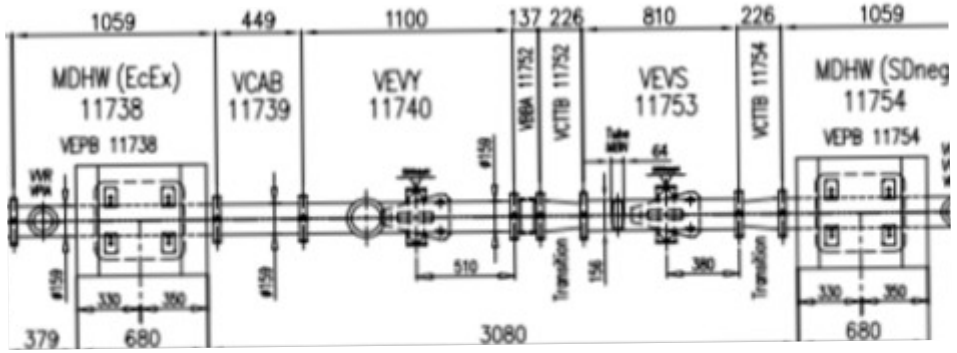

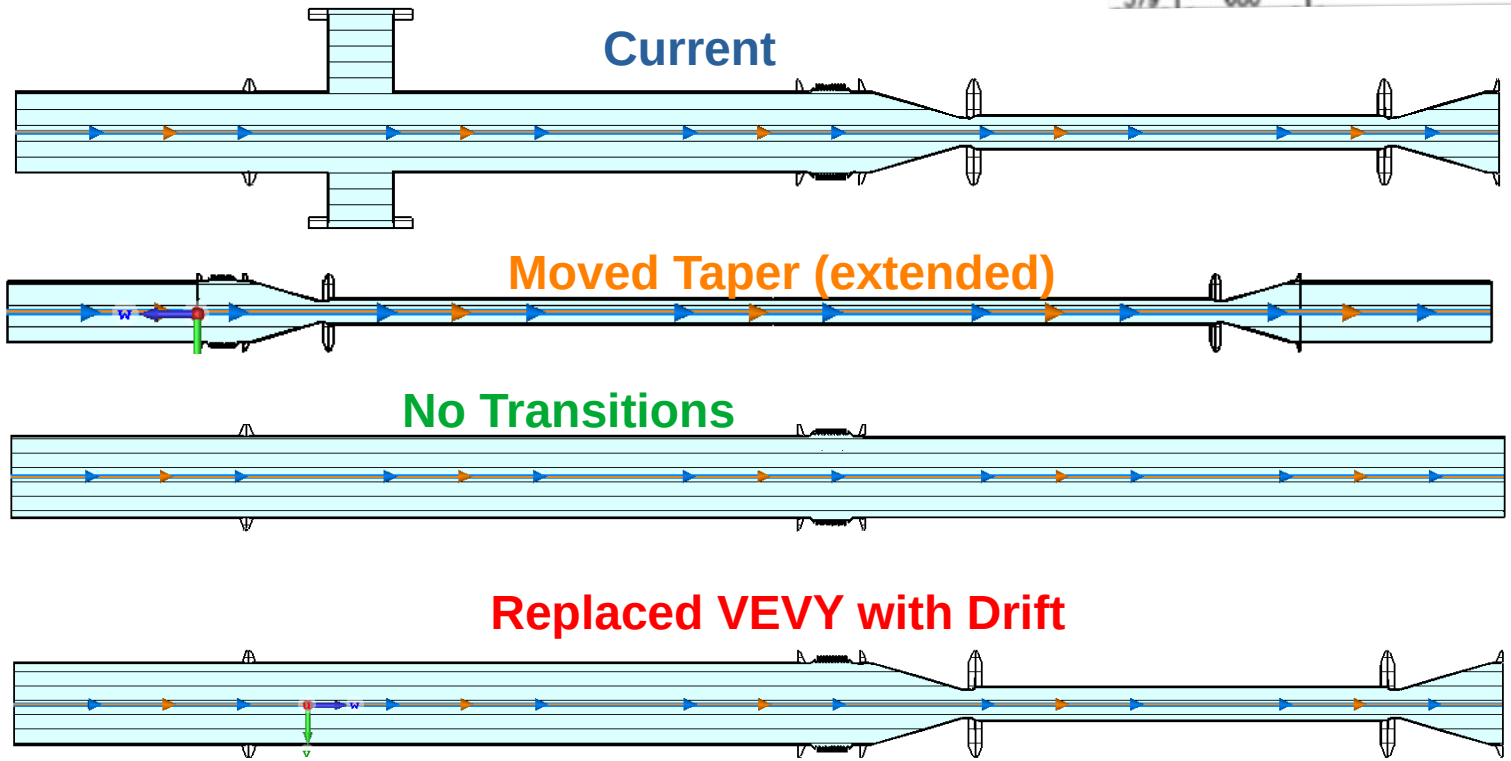

Impedance calculations

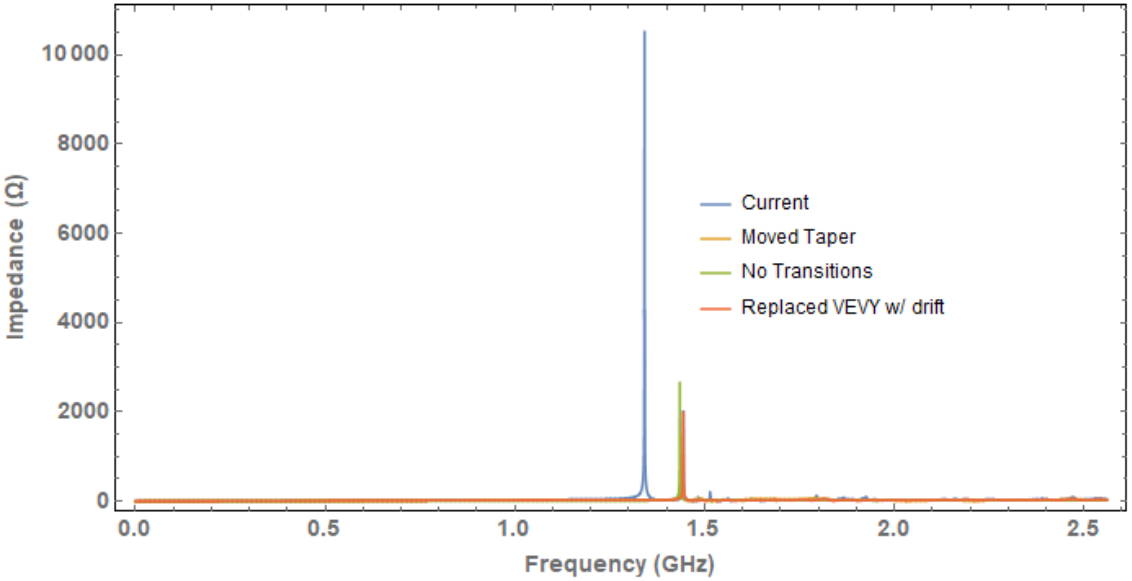

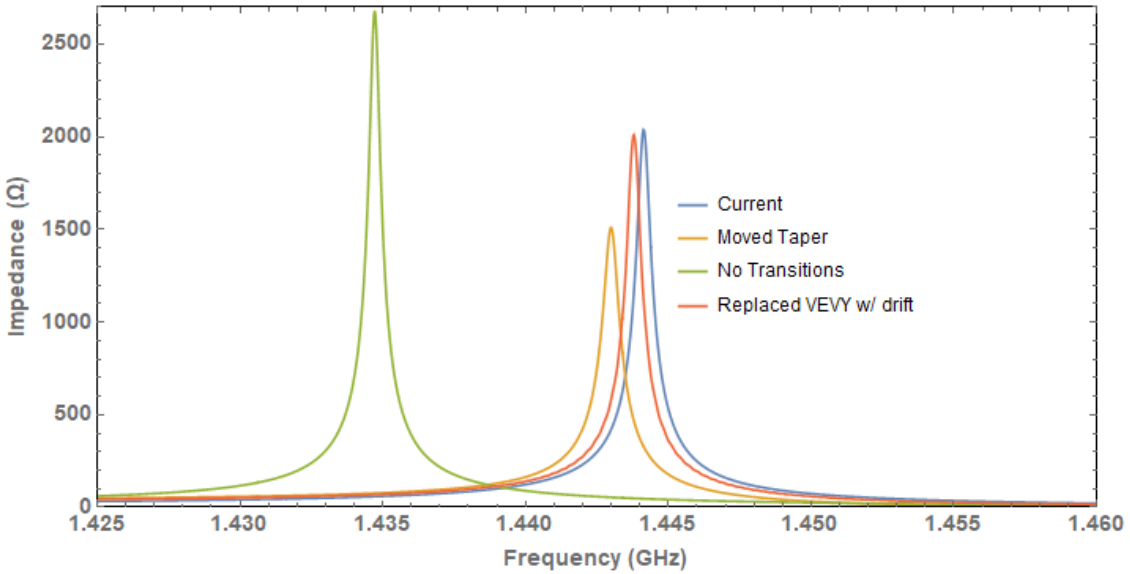

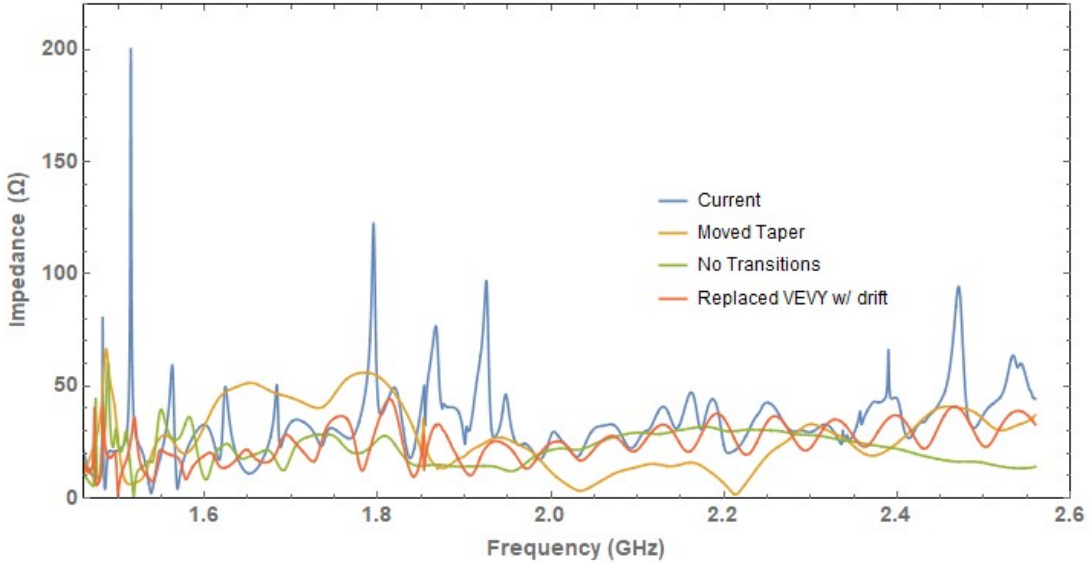

- Longitudinal impedance of the options for replacing the VEVY structure.
- The best option the VEVY structure is replaced by a 159 mm diameter drift tube when considering the cost to exchange the components against the reduction in impedance.
- The wakefields were simulated to a length long enough for the wakefields to acceptably decay.

Impedance calculations

Current

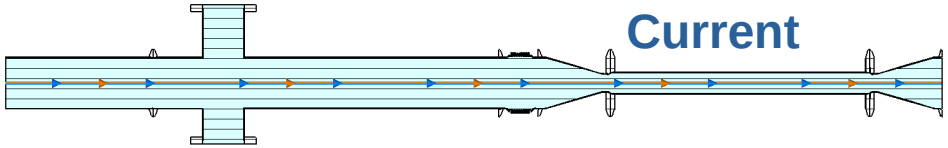

vs.

Replaced VEVY with Drift

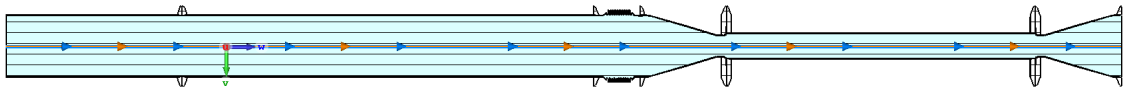

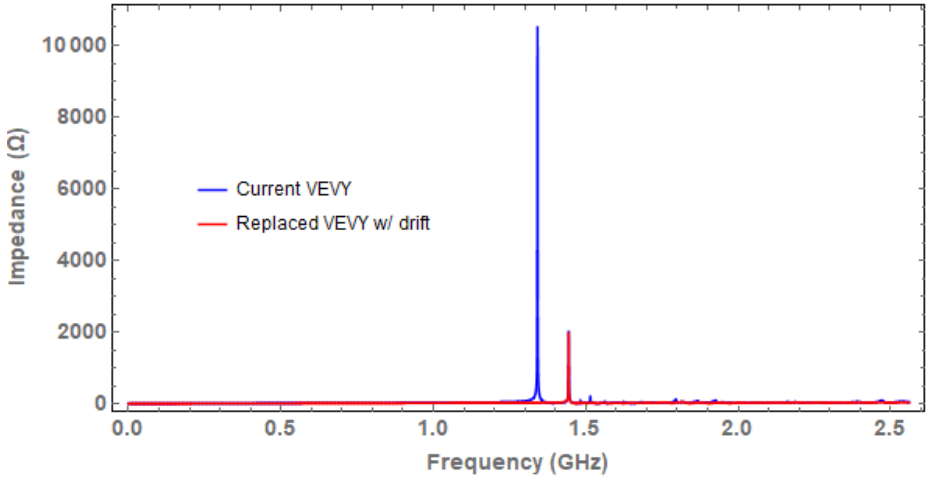

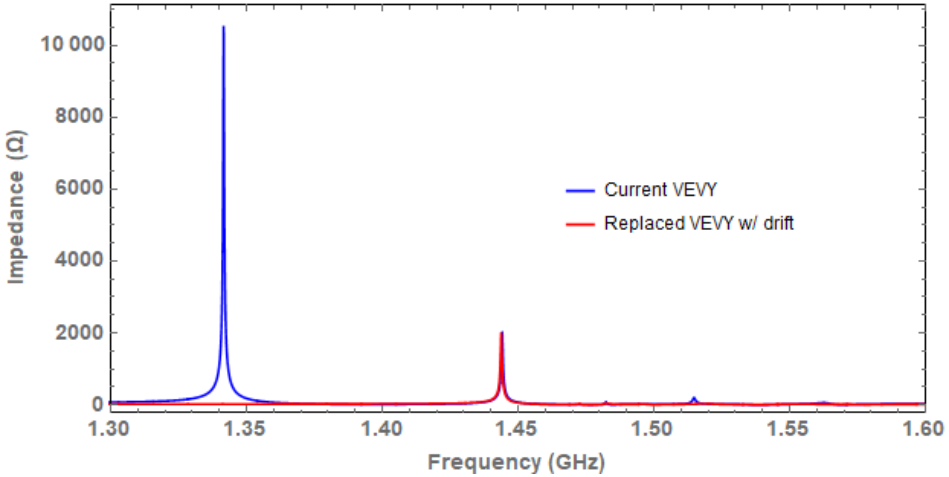

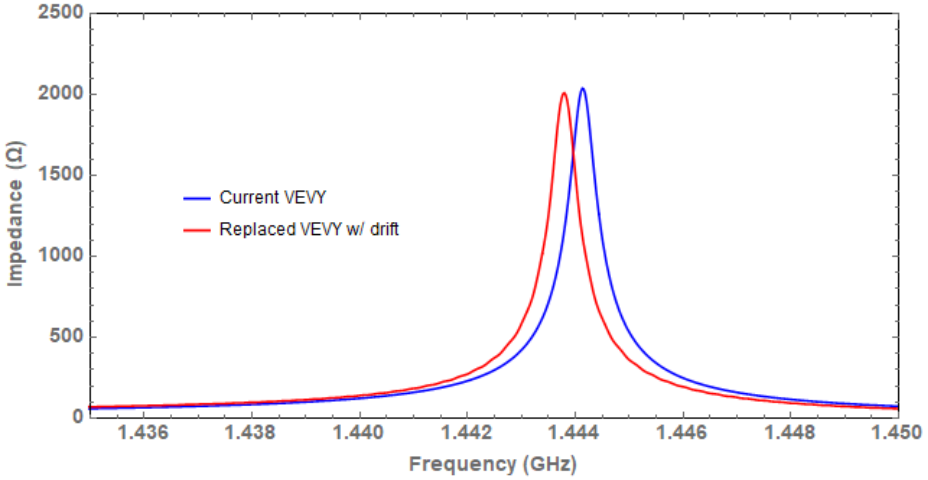

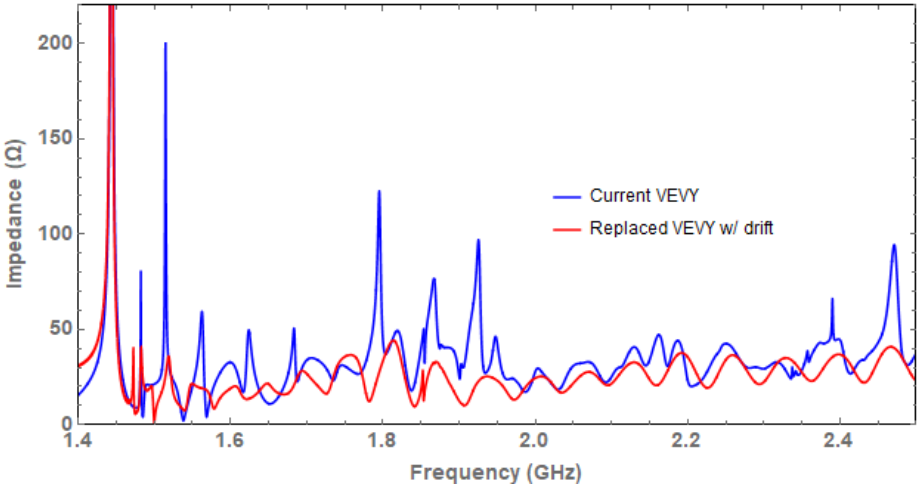

- Main contributing impedance peak of the current arrangement is gone.
- Impedance peak at ~1.444 GHz is due to the bellows ringing.
- Small frequency shift of peak could be due to volume change of the chamber but could possibly be improved by increasing the mesh further.

Eigenmode vs Wake Monitor

Replaced VEVY with Drift

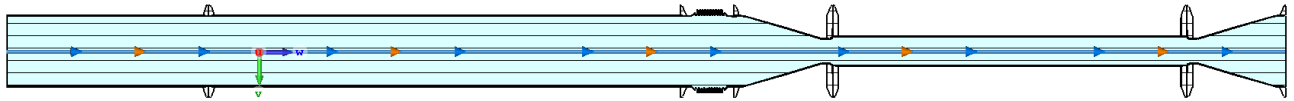

Eigenmode

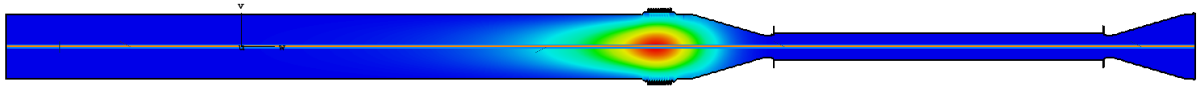

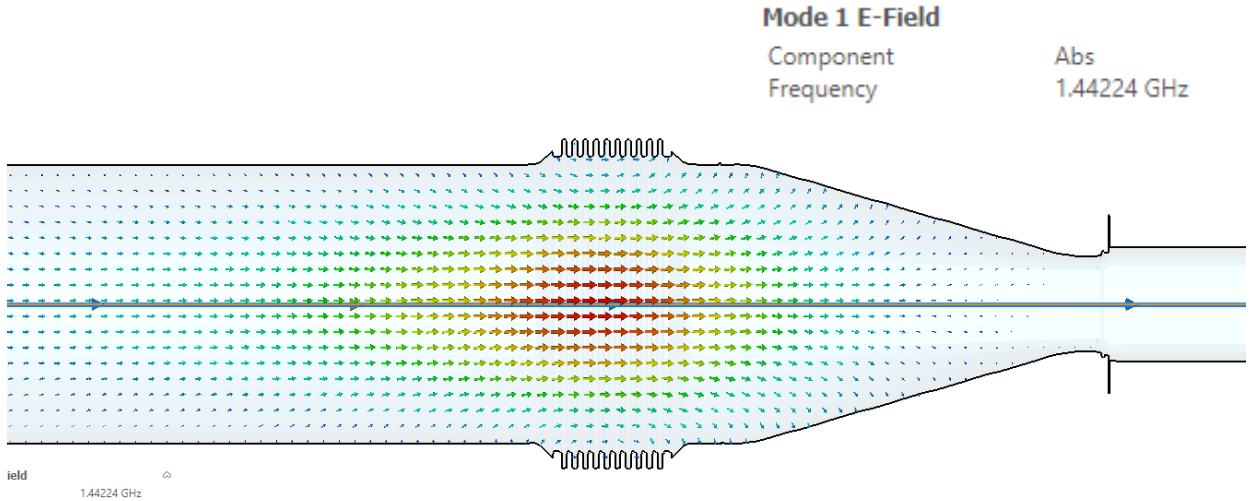

Wakefield Field Monitor

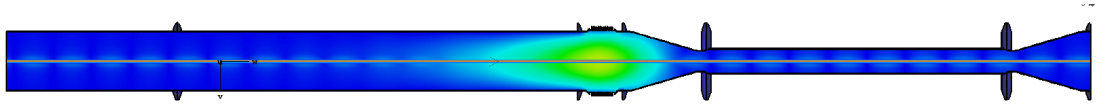

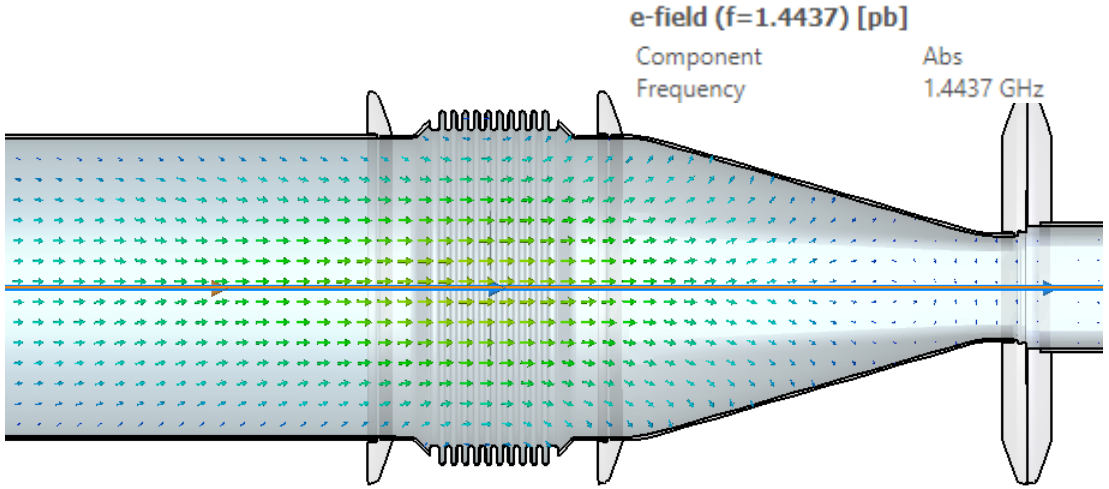

Replacing the VEVY Chamber

- During the YETS 2022-2023, the vacuum sector 135 will be opened as part of e-cloud maintenance. Taking advantage of this opening, the vacuum chamber VEVY at position 11740 could be exchanged by a type VCAB, of the same length [L=1100mm].
- The current vacuum chamber support at position 11751 will be re-used to support the new vacuum chamber type VCAB.
- The vacuum chamber VCAB has a length >500mm, therefore this will be internally coated with amorphous carbon as part of the SPS e-cloud reduction strategy.

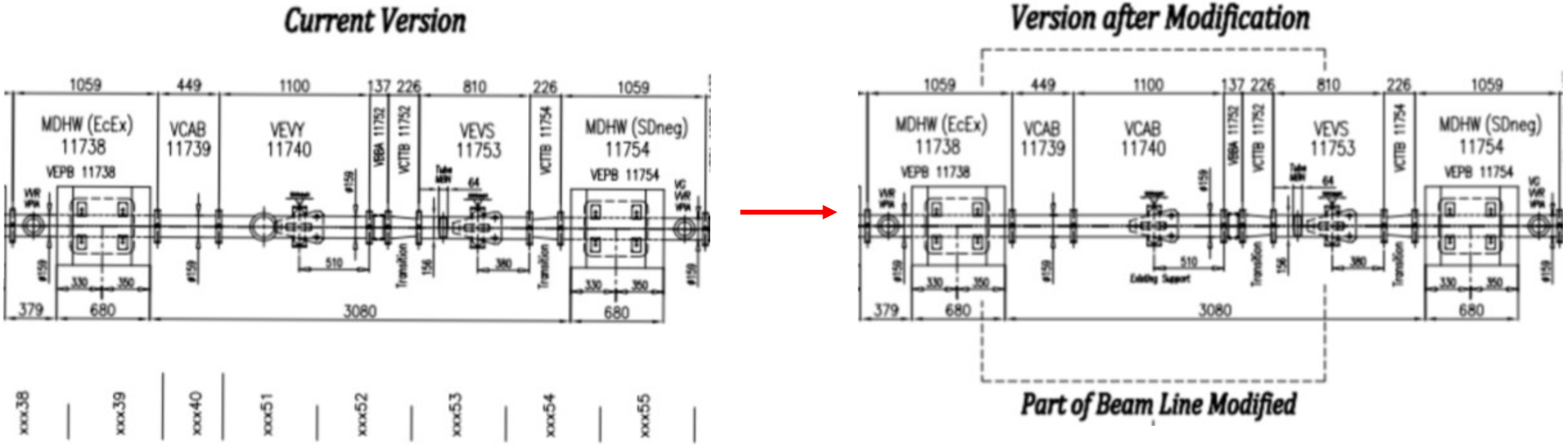

Summary

- The impedance calculations of the pick-ups and the VEVY chamber have been shown.
- We propose that tapers could be installed around the various pick-ups to reduce the impedance contribution.
- The VEVY structure was originally used for a cyro pump as part of the e- cloud experiment but it is no longer required and is introducing an unnecessary impedance.
- Multiple options to replace the VEVY structure were simulated in CST, with the case where the VEVY chamber is replaced with a 159mm diameter drift chosen to be the best option when considering impedance reduction against cost.
- We propose that during the YETS 2022-2023, the VEVY chamber is replaced to take advantage of the vacuum sector 135 being opened anyway.
- Thanks to Anthony Harrison (TE-VSC) for helpful discussions and assistance with the VEVY chamber.

home.cern