Upgrade of ATLAS Hadronic Tile Calorimeter for the High Luminosity LHC

DIS2023
28/03/2023

Ahmed Tarek
On behalf of the ATLAS Collaboration

MICHIGAN STATE UNIVERSITY

ATLAS EXPERIMENT

High Luminosity LHC conditions

- **The high-luminosity LHC (HL-LHC) aims to provide $3000 - 4000\ \mathrm{fb}^{-1}$ of integrated luminosity (factor 10 w.r.t integrated luminosity of the first LHC runs!)**
  - **LHC will increase the instantaneous luminosity a factor 5-7 times the current instantaneous luminosity**
  - With an average number of interactions per-bunch crossing of 140 to 200 ⇒ extremely challenging conditions for the detectors
  - Full detector upgrade is needed to withstand these conditions and maintain physics performance
    - Extensive HL-LHC upgrade programs are developed, usually labelled as *Phase-II upgrades*

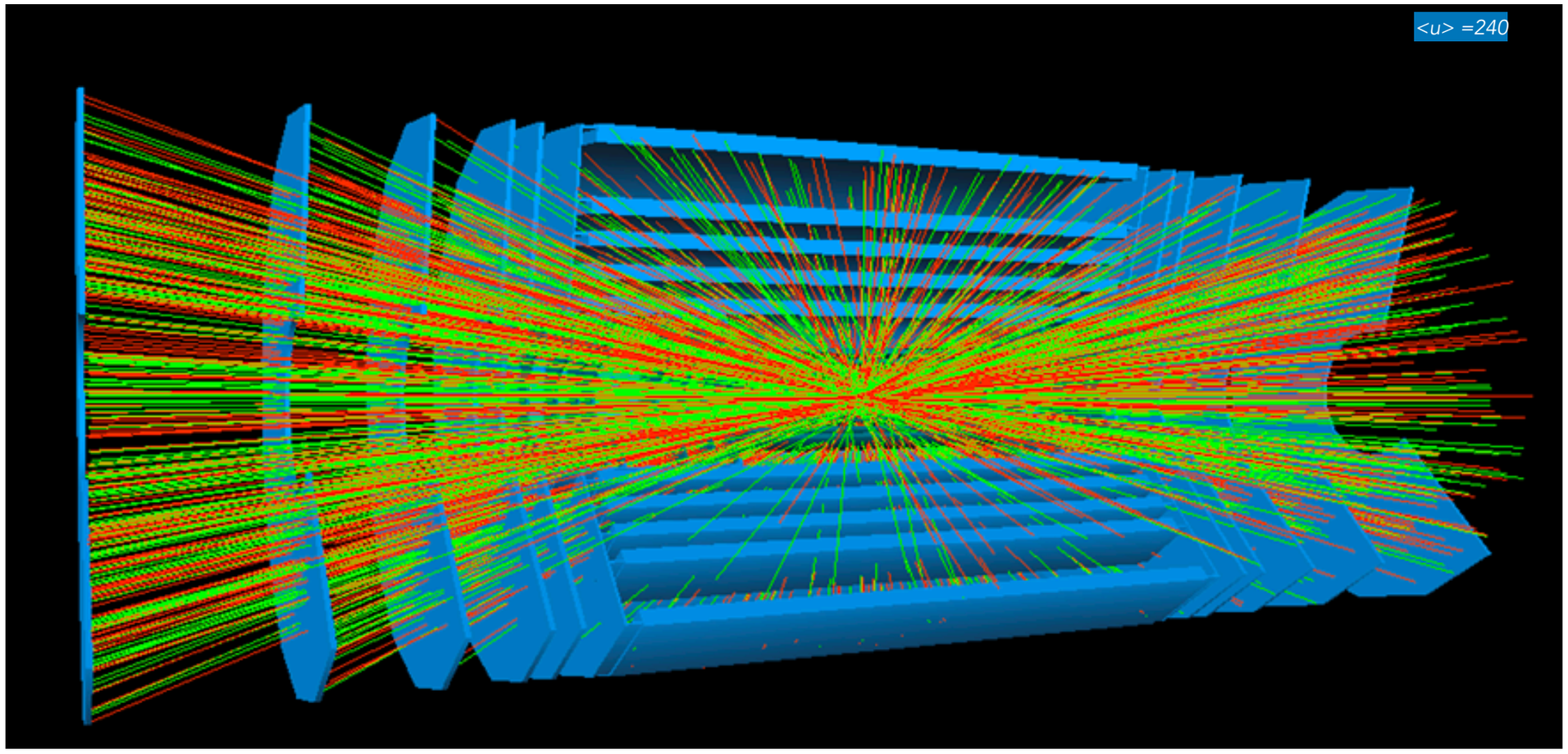

ATLAS Upgrade plans

- **ATLAS is planning an extensive upgrade program for HL-LHC (Phase-2 upgrades)**
  - L1 Trigger upgrades at 1 MHz, 5.2 TB/s, 10 μs latency
  - Electronics upgrade for the electromagnetic and hadronic calorimeters
    - Fast readout at 40 MHz and new electronics to withstand high radiation
  - New High Granularity Timing Detector to improve pile-up separation, with 30 ps timing precision
  - New RPCs, sMDTs and TGCs Muon chambers to improve momentum resolution and trigger efficiency
  - New All silicon Inner detector with finer segmentation and reduced material budget

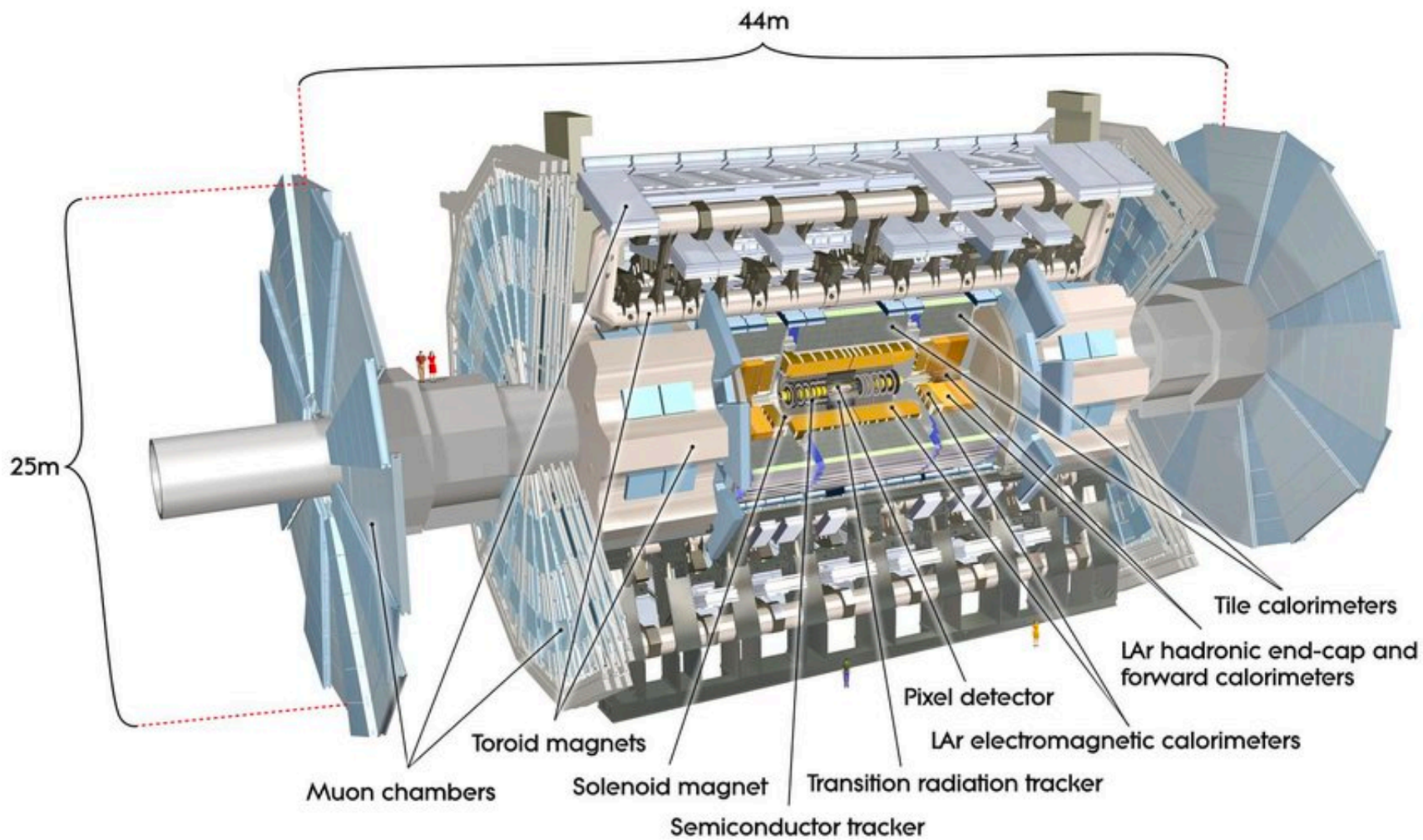

ATLAS hadronic calorimeter: *TileCal*

- **TileCal is the Hadronic calorimeter covering the most central region of ATLAS**
  - Using plastic scintillating *tiles* as active material and iron plates as absorber
  - Light produced in the tiles is transmitted via wavelength shifting fibres to photomultiplier tubes (PMTs).
  - Electronic signals from ~10k PMTs are measured and digitised every 25 ns and signals transfer to data-acquisition systems.
- Divided into long barrel ***LB*** ($|\eta| < 1.0$) and 2 extended barrels ***EB*** ($0.8 < |\eta| < 1.7$), composed of 64 modules in ϕ

- Calorimeter cells range from 10 MeV to 2 TeV dynamic range with hadrons energy resolution:

$$\frac{\sigma}{E} = \frac{50\,\%}{\sqrt{E}\ \text{[GeV]}} \oplus 3\%$$

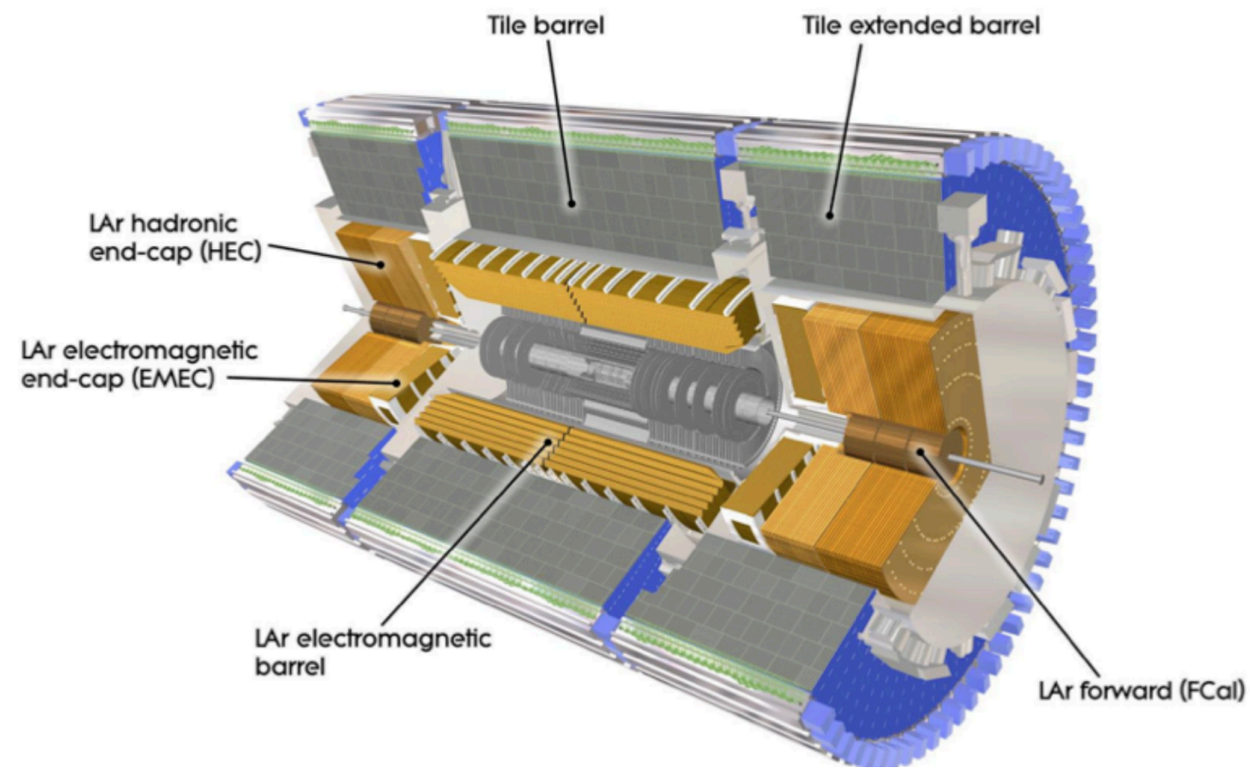

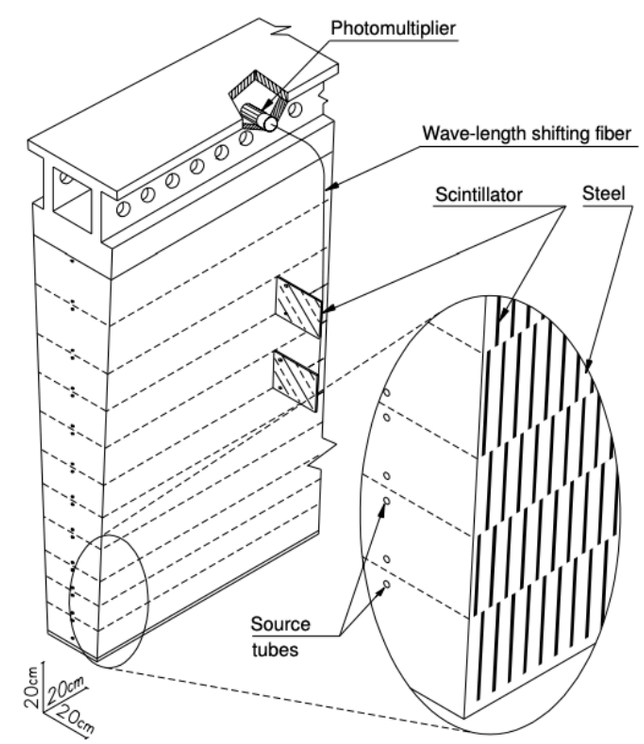

A *quick* overview of the *TileCal* systems

On-detector

- Mechanical: **Super drawers** (SD) divided to **4 mini-drawers** (MD)
- **Each MD hosts 12 PMTS** each with its Front-End Boards (FEBS)
- A **MainBoard (MB)** digitises the output from the 12 FEBS then a **DaughterBoard (DB)** transfers data to the backend
- The **LVPS** systems (monitored with ELMB2) provide power for frontend electronics

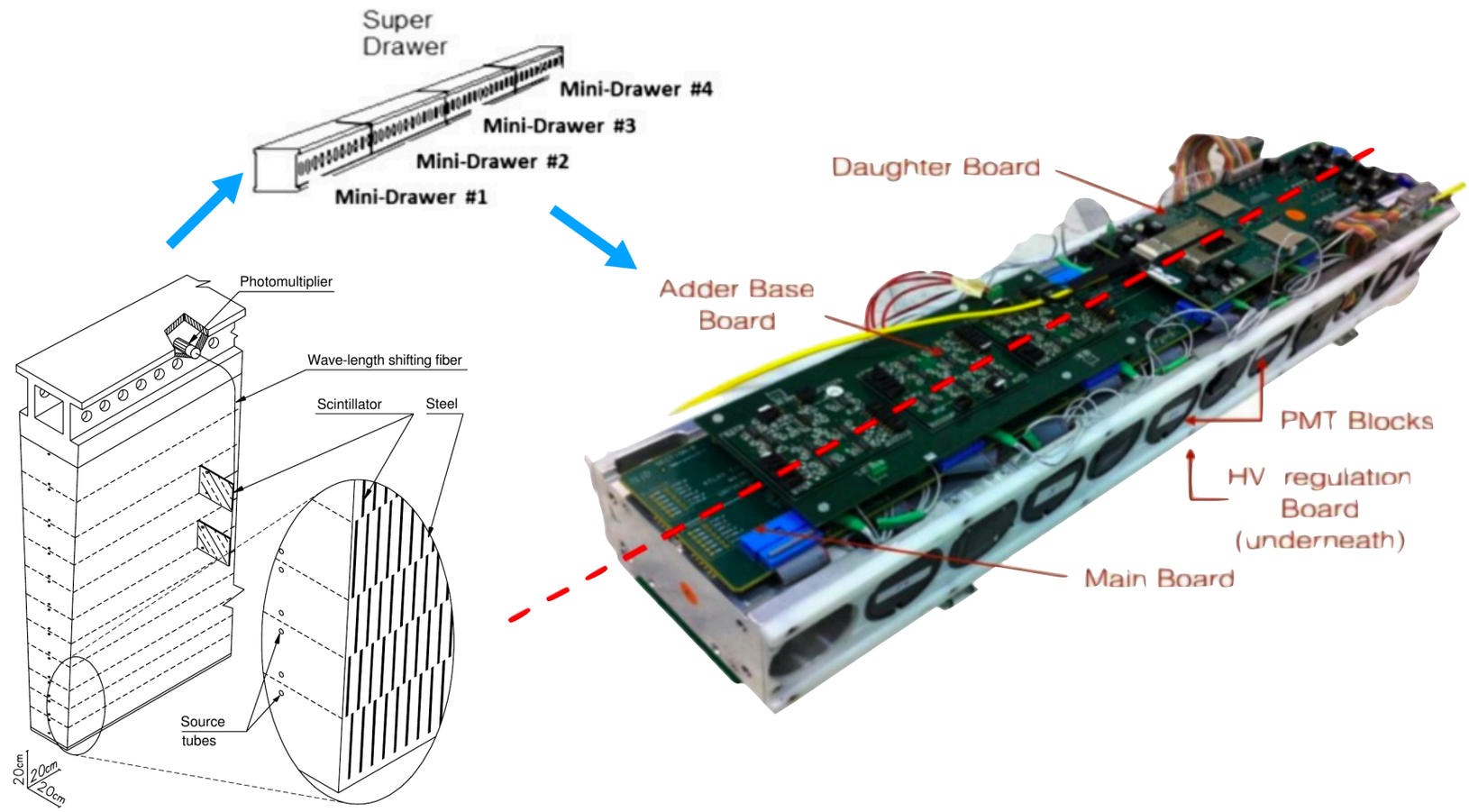

Off-detector

- **TilePPr (Preprocessor)** buffers data from MDs, evaluates signal and provides reconstructed energy per cell for TDAQi
- **TDAQi** calculates trigger objects and communicates with TDAQ via the FELIX

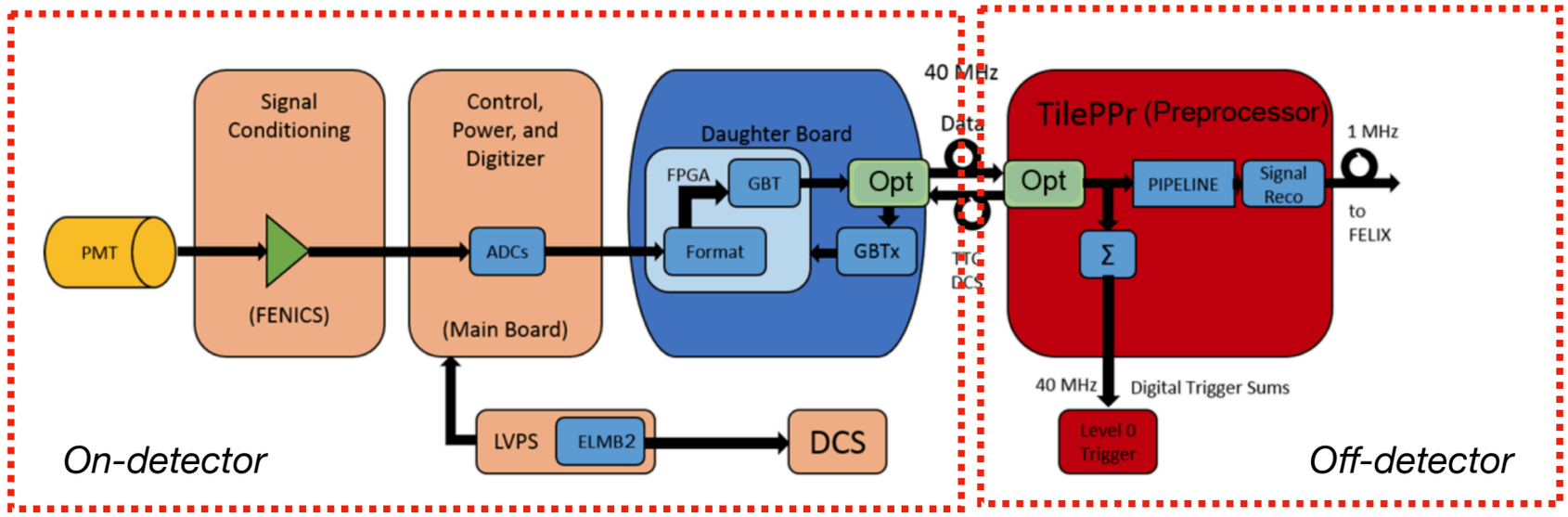

TileCal Phase-II upgrades

TileCal planned upgrades for the HL-LHC

- **Full replacement and redesign of on- and off-detector readout electronics to accommodate HL-LHC data-flow (new TDAQ architecture) and radiation conditions**
  - Providing low-latency, continuous readout at 40 MHz
  - Fully digital input for the ATLAS trigger system
  - New low- and high-voltage power supply systems withstanding the high radiation requirements
- **New modular mechanical design with (4 mini drawers) for better accessibility and maintenance**
- **Replacement of ~10% of the PMTs (degraded from previous runs)**

Strategy: Add layers of redundancies to avoid one-point failures, increase radiation tolerance and robustness of the TileCal system

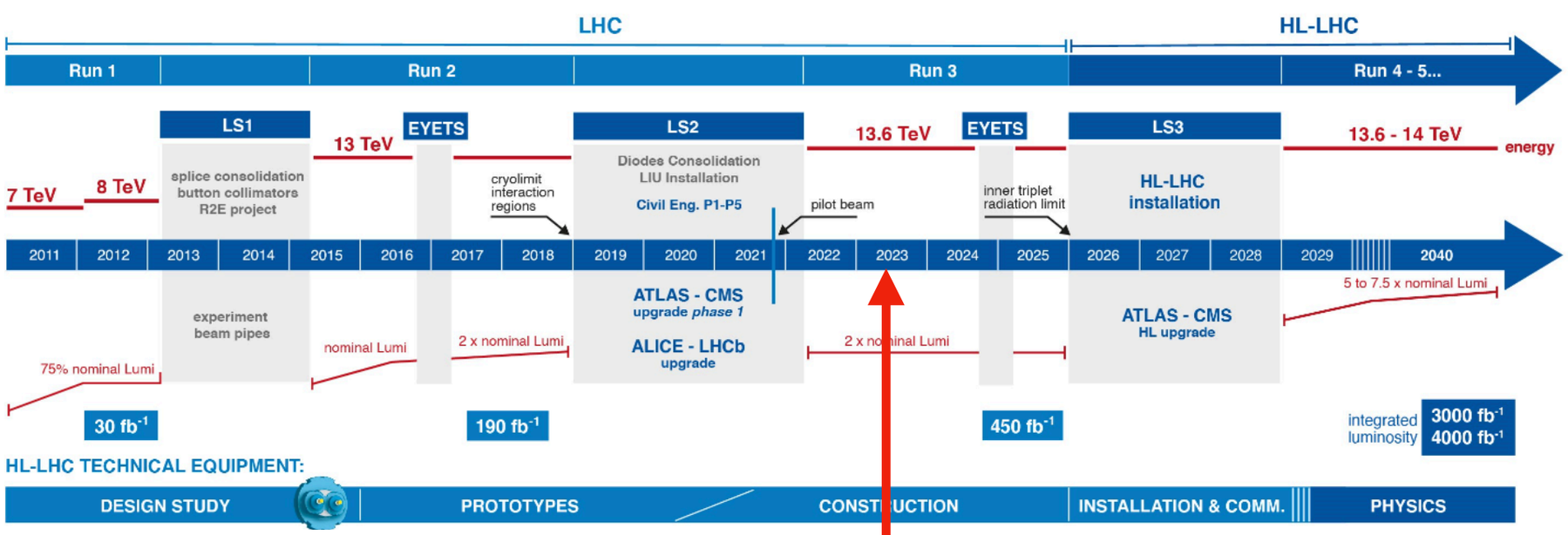

Mechanical upgrades

SuperDrawer (SD)

- **SuperDrawer (SD)** for Phase-II are composed of
  - 4 MiniDrawers (MD) for the long barrels (a total of 128 SDs + spares)
  - 3 MD and 2 MicroDrawers for the extended barrels (a total of 128 SDs + spares)
  - Each with 2 independent sections for redundancy
  - Mechanical design to facilitate accessibility
- **<u>Production of 264 SDs is completed and shipment to CERN ongoing</u>**


LB SDs

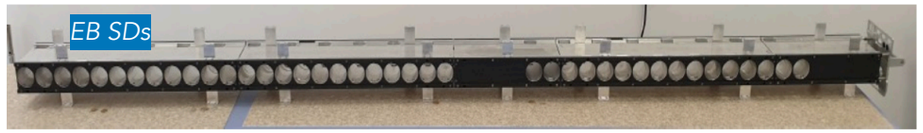
EB SDs


BB production

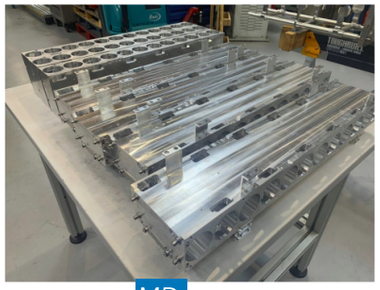
MDs

MD Services

- Associated and dedicated tools for installation, extraction and services (LV/HV cables, Fibre optics fan out and cooling distribution)
  - **<u>Production is completed</u>**


LV cables packed and tested


Cooling cables


Optical fibre fan-out

Front-End electronics

PMTs

- **Replacement of ~10% PMTs (9852 PMTs) due to ageing effects with new Hamamatsu R11187 model**
- Dedicated test benches developed and ready to test new PMTS

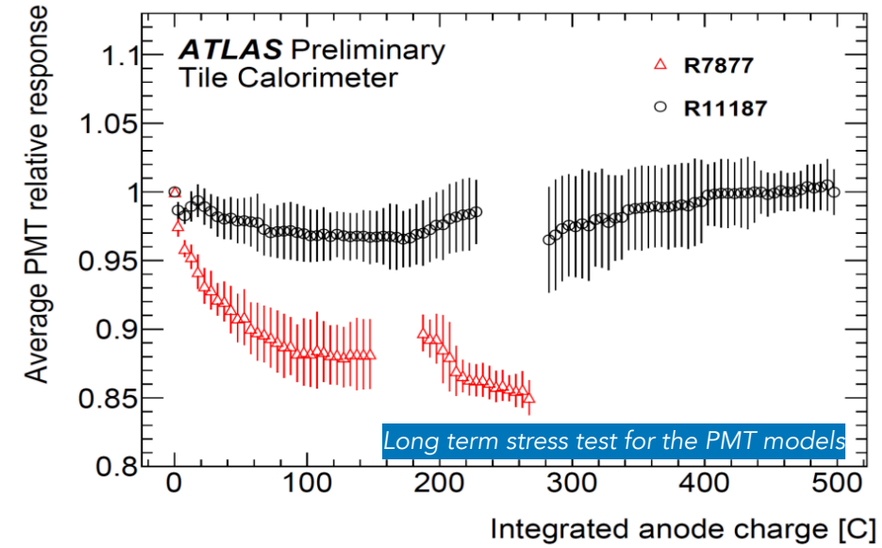

HVADs

- **High Voltage Active Dividers (HVADs) will replace passive HV dividers for better response stability**
- Tests for irradiated HVAD in dynamic operating conditions on-going
  - **<u>Production completed (10828 HVADs)</u>**

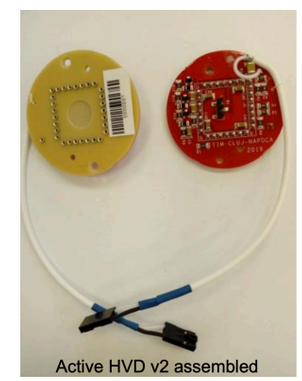

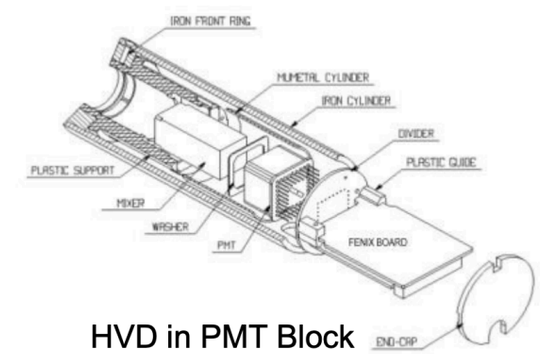

HVD in PMT Block

FENICS

***F**ront **E**nd board for the **N**ew **I**nfrastructure with **C**alibration and **S**ignal Shaping*

- Shaping and amplification (2 gains) of the PMT signal and calibration (9852 boards in total)
- Built in charge injection systems for ADC calibration
- Planning to produce 11k boards
- Fully operational Burn-in Test Repair (BTR) stations
- Assembly started in Q1 2023

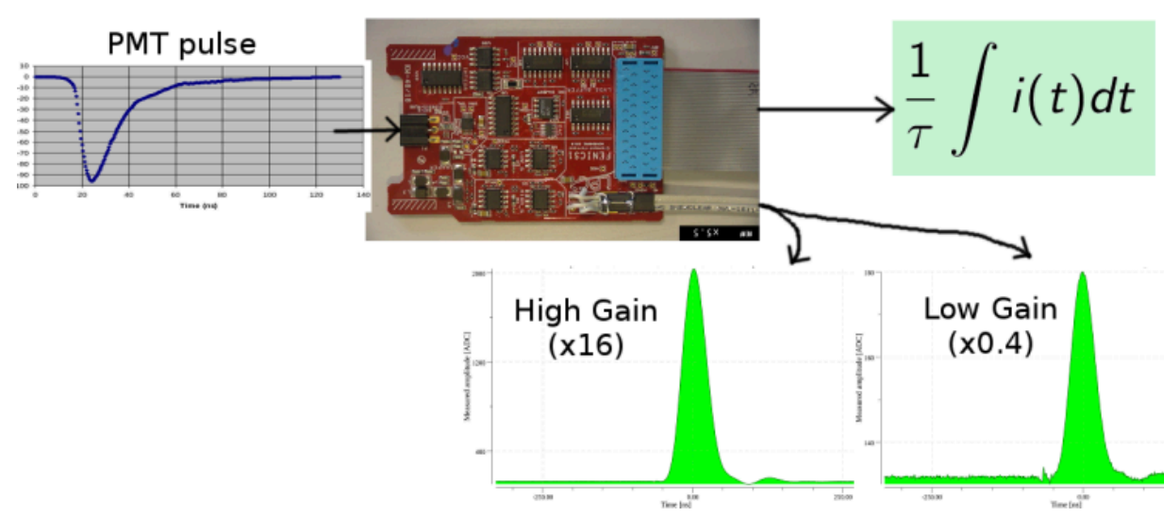

MainBoard and DaughterBoard

MainBoard

- **Digitisation of analog signals from FENICS and provides control for the FENICS cards**
  - In addition to high speed path to the daughter board
- Distributes 10 V power independently on each side for redundancy and reliability
- 12-bit dual ADCs at 40 MS/s for the 2 gain signals
- 16-bit ADCs at 50 kS/s for integrated readout
- Undergoing TID radiation tests
- **Produced approximately 50% of 896 required**

1 MainBoard 896 in total

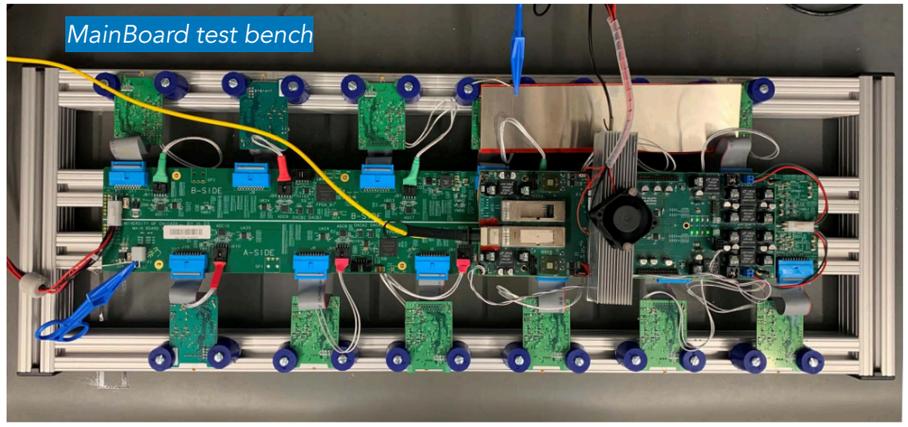

DaughterBoard

- **High speed interface with off detector electronics**
- **Sends detector data to TilePPr electronics via high speed links (GBT)**
- 896 boards in total, used for clock and command distribution to FENICS
  - 2 GBTx chips for clock recovery and distribution
  - 2 Kintex Ultrascale FPGAS for communication and data processing (SEL tolerance)
  - 2 QSFP high speed optical modules
- Final design expected this year
- NIEL tests performed (post-irradiation tests ongoing) with negligible effects in most components

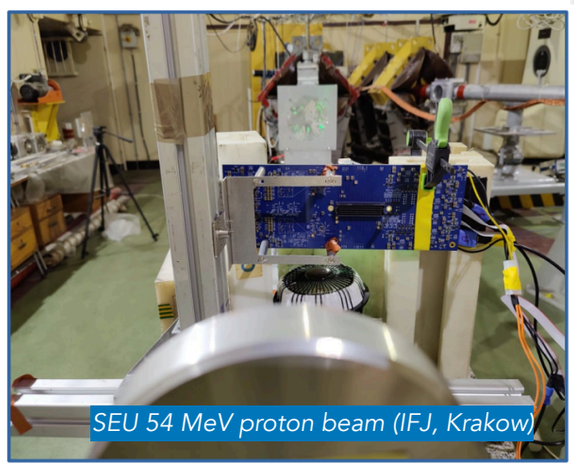

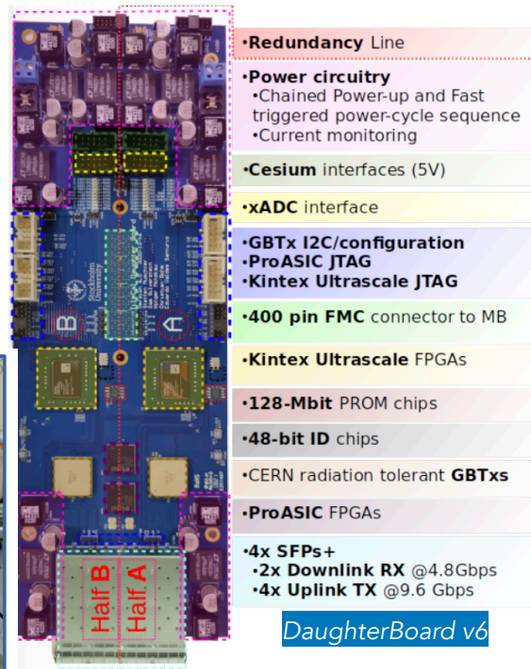

Low voltage power supply system

LVPS: provides power to on-detector electronics

- **On-detector: LVPS box (Bricks and electronics)**
- **Off-detector (service cavern USA15): Aux boards, 200 VDC power supplies.**

- **LVPS box** houses the 10 V power supplies (Bricks) and all associated electronics and cooling, *1 box per SD*
  - Preparation for final design review ongoing

- **LVPS bricks**: 8 individual power supplies (200 VDC → 10 VDC), 8 *per each SD*
  - **Proceeding towards pre-production with all components ordered (pending PCBs).**
  - Test-station ready at CERN and Burn-in stations produced
  - Ongoing radiation tests for bricks isolation amplifiers
  - 104 Bricks planned to be produced and tested.

- **ELMB2-MotherBoard: mounting of ELMB2** (Embedded Local Monitor Board 2), *1 per LVPS box*
  - **breakout for bricks tri-state control with very robust new design**
  - **<u>Production and test complete now in BTR, 156 boards tested</u>**

- **Vertical slice tests performed successfully at CERN**

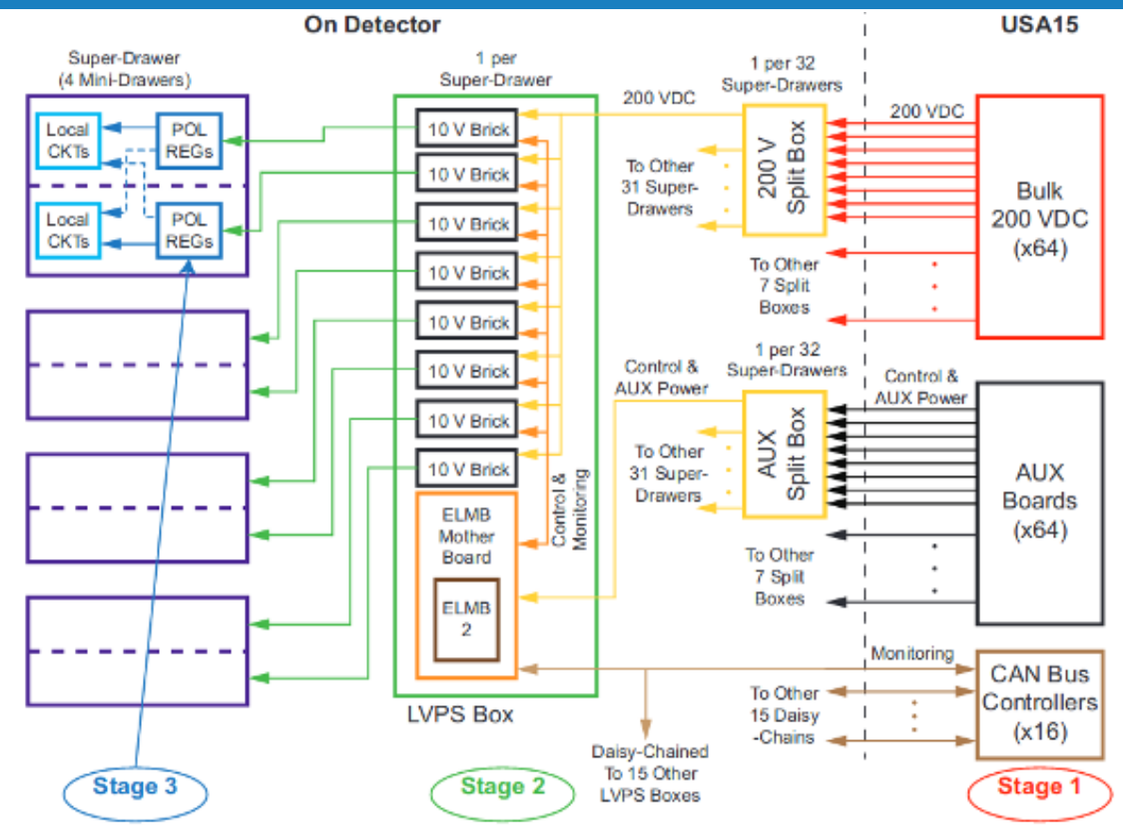

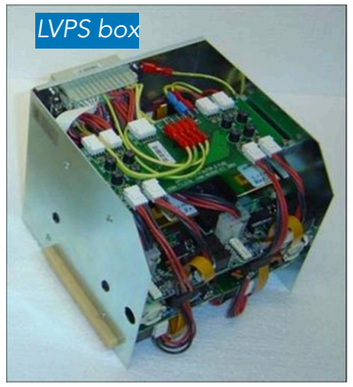

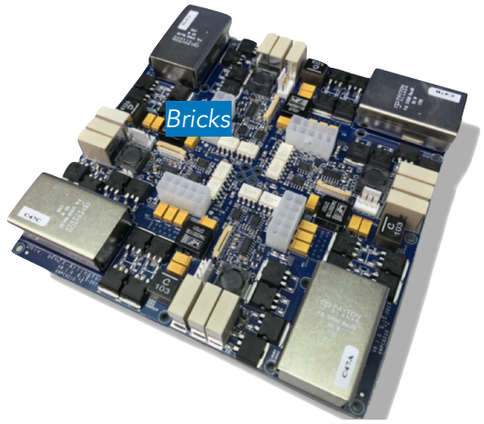

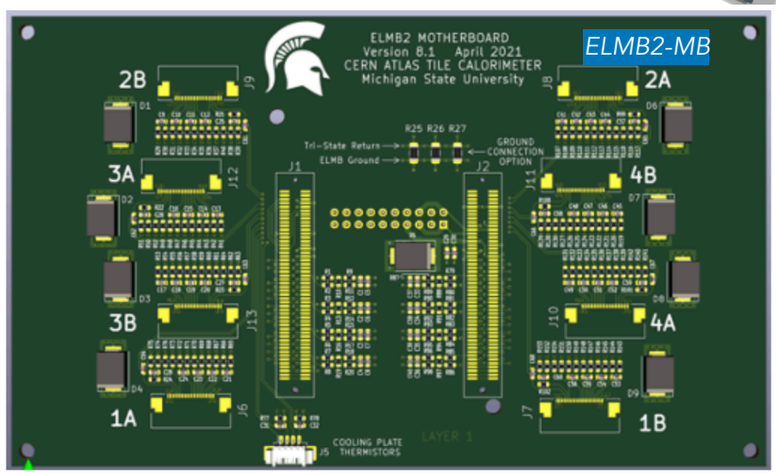

High-voltage system

- **HV power supplies in crates in USA15 service cavern at 100 m from the detector**
- **High voltage power for each individual PMT**
- **Distance protects it from radiation related problems**
- **HVremote**: 256 boards to regulate and control system off-detector at USA15, providing stable HV for the the PMTs
  - Average applied voltage ~750 V for the PMTs, stability <0.5 V rms, current $400\ \mu A$
  - Board extensively tested (all tests passed)
  - Prototypes produced and tested

- **Finalised design for HV Bus (1024 boards)**

- **Vertical slice tests performed at lab and testbeam and showing good results so far**
- Final prototype tests are planned for summer test beam 2023.

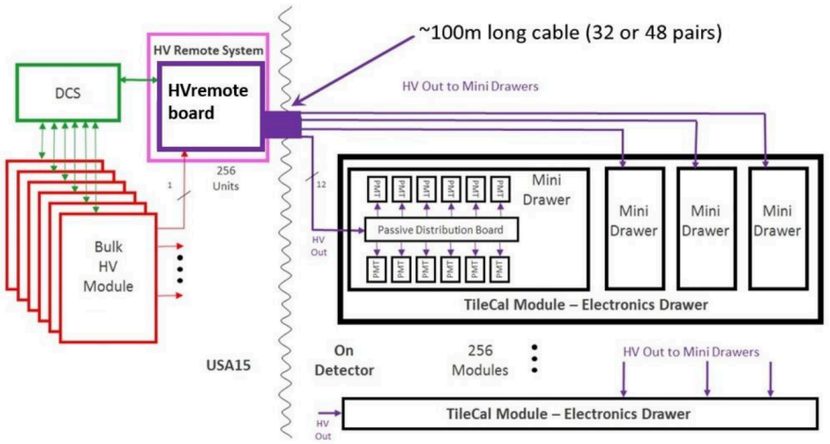

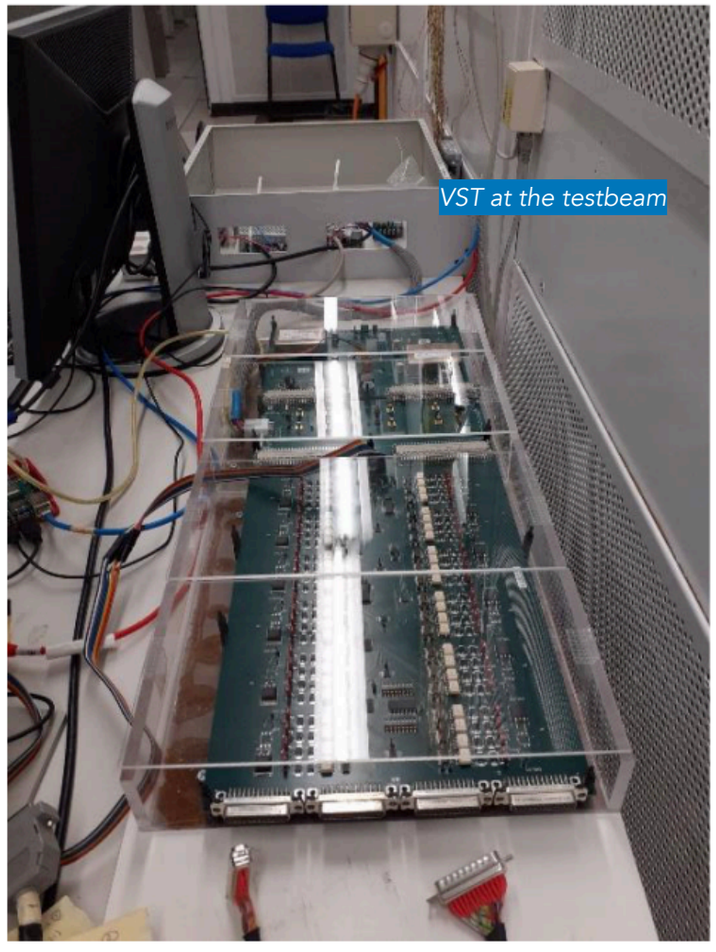

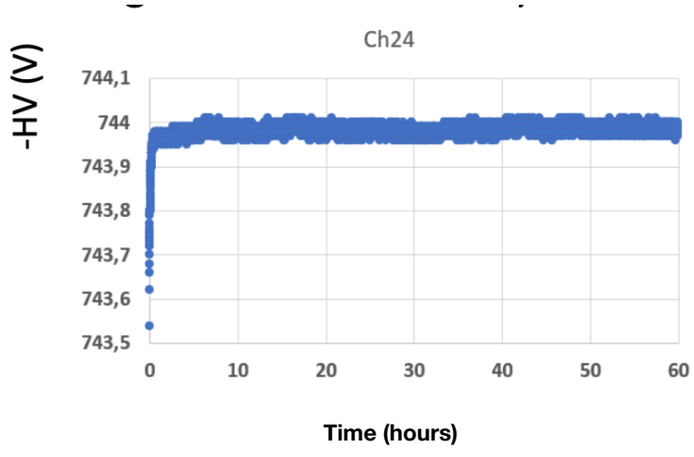

HV system - VST results

Off-detector Electronics

TileCal off-detector electronics are formed by Tile PreProcessor (PPr) and TDAQi systems

stores digitised data in large pipelines, and transmits to FELIX system upon trigger acceptance signal

- Each PPr consistent of: 1 Carrier + 4 Compact Processing Modules (CPM) + TileCoM ⇒ 32 PPr in total
  - Performs real-time data processing and reconstruction from on-detector electronics
  - Provides clock and configuration to TileCal modules
- 32 Tile TDAQi interfaces with L0Calo, Global, L0Muon and Felix system

- **Error free communication achieved at 9.6 Gbps between the CPM and the TDAQi**
- **Carrier**: Power distribution, communication between CPM, TileCoM, TDAQi, DCS

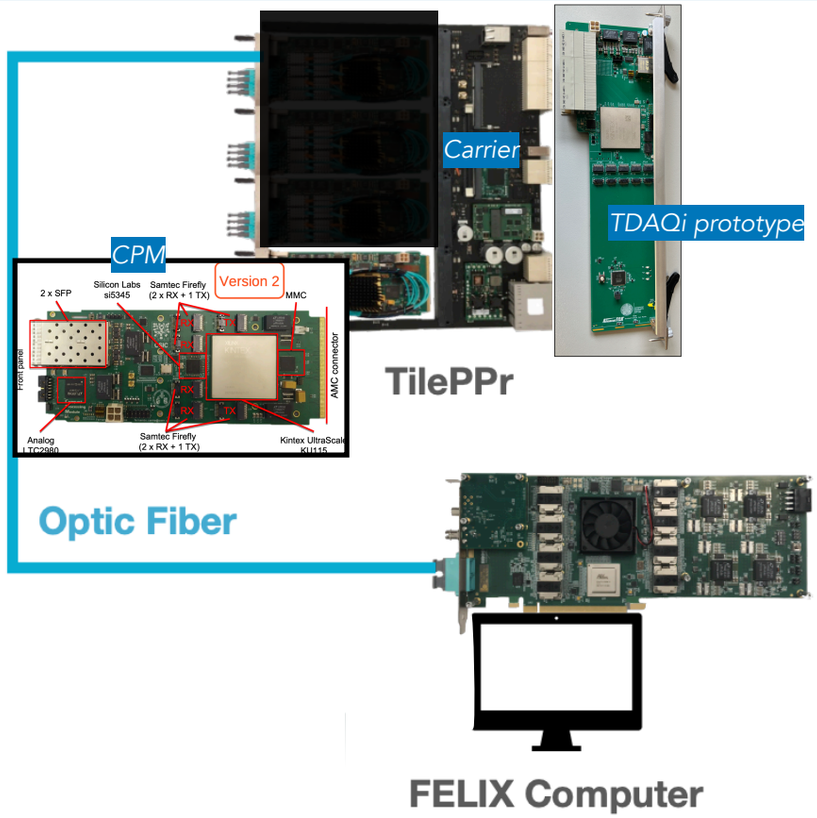

- **Compact Processing Module (CPM)** Readout and control TileCal modules, Energy reconstruction, calibration and transmission to TDAQi
  - **Each CPM operates 2 TileCal modules (up to 8 modules per PPr)**
  - **Data handling from on-detector electronics and signal reconstruction**
    - **Real time reconstruction at 40 MHz per PPr**
  - **Communication with timing trigger and control system for the LHC**
  - **Tests (thermal) and test-beams planned at CERN**

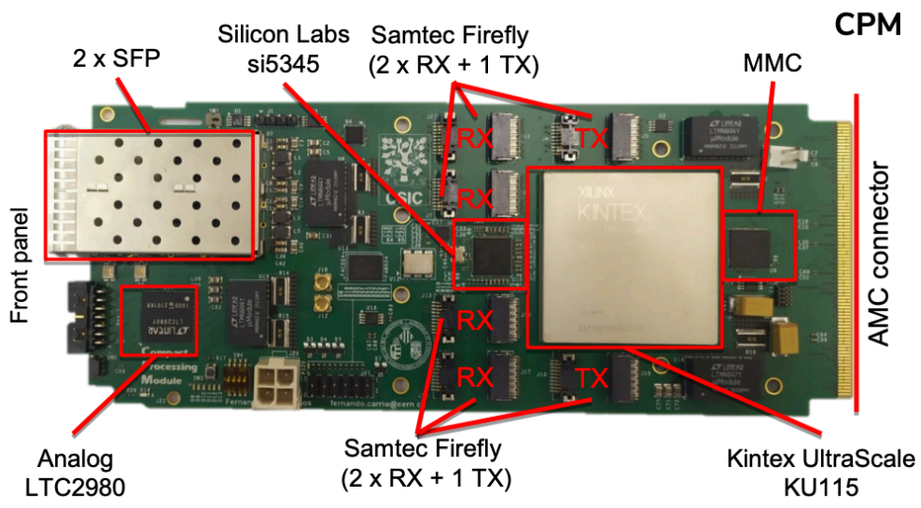

Off-detector Electronics

- **Tile Computer on Module (TileCoM)** Interfaces the TDAQi system and the TilePPr with DCS, sensor monitoring
  - Post-layout simulations performed for different components, pending validation

- **TDAQi:** transmits trigger objects (tower or groups of cells) to the ATLAS trigger system
  - Building and synchronous transmission of trigger objects to the different trigger sub-stems
  - Sends monitoring data to FELIX
  - **Final design ready and production-readiness planned next year**

- **Front End Link eXchange (FELIX)** used for all ATLAS sub-detectors as primary interface between FE and DAQ.

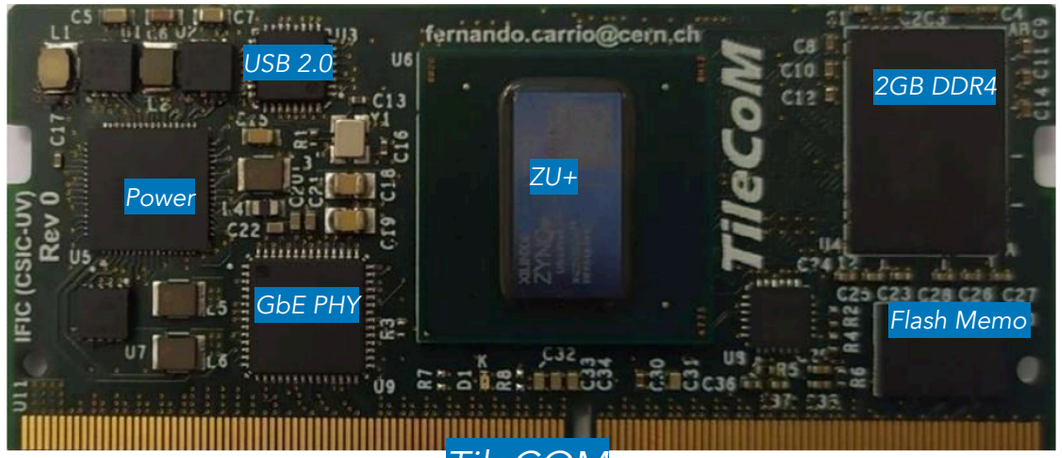

TileCOM

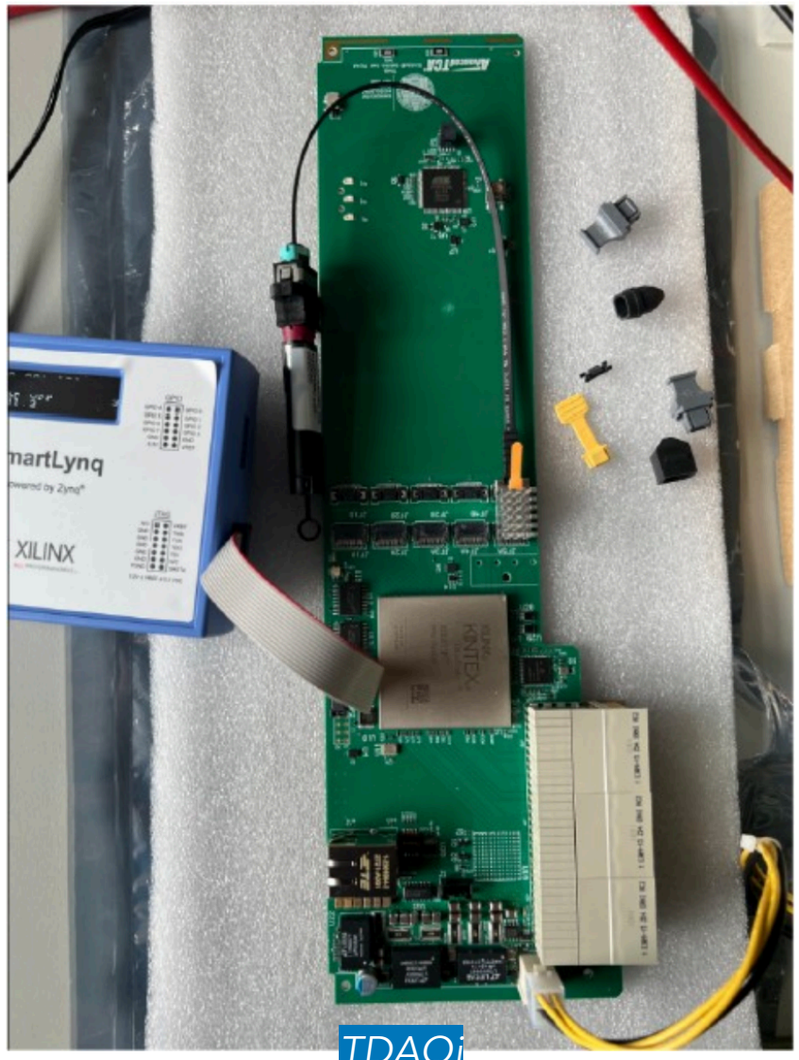

TDAQi

Calibration system and Qualification

- **New DAQ and control electronics are needed for the laser calibration system**
  - A continuous light source to simulate pile up will be used in addition to the pulsed laser source

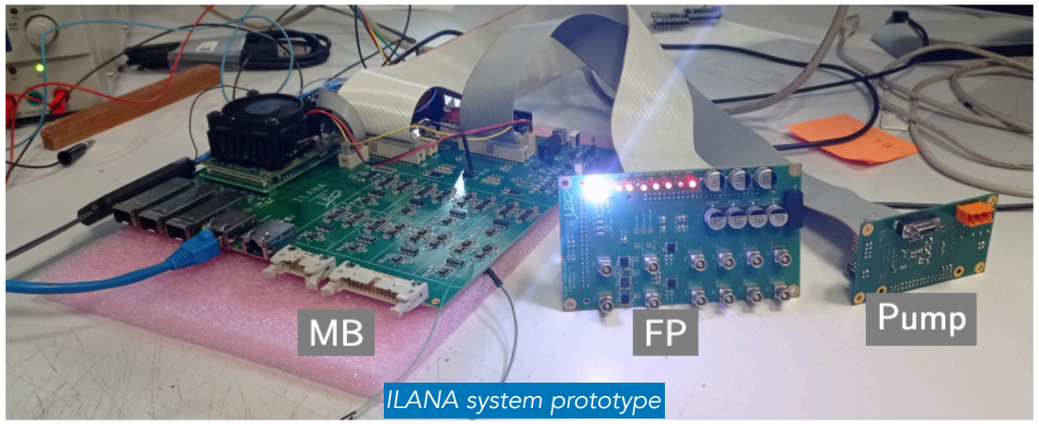

ILANA system prototype

- **ILANA (Interface for the LAser system to the New Acquisition infrastructure) - New DAQ and control electronics**
  - First tests of prototype with LASER system replica performed

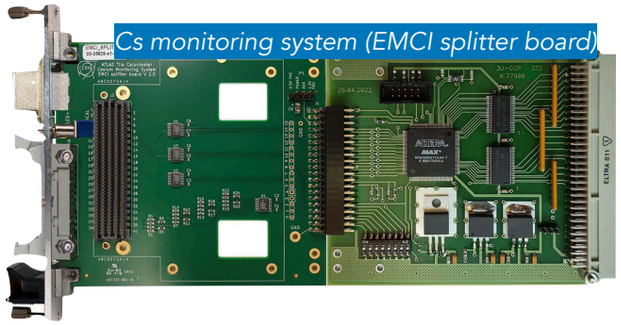
Cs monitoring system (EMCI splitter board)

- **Cesium system: redesign using EMCI/EMP***
  - Prototypes designs of new EMCI splitter boards and Cs-boards are ready, some prototypes are under-production


PROMETEO test bench

- **PROMETEO (Portable Read Out ModulE for Tilecal ElectrOnics):**
  - Prototype ready and functional

***EMCI** Embedded Monitoring and Control Interface
EMP Embedded Monitoring Processor

Tile Demonstrator

- **A demonstrator system of the TileCal upgrades was implemented**
  - A TileCal module (LBA14) equipped with prototype mechanics and upgrade electronics
  - It is backwards compatible with current and Phase-II readout systems
- It was inserted in ATLAS in July 2019 and is/will be kept in ATLAS for Run-3
- **Has proven to be very useful to test the electronics and identify problems early on**
  - Demonstrator gives stable performance, low noise and good CIS and laser signal
- Was used to record ATLAS data during 2022 run, in addition to cosmic data and beam splash events

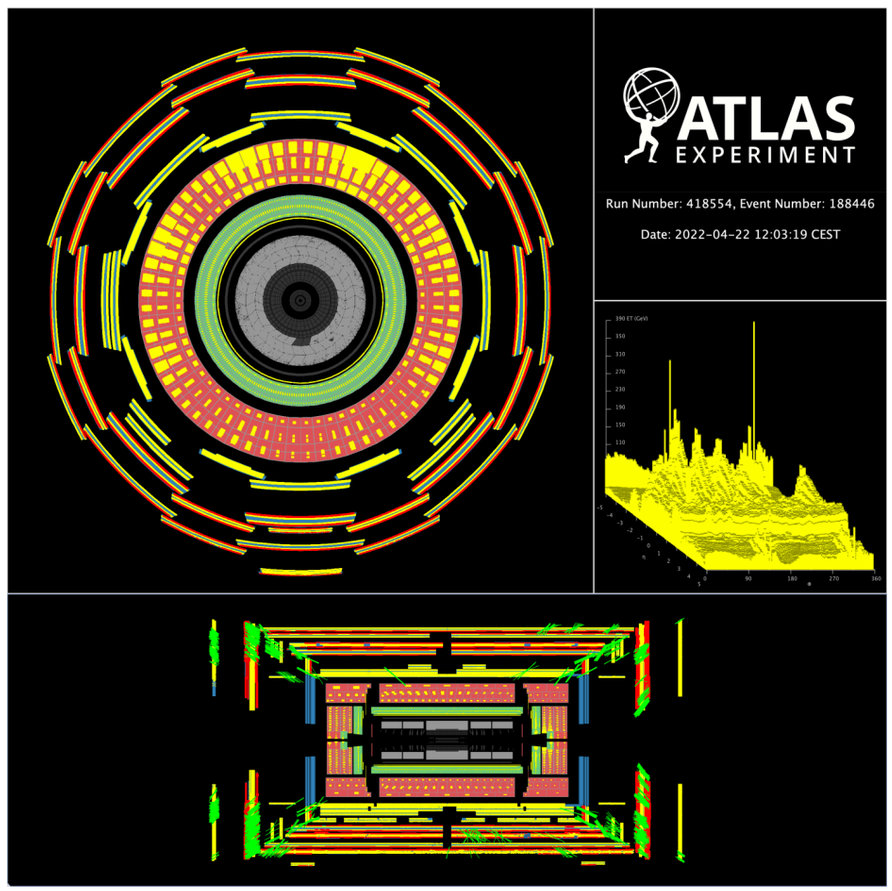

Beam splash events

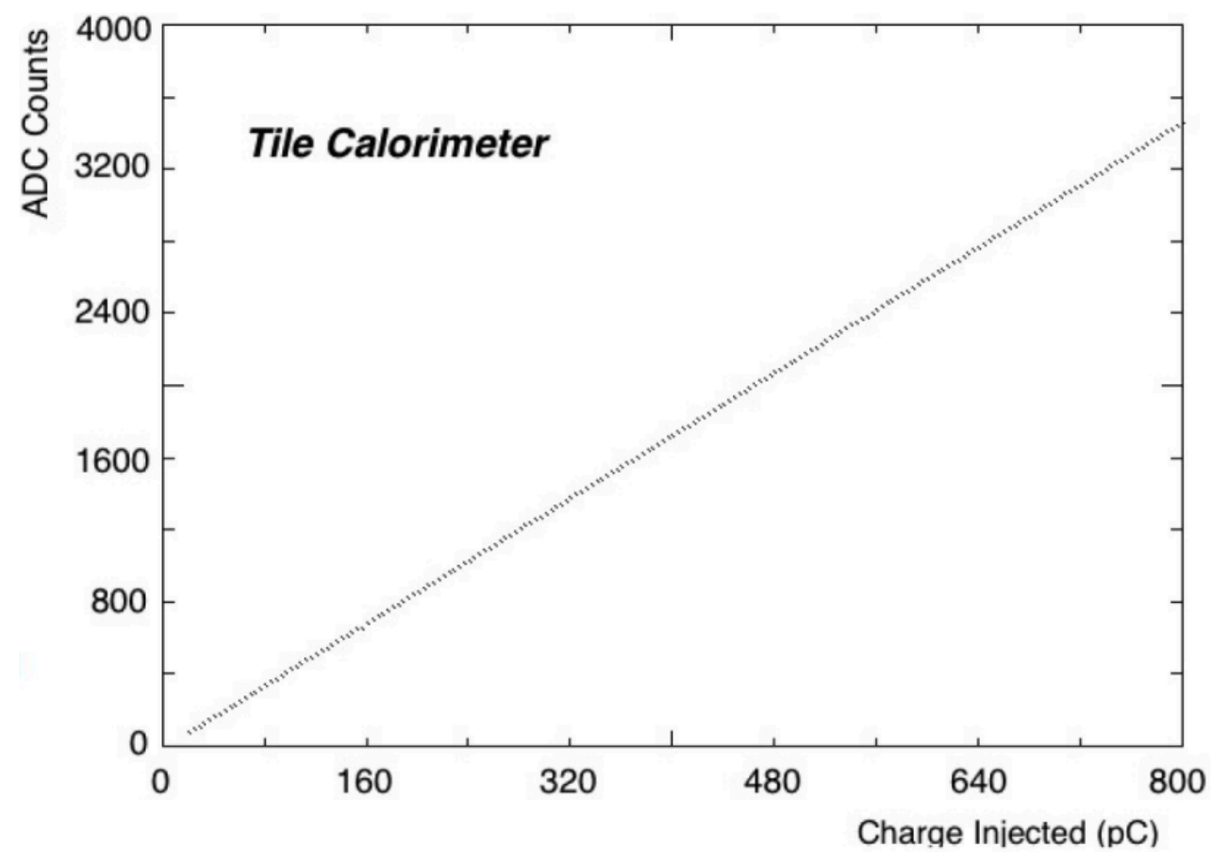

Charge injection scenes

Test beam

- **8 Test beam campaigns were performed using the CERN SPS beam line from 2015-2022**
  - Performing hardware tests and validation, and performing physics studies
- **3 modules from the calorimeter (two Long-Barrel and one Extended-Barrel) are used in the setup**
  - A half of LB module equipped with a prototype of the new Phase-II upgrade electronics.
- TileCal setup in SPS beam line includes both old and current electronics
  - EBC module is equipped with an EB SD with including phase-II electronics (since June 2022)
- **Different particle species were used in the tests: electrons, muons and different hadronic beams at different energies**

TileCal setup in CERN SPS beam line

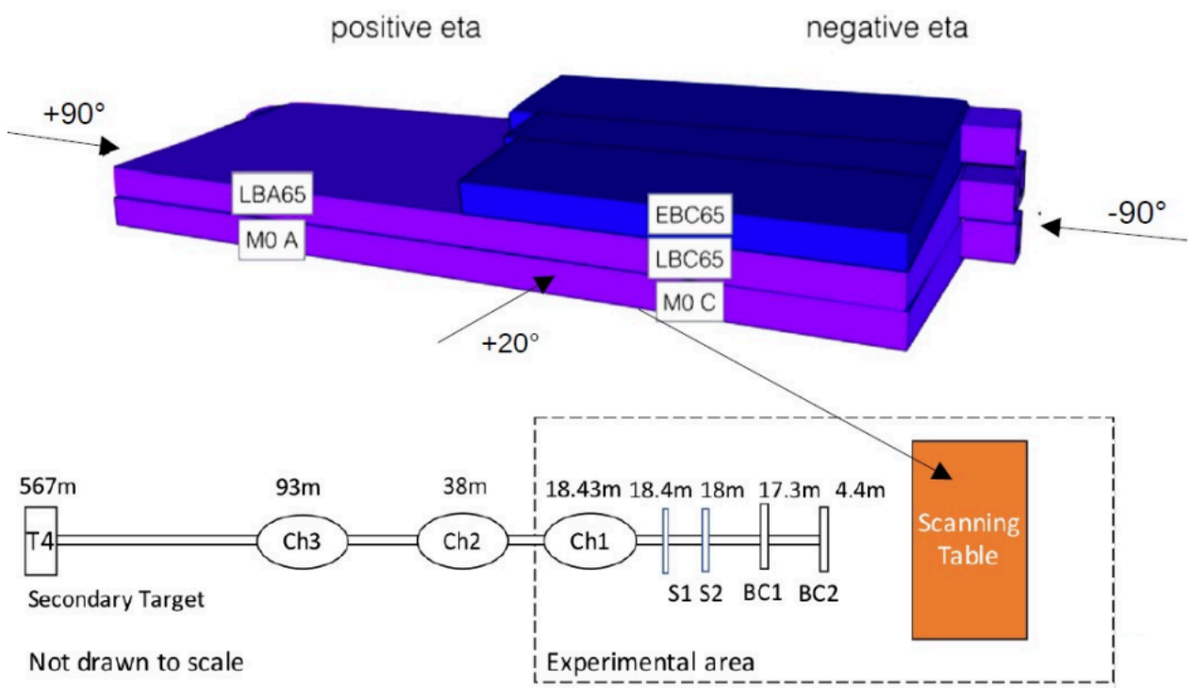

Test beam results

- **Muons (160 GeV) traverse the TileCal modules at 90° angle to test equalisation of the cell response**
  - ***Excellent agreement between data and simulation for layer uniformity (within 1%)***
- Electrons at different energies to determine calorimeter response in pC/GeV
  - Used to determine linearity of response with energy and test uniformity and energy resolution

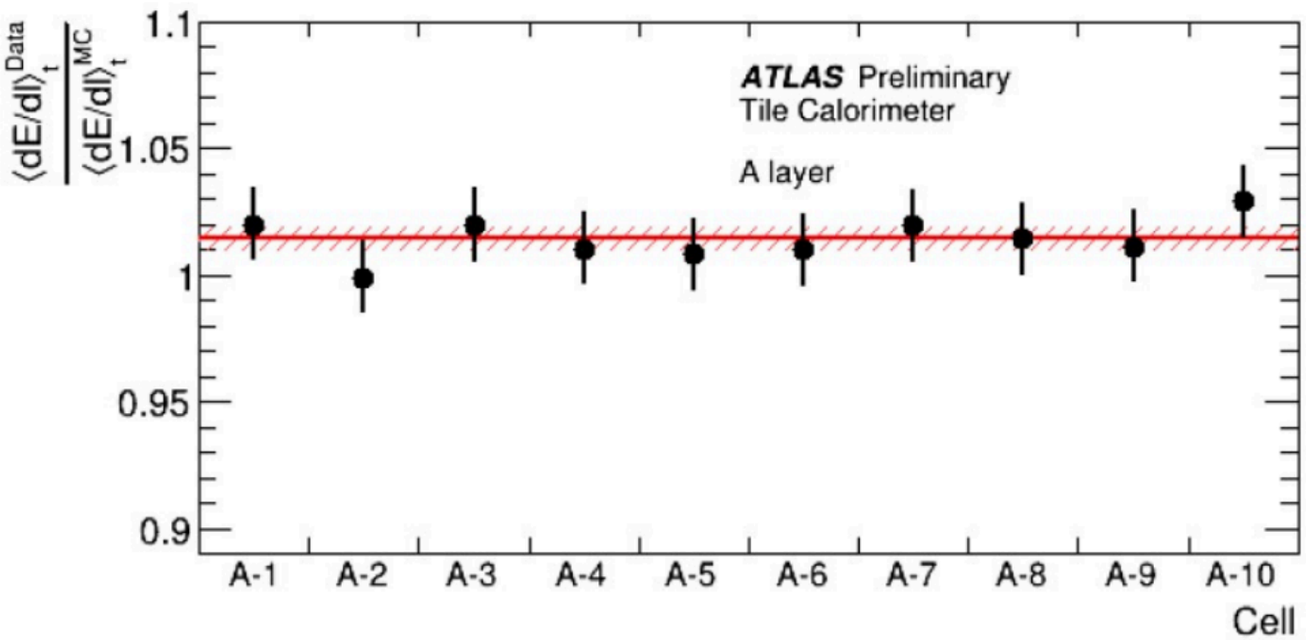

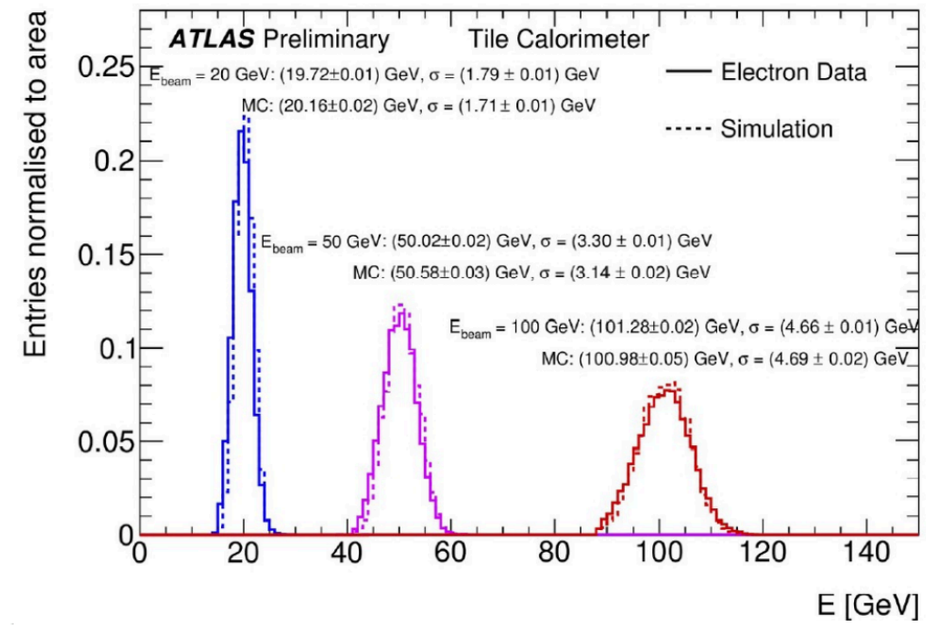

- **Hadron beams are used to validate and improve the modelling for jet and tau measurements**
  - Challenging to identify with high precision beam contents
  - Energy response determined as function of beam energy
  - Data MC variation are within 1-2% for the different particle types
  - Results published in EPJC 81 (2021) 549

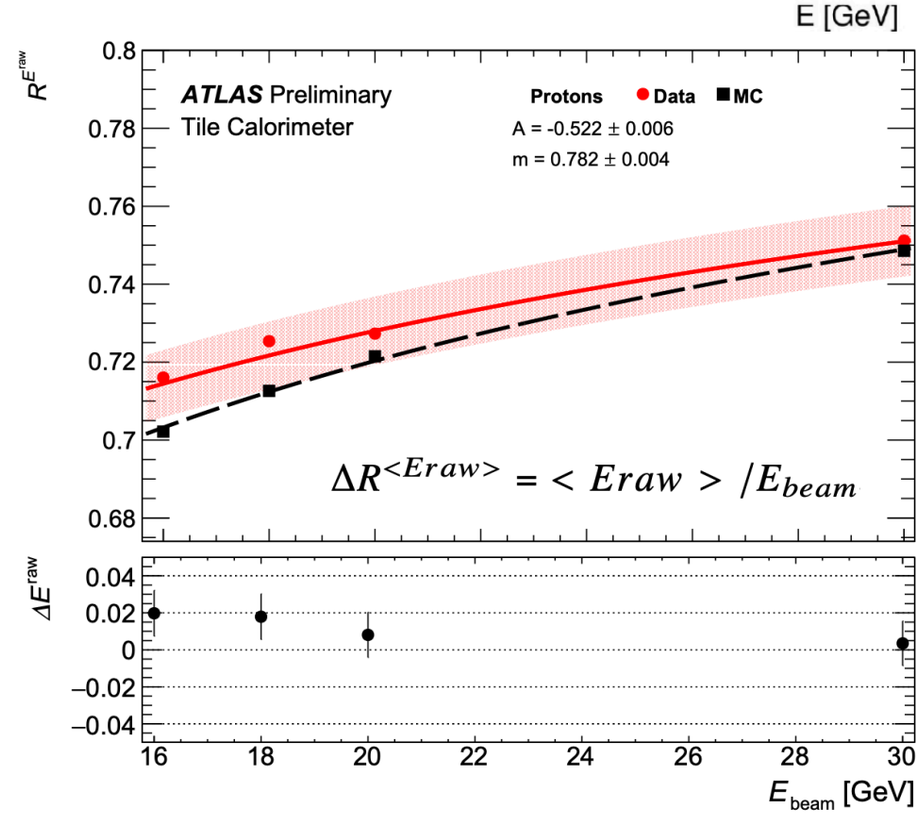

Summary

- **The HL-LHC will bring a lot of challenges to the ATLAS TileCal detector**
  - Radiation damage
  - Higher pileup conditions
  - Higher luminosity and readout rates
- **A comprehensive plan for TileCal Phase-II upgrades is progressing very well and on-time to accommodate HL-LHC conditions**
  - Upgrades include full replacement and redesign of on- and off-detector readout electronics and replacement of 10% of the PMTs
  - New modular mechanical design for better accessibility and maintenance
- **Many parts of the project already in production (passing all design and validation tests)**
- A test-beam campaign has helped to test validation of Phase-II electronics using latest prototypes/preproduction and full system integration
- A working demonstrator with phase-II electronics is in place in the ATLAS detector for continuous testing and validation using Run-3 data

Thank you for your attention!