Far-Forward Detectors and Physics with ePIC @ the EIC

Alex Jentsch, *on behalf of the ePIC Collaboration*

30th International Workshop on Deep-Inelastic Scattering and Related Subjects

March 27th-31st, 2023

Michigan State University

East Lansing, Michigan

BROOKHAVEN NATIONAL LABORATORY

Jefferson Lab

U.S. DEPARTMENT OF ENERGY | Office of Science

What is meant by Far-Forward?

hadronic calorimeters | solenoid coils | e/m calorimeters

MAPS tracker | MPG trackers | ToF, DIRC, RICH detectors

Full ePIC overview: See talk by R. Millner WG6; Tuesday @ 9am

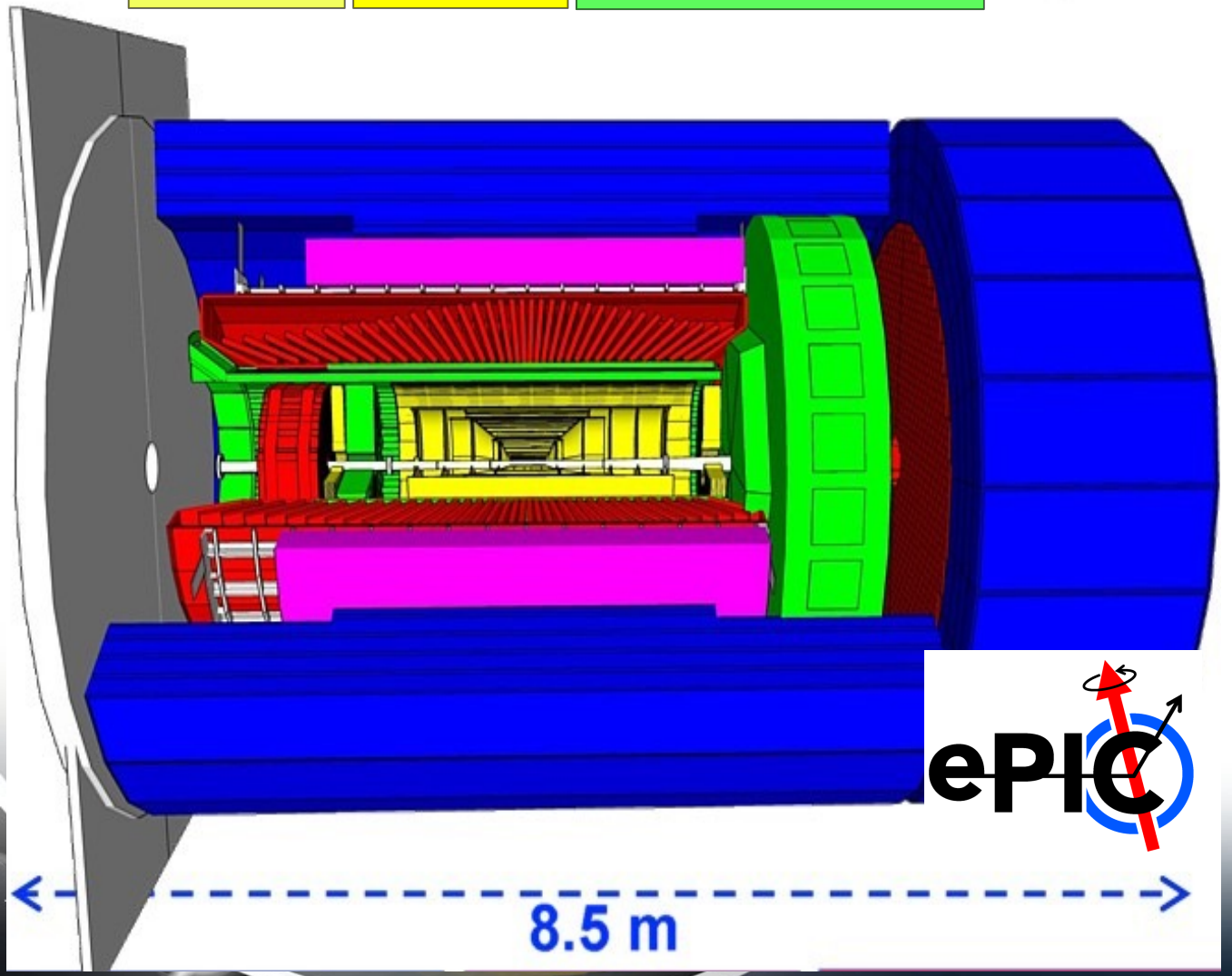

What is meant by Far-Forward?

Full ePIC overview: See talk by R. Millner WG6; Tuesday @ 9am

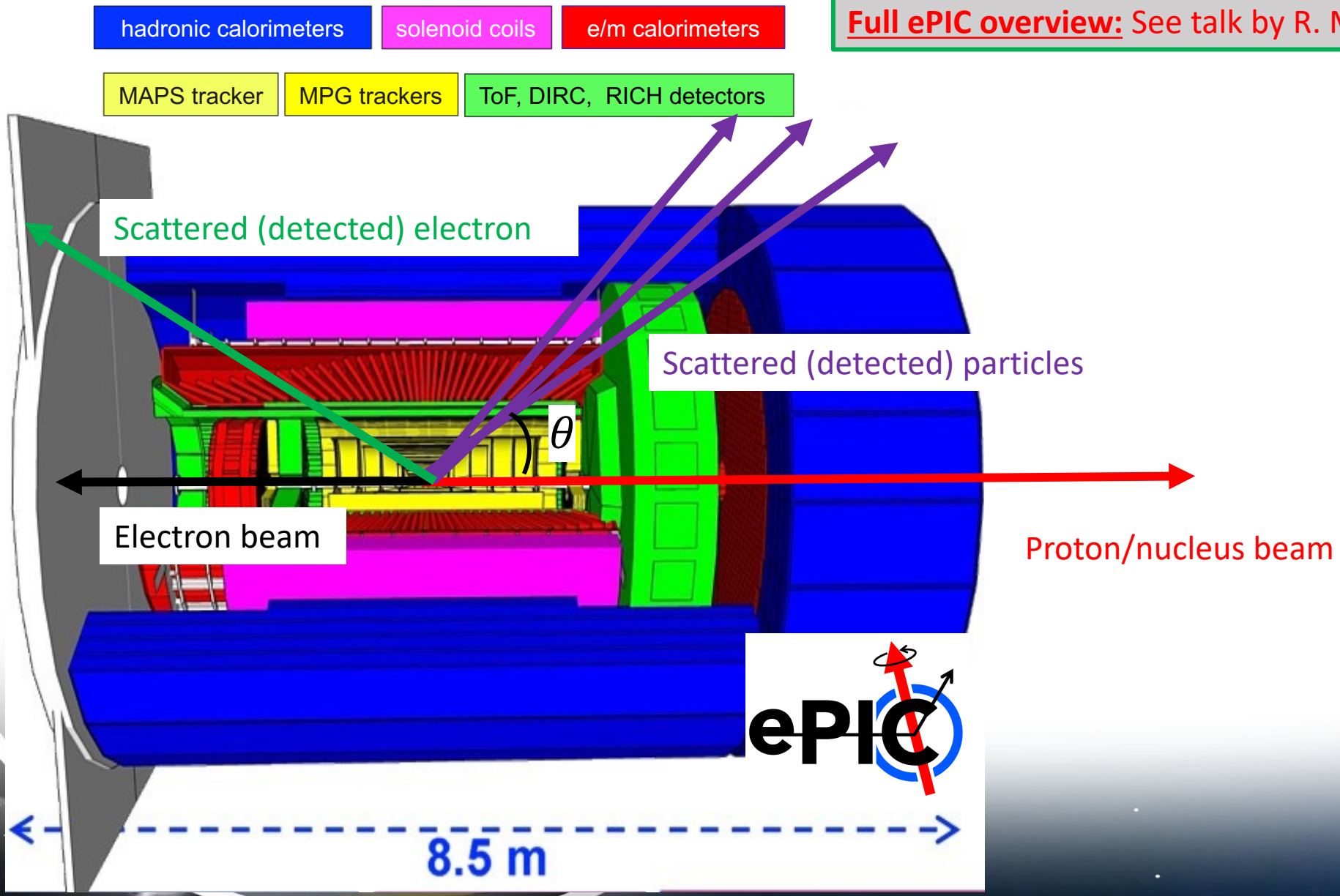

What is meant by Far-Forward?

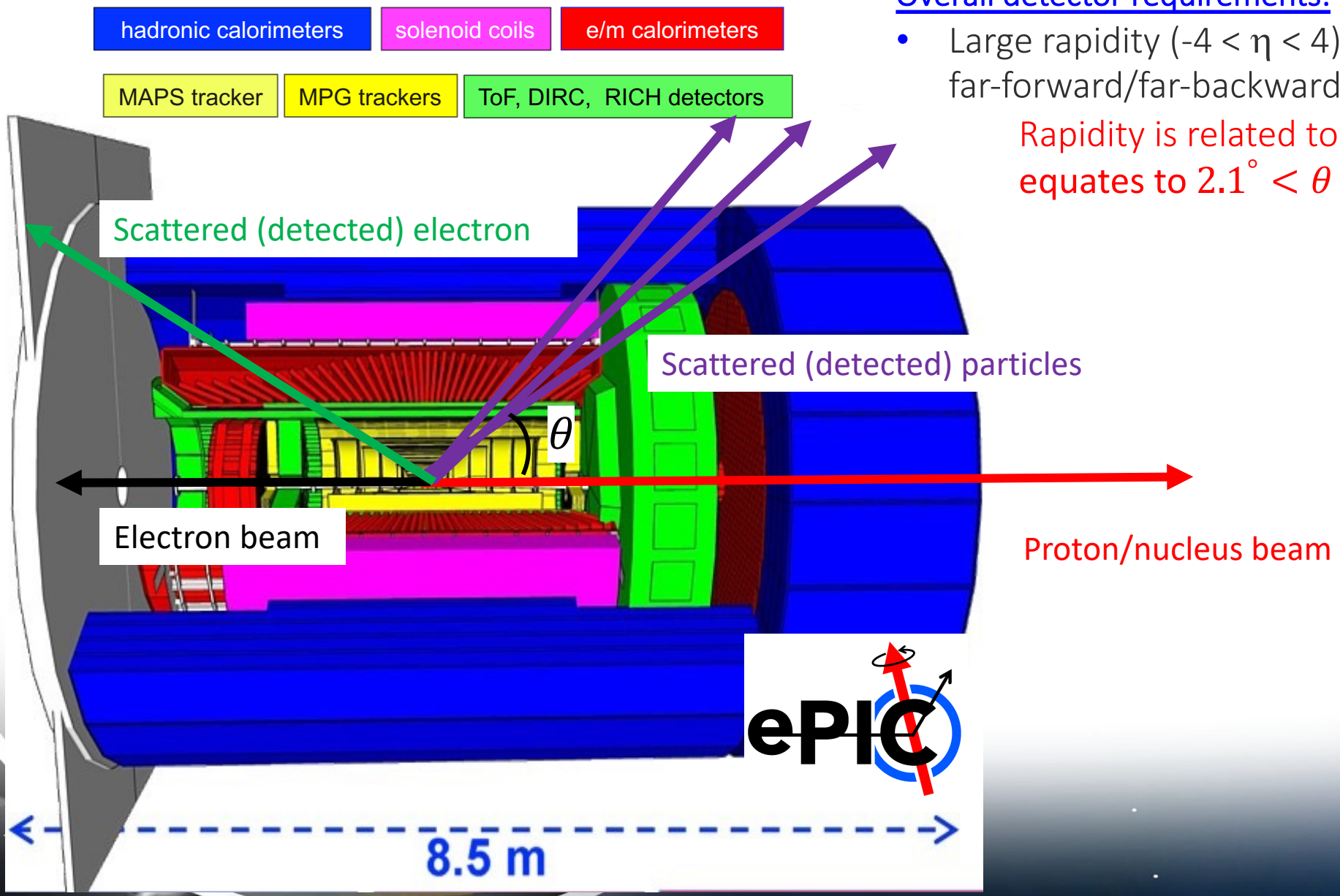

Overall detector requirements:

- Large rapidity (-4 < η < 4) coverage; and far beyond in far-forward/far-backward detector regions

Rapidity is related to the polar angle → 0 < η < 4 equates to $2.1^{\circ} < \theta < 90^{\circ}$

$$\eta = -ln\left(tan(\theta/2)\right)$$

pseudorapidity

What is meant by Far-Forward?

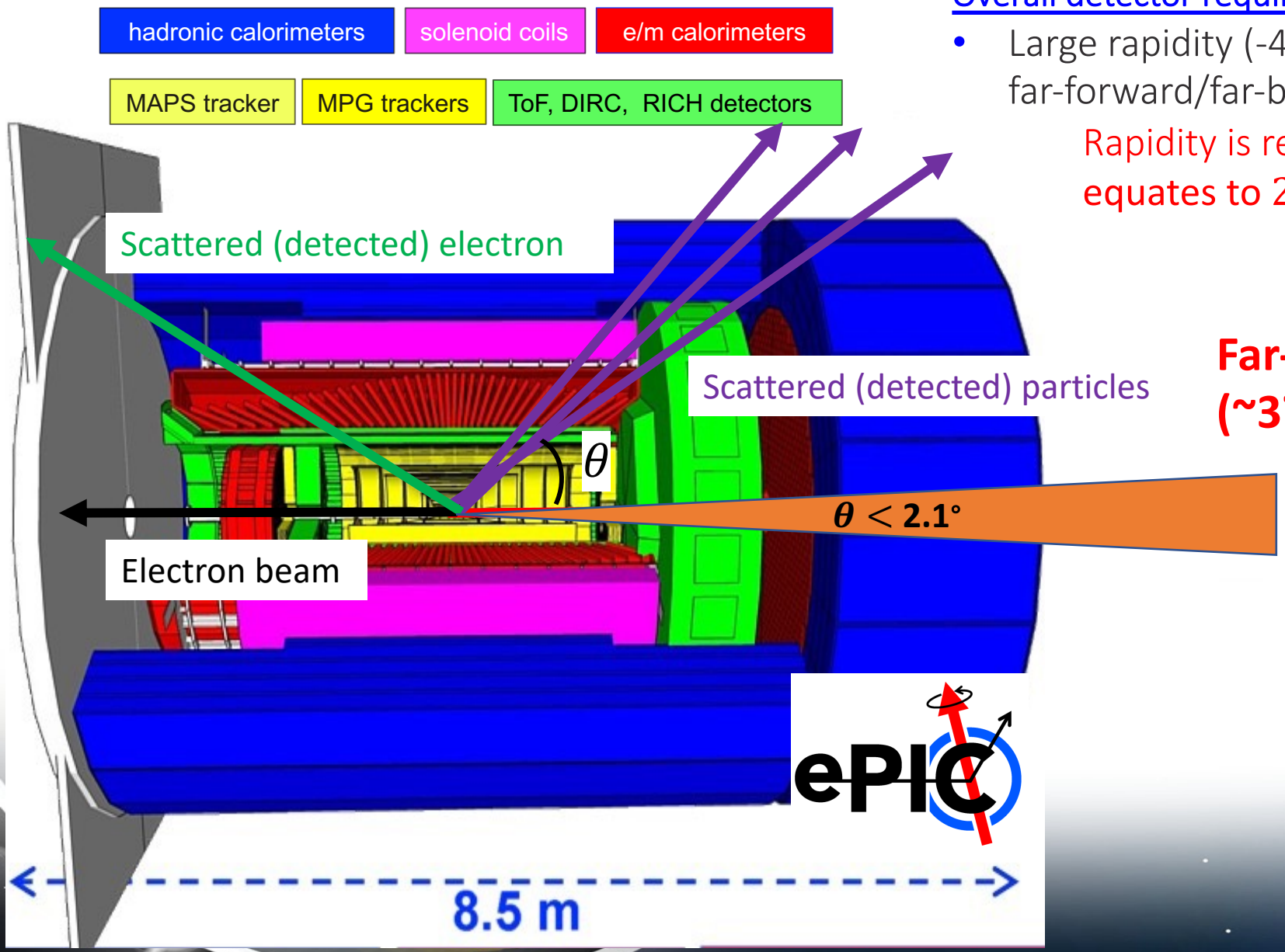

Overall detector requirements:

- Large rapidity (-4 < η < 4) coverage; and far beyond in far-forward/far-backward detector regions

Rapidity is related to the polar angle → 0 < η < 4 equates to $2.1^{\circ} < \theta < 90^{\circ}$

$\eta = -ln(tan(\theta/2))$

pseudorapidity

Far-forward here means $\theta < 2.1°$ (~37 mrad)

What is meant by Far-Forward?

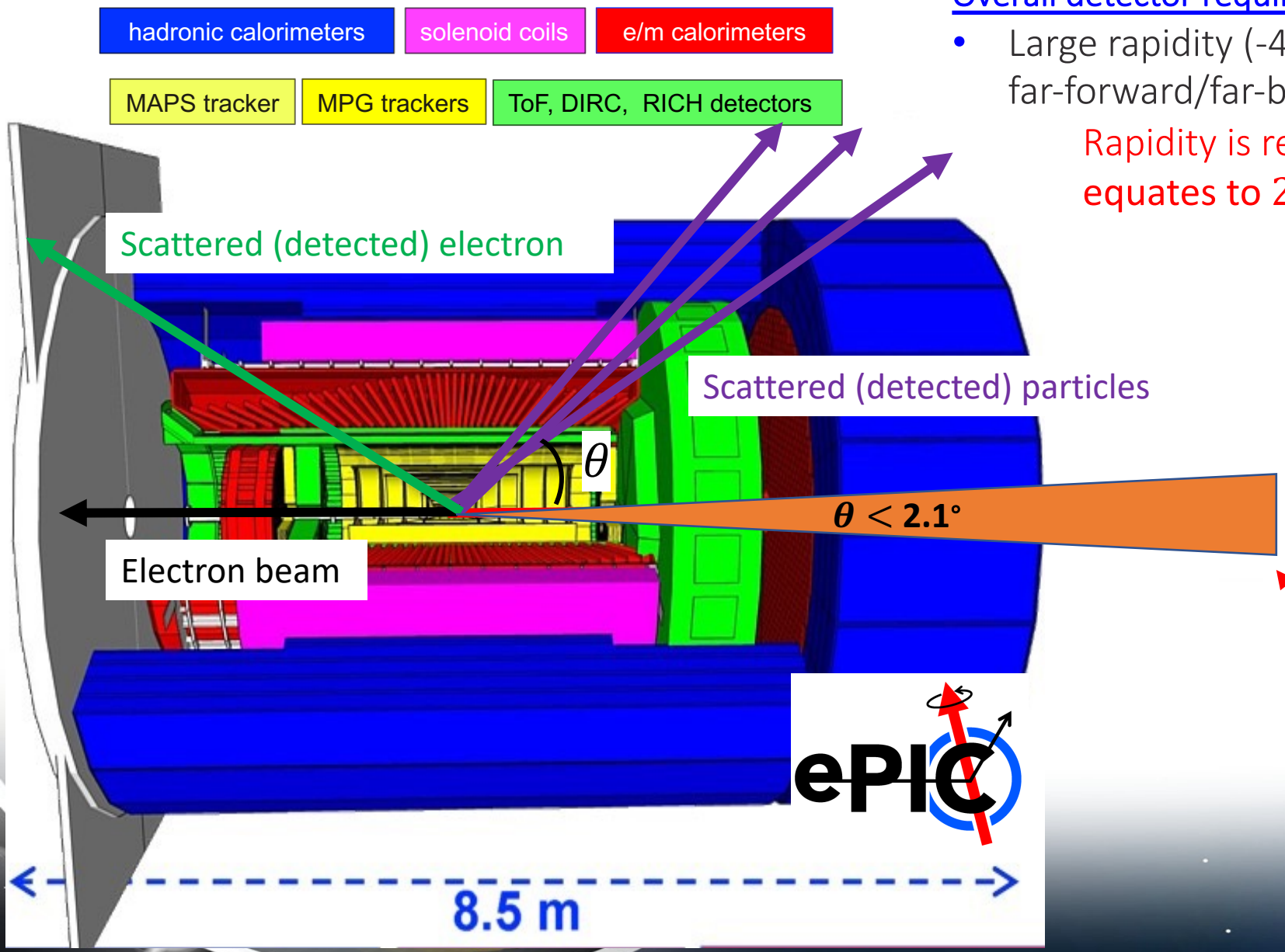

Overall detector requirements:

- Large rapidity (-4 < η < 4) coverage; and far beyond in far-forward/far-backward detector regions

Rapidity is related to the polar angle → 0 < η < 4 equates to $2.1^{\circ} < \theta < 90^{\circ}$

$$\eta = -ln(tan(\theta/2))$$

pseudorapidity

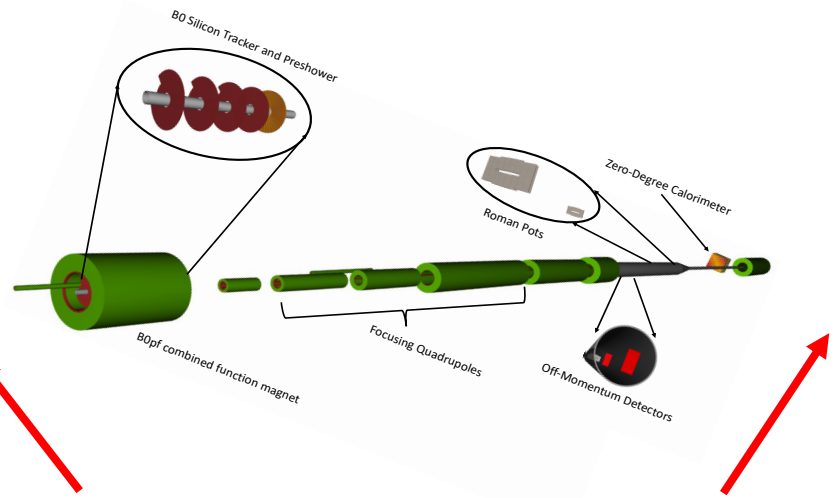

Need detectors here!!

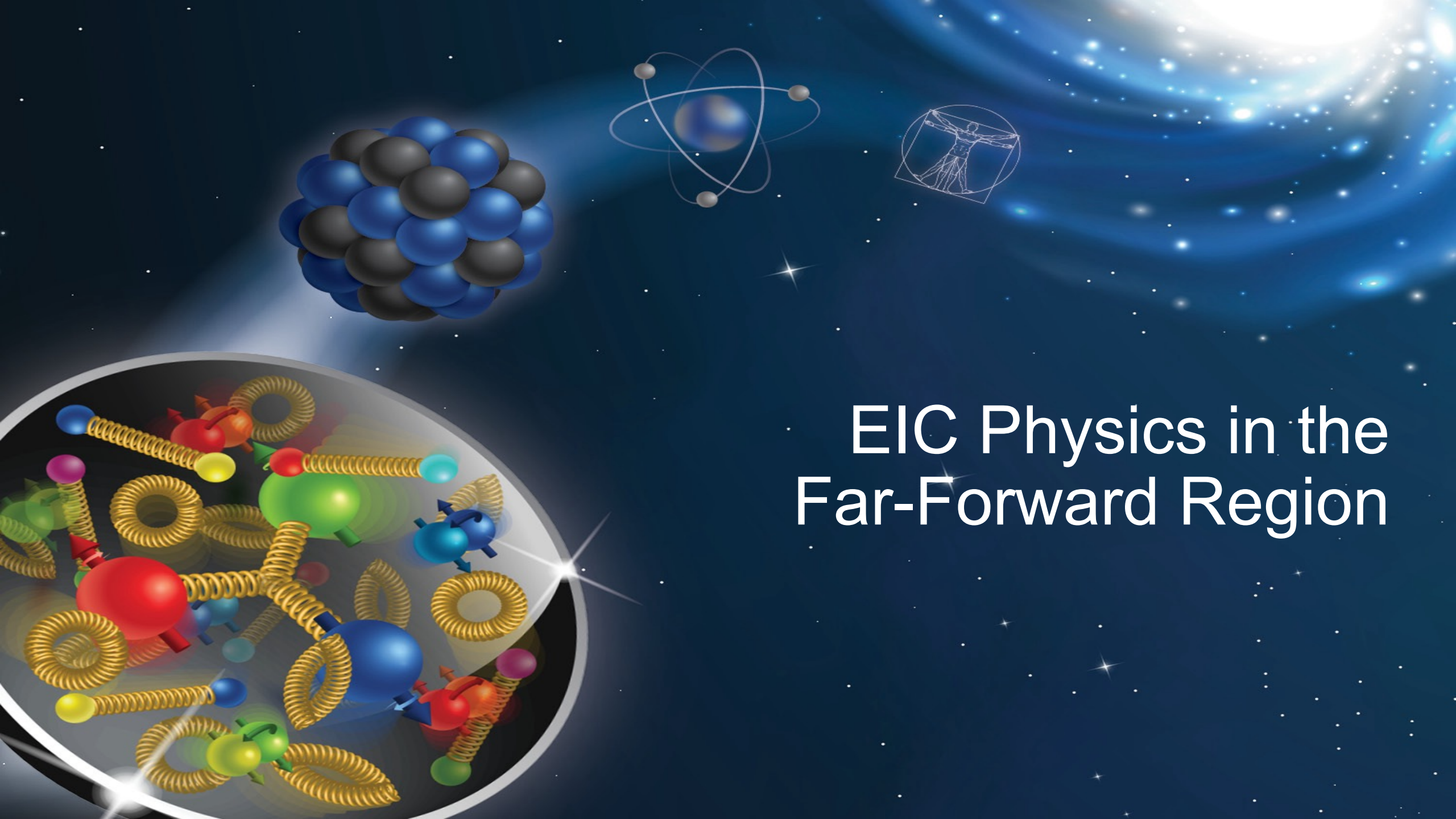

EIC Physics in the Far-Forward Region

(some) Far-Forward Processes at the EIC

e+p DVCS

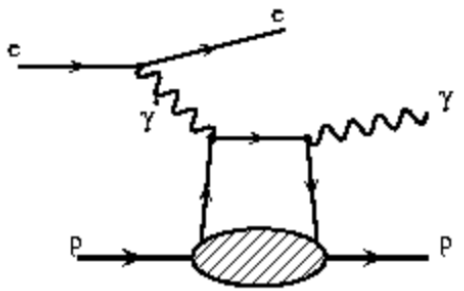

e+d exclusive J/Psi with p/n tagging

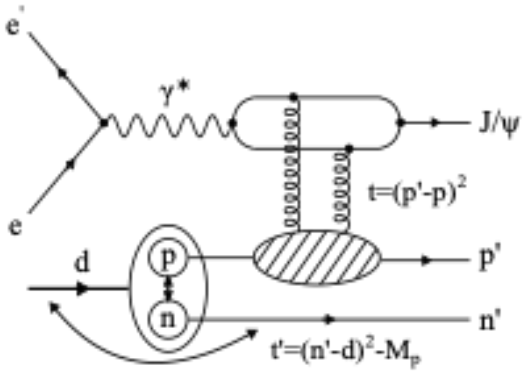

spectator tagging in light nuclei

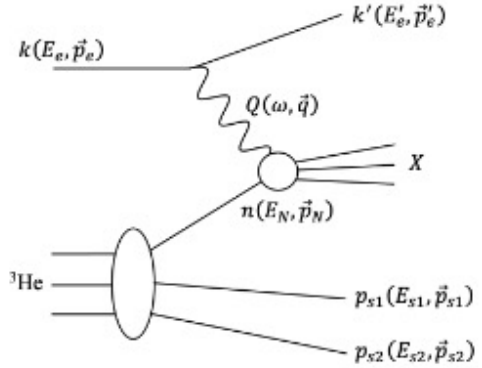

coherent/incoherent J/ψ production in e+A

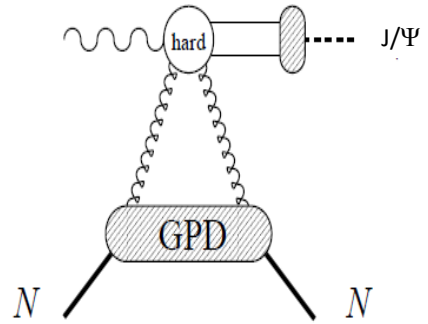

Sullivan process

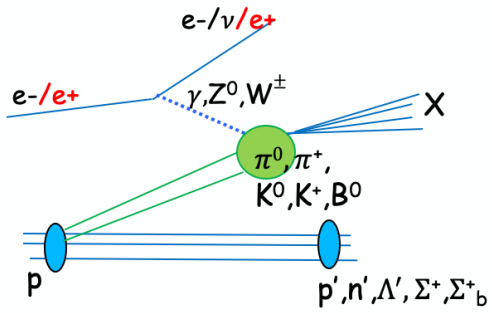

Quasi-elastic electron scattering

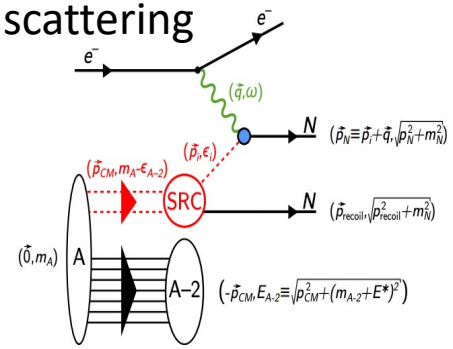

u-channel backward exclusive electroproduction

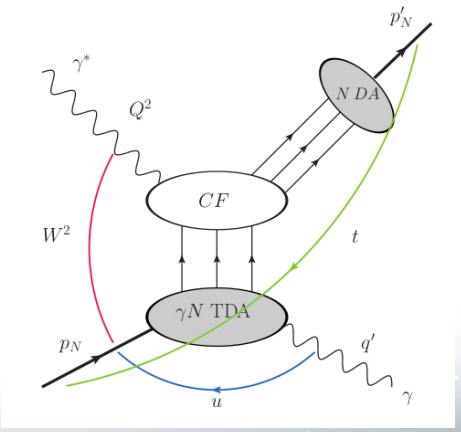

…and MANY more!

(some) Far-Forward **Physics** at the EIC

e+p DVCS

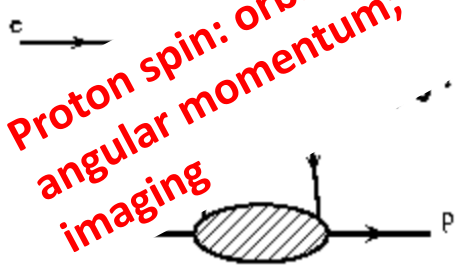

e+d exclusive J/Psi with p/n tagging

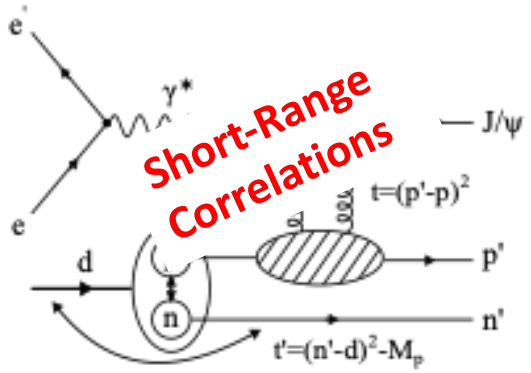

spectator tagging in light nuclei

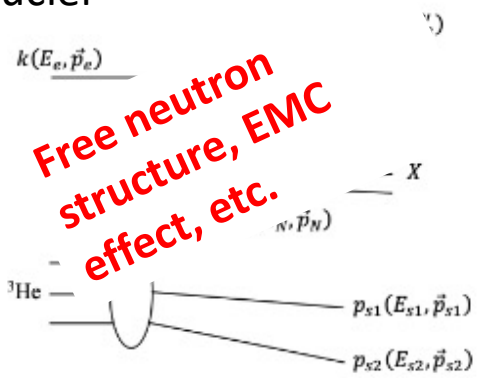

coherent/incoherent J/ψ production in e+A

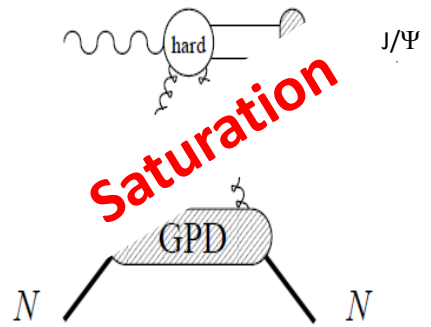

Sullivan process

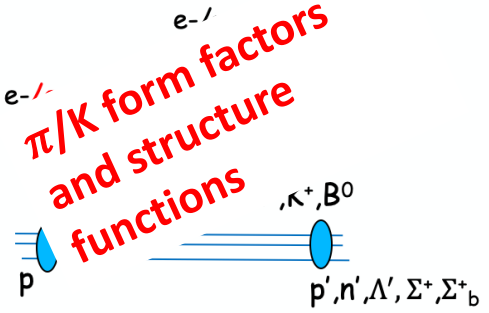

Quasi-elastic electron scattering

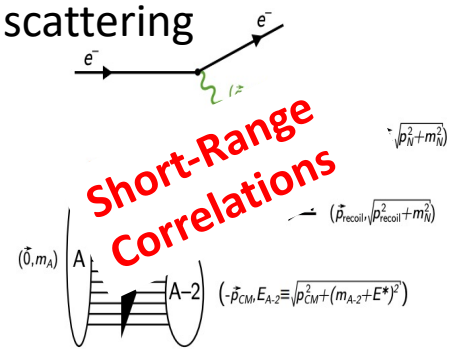

[1] Z. Tu, A. Jentsch, et al., Physics Letters B, (2020)
[2] I. Friscic, D. Nguyen, J. R. Pybus, A. Jentsch, *et al.*, Phys. Lett. B, **Volume 823**, 136726 (2021)
[3] W. Chang, E.C. Aschenauer, M. D. Baker, A. Jentsch, J.H. Lee, Z. Tu, Z. Yin, and L.Zheng, Phys. Rev. D **104**, 114030 (2021)
[4] A. Jentsch, Z. Tu, and C. Weiss, Phys. Rev. C **104,** 065205, (2021) **(Editor's Suggestion)**

u-channel backward exclusive electroproduction

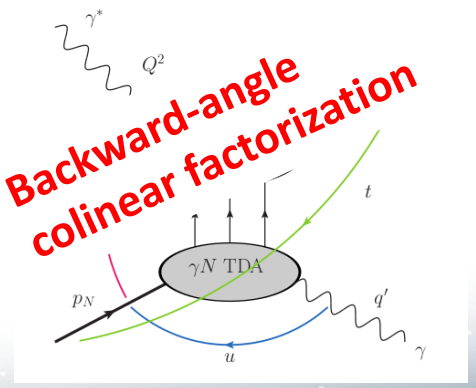

…and MANY more!

(some) Far-Forward **Physics** at the EIC

- Physics channels require tagging of **charged hadrons** (protons, pions) or **neutral particles** (neutrons, photons) at **very-forward rapidities ($\eta > 4.5$).**
- Different final states require tailored detector subsystems.
- Various collision systems (e.g. e+p, e+d, e+Au) provide unique challenges.
- Integration of EIC far-forward detectors uniquely challenging due to presence of machine components, space constraint, apertures, etc.

…and MANY more!

The ePIC Far-Forward Detectors

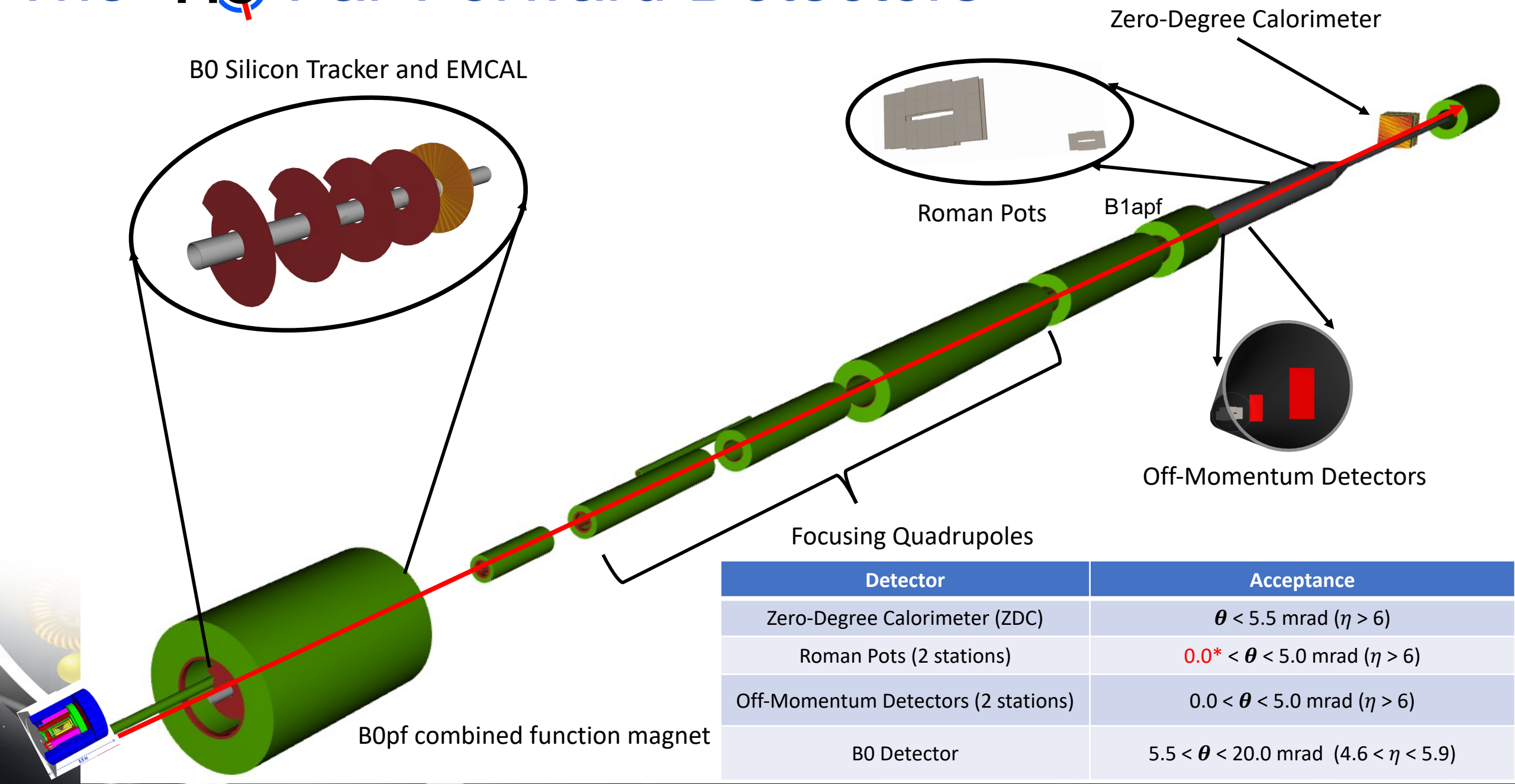

Detector	Acceptance
Zero-Degree Calorimeter (ZDC)	$\theta < 5.5$ mrad ($\eta > 6$)
Roman Pots (2 stations)	0.0* $< \theta < 5.0$ mrad ($\eta > 6$)
Off-Momentum Detectors (2 stations)	$0.0 < \theta < 5.0$ mrad ($\eta > 6$)
B0 Detector	$5.5 < \theta < 20.0$ mrad ($4.6 < \eta < 5.9$)

B0 Tracking and EMCAL Detectors

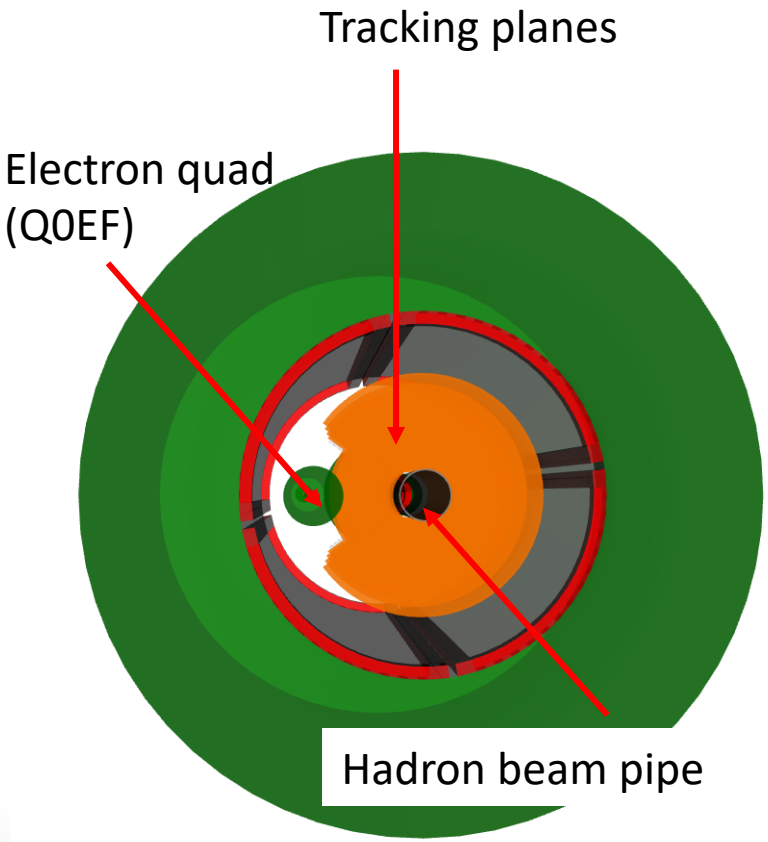

ePIC DD4HEP Simulation

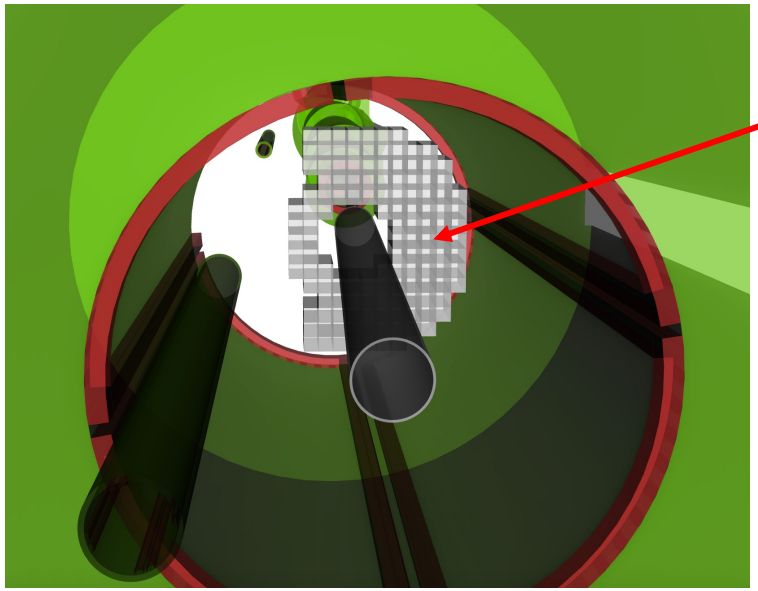

$PbWO_4$ EMCAL
(behind tracker)

- **Technology choices:**
  - **Tracking: IT3 or ITS2 MAPS (3 layers) + AC-LGADs (1 layer; in middle)**
  - **PbWO4 EMCAL or silicon preshower, depending on available space in final B0pf magnet design (pending).**

- **Status**
  - ✓ **Used to reconstruct charged particles and photons.**
    - ✓ **Acceptance: $5.5 < \theta < 20.0$ mrad**
    - ✓ **Focus now is on readout, new tracking software, and engineering support structure.**
  - ✓ **Stand-alone simulations have demonstrated tracking resolution.**
    - https://indico.bnl.gov/event/17905/
    - https://indico.bnl.gov/event/17622/

B0 Tracking and EMCAL Detectors

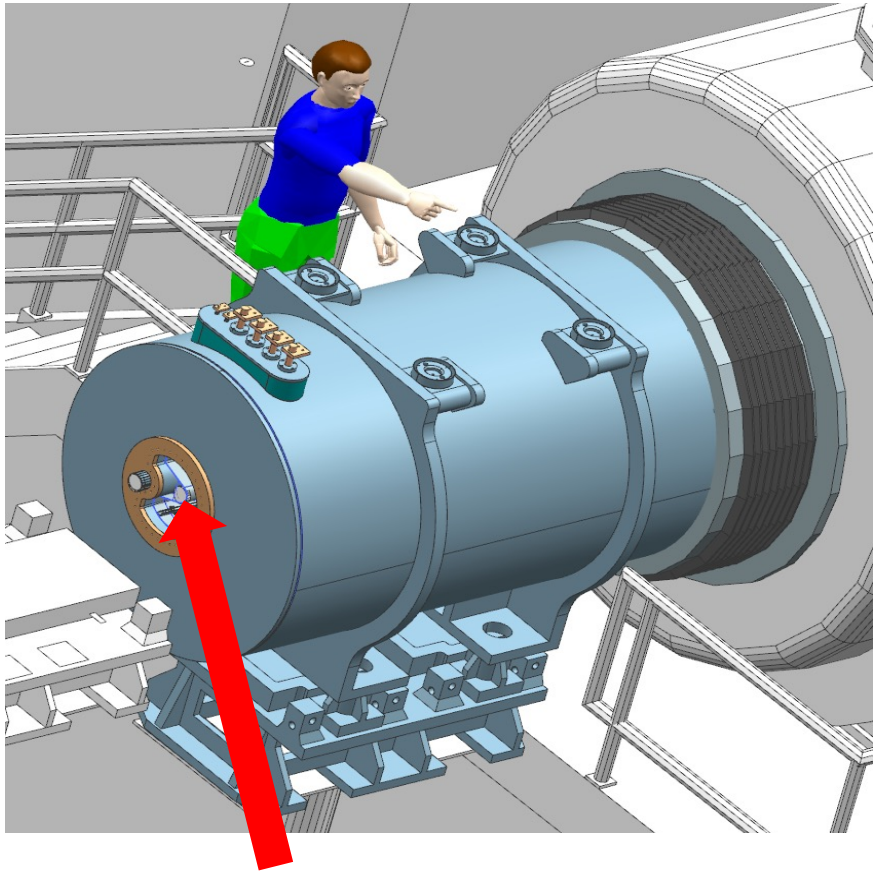

This is the opening where the detector planes will be inserted

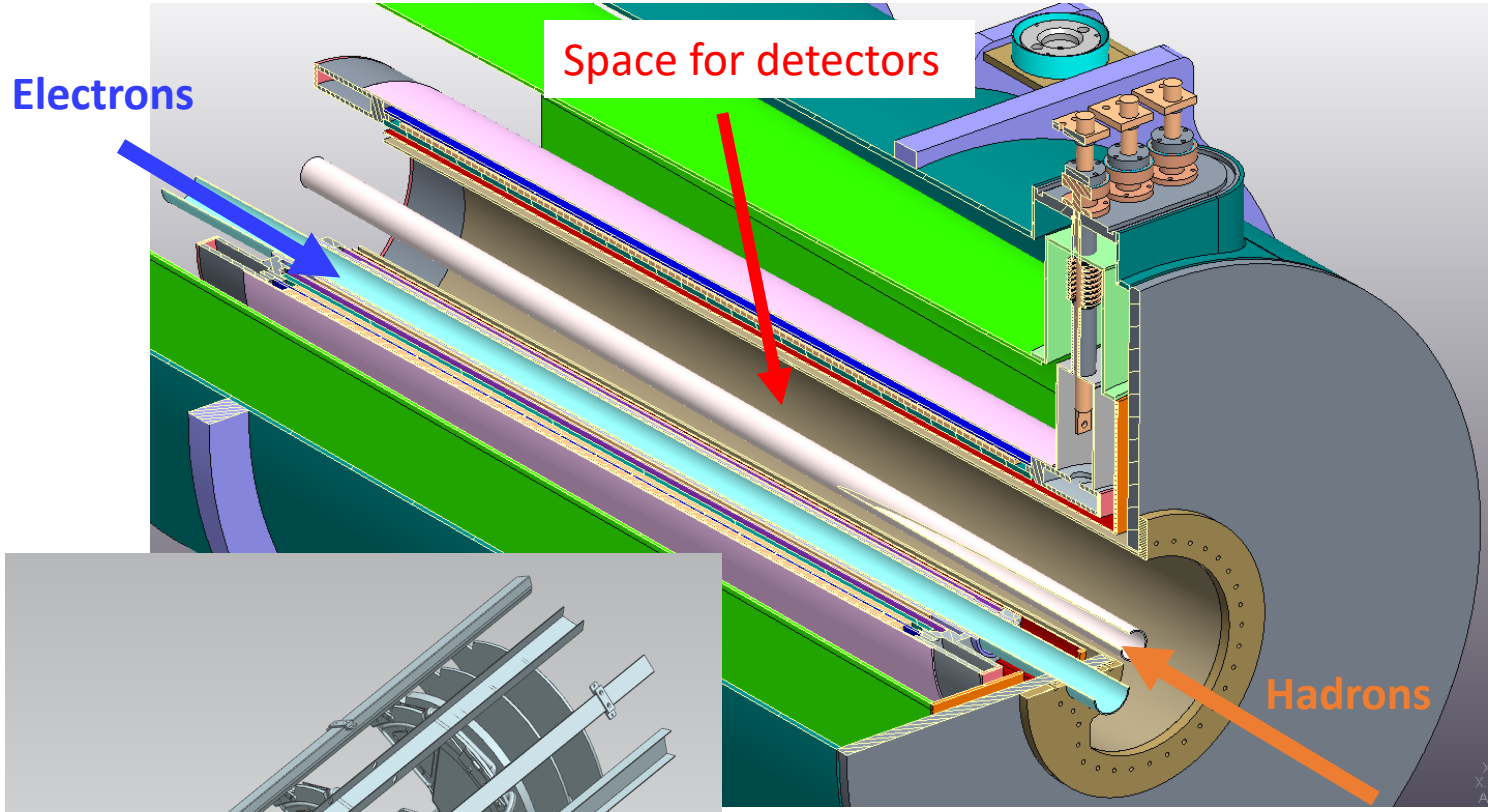

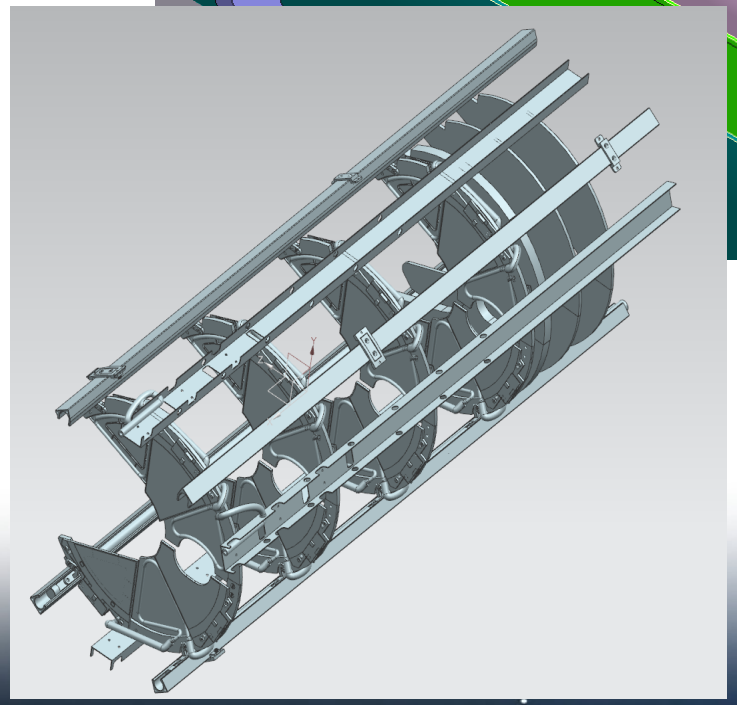

Credit: Ron Lassiter and Karim Hamdi

B0 Tracking and EMCAL Detectors

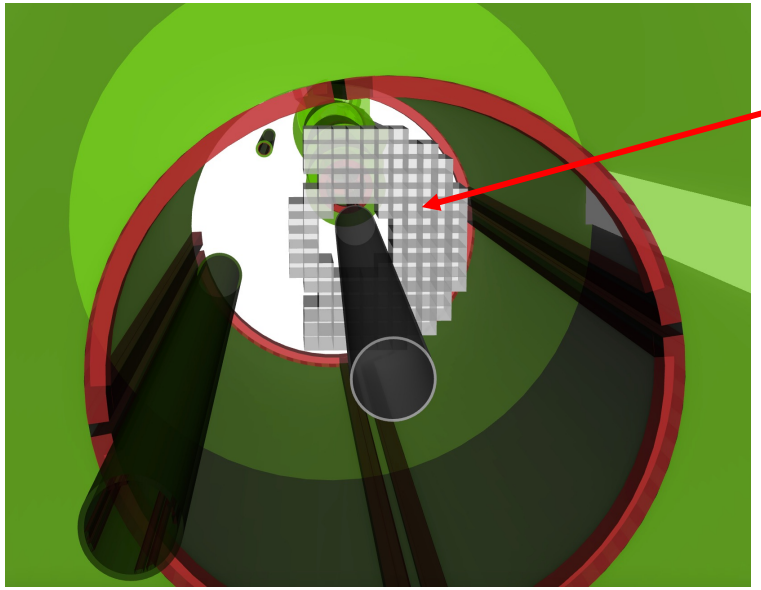

$PbWO_4$ EMCAL
(behind tracker)

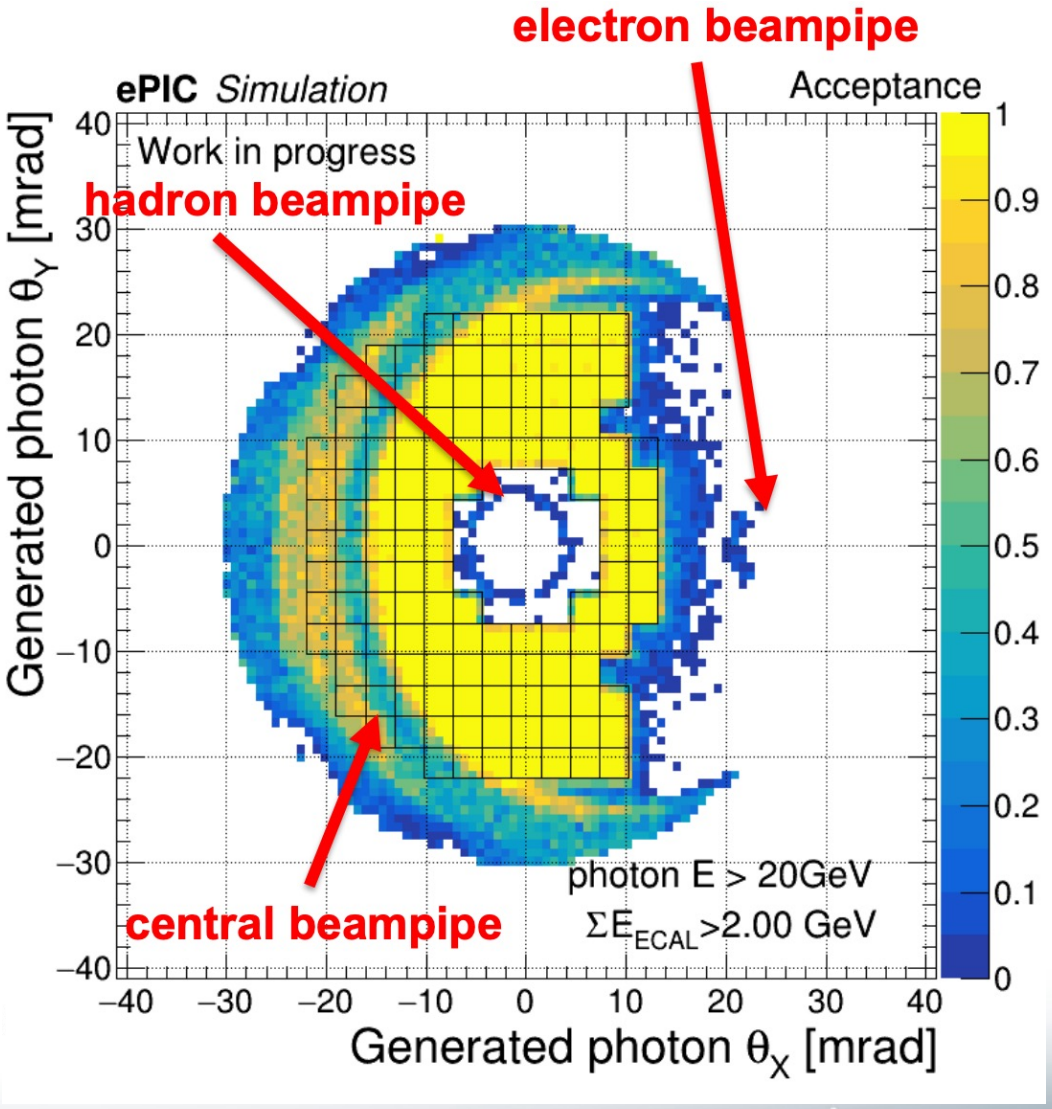

- **Status**
  - ✓ **Basic acceptances and resolutions studied.**
  - ✓ **Work needed on backgrounds, engineering/integration, and readout scheme.**
  - ✓ **Detailed Studies by Michael Pitt (Ben Gurien).**
    - **https://indico.bnl.gov/event/18001/**

Roman "Pots" @ the EIC

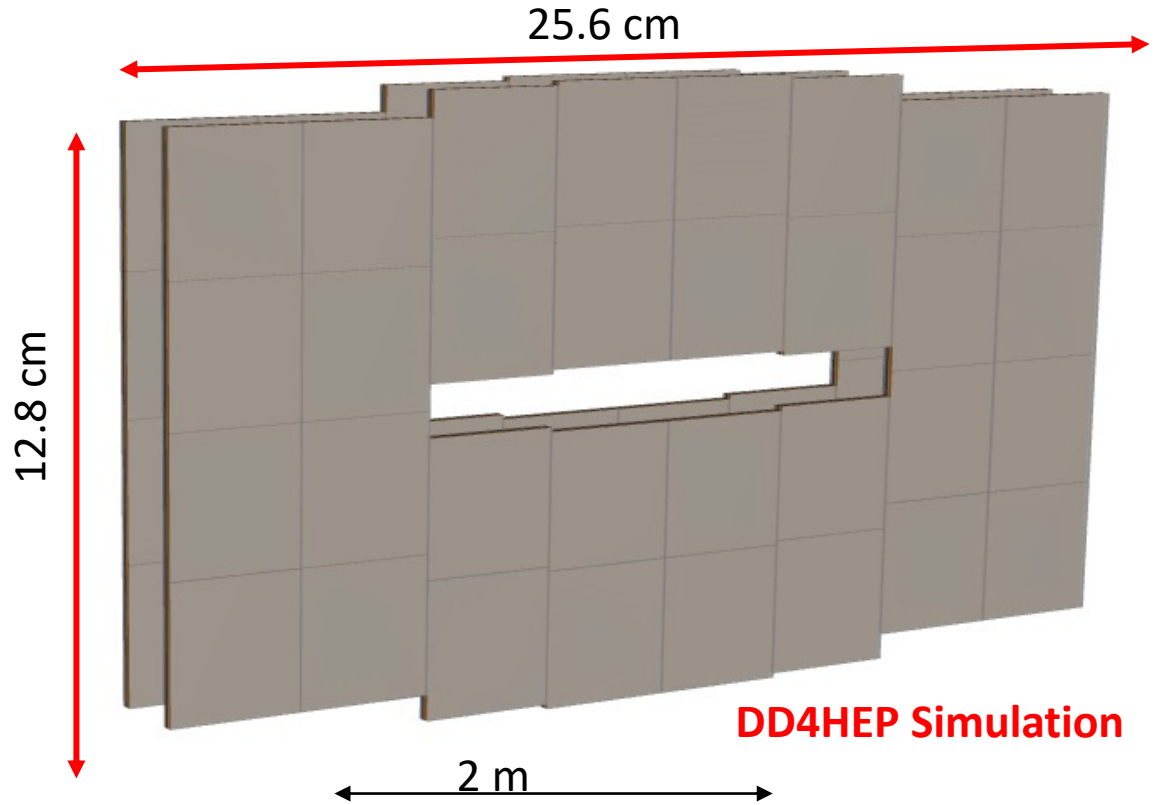

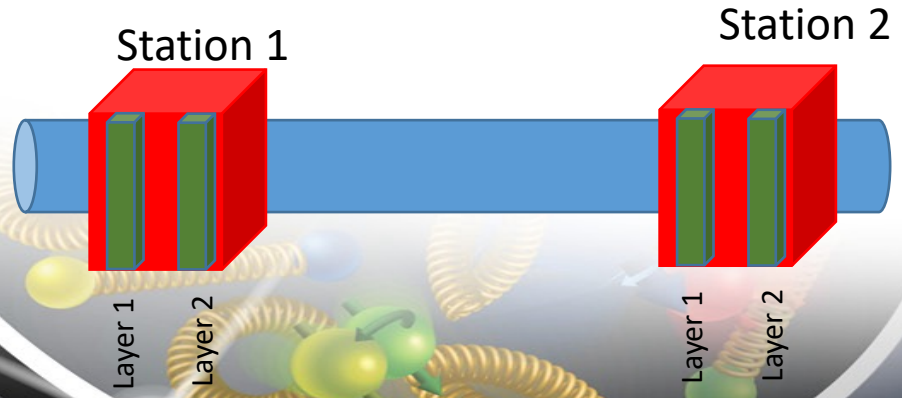

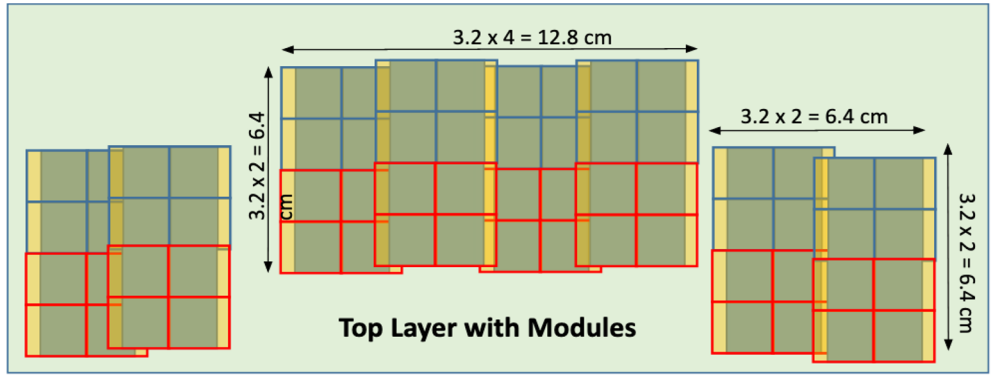

- **Technology**
  - 500um, pixilated AC-LGAD sensor provides both fine pixilation.
  - "Potless" design concept with thin RF foils surrounding detector components.

- **Status**
  - ✓ **Acceptance: 0.0* < θ < 5.0 mrad (lower bound depends on optics).**
  - ✓ **Detector directly in-vacuum a challenge for both detector and beam → impedance studies underway.**
  - ✓ **Approved generic R&D to develop more-adaptive reconstruction code!**

ML + Roman Pots: See talk by D. Ruth WG6; Tuesday @ 2pm

Off-Momentum Detectors

- **Status**
  - ✓ **Acceptance: 0.0 < θ < 5.0 mrad**
  - ✓ **Same technology as for the Roman Pots.**
  - ✓ **Even more-challenging reconstruction with off-momentum particles → extreme orbit path in the magnets.**

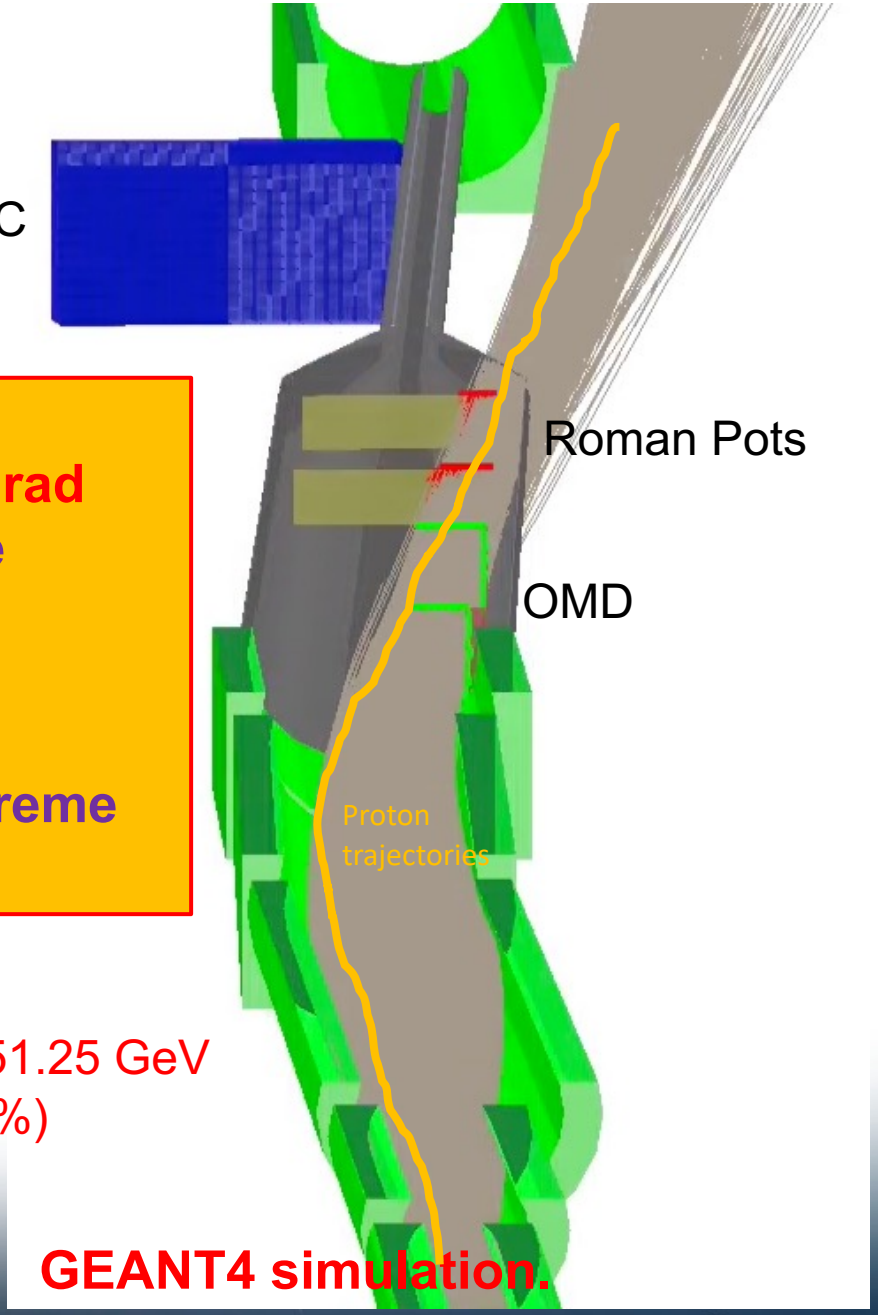

Off-momentum detectors implemented as horizontal ”Roman Pots” style sensors.

Protons
123.75 < E < 151.25 GeV
(45% < xL < 55%)
0 < θ < 5 mrad

GEANT4 simulation.

Roman Pots and Off-Momentum Detectors

Initial step file inspired by STAR

Updated model in NX with different beamtube size

Credit: Ron Lassiter

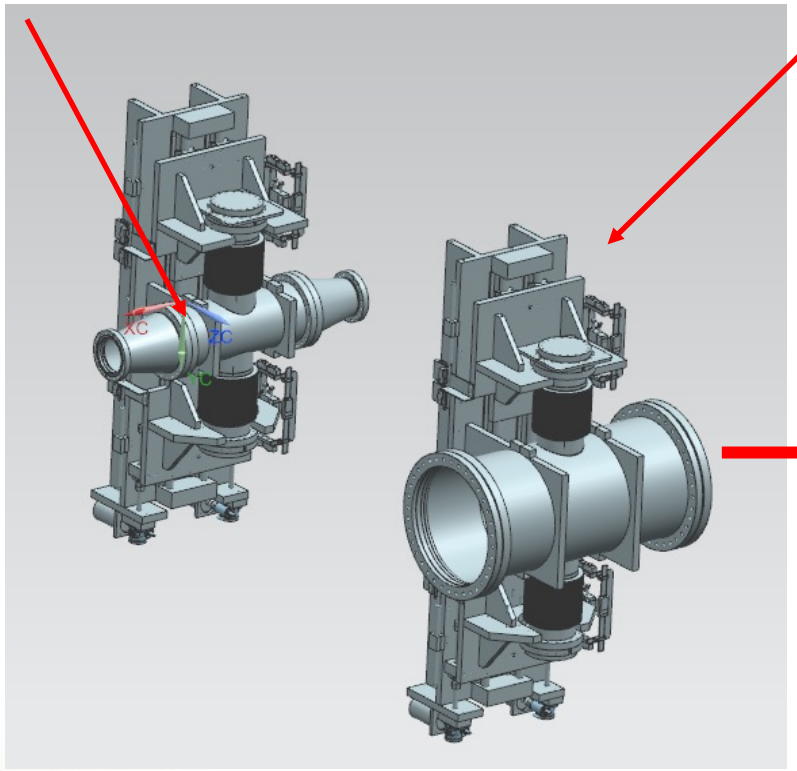

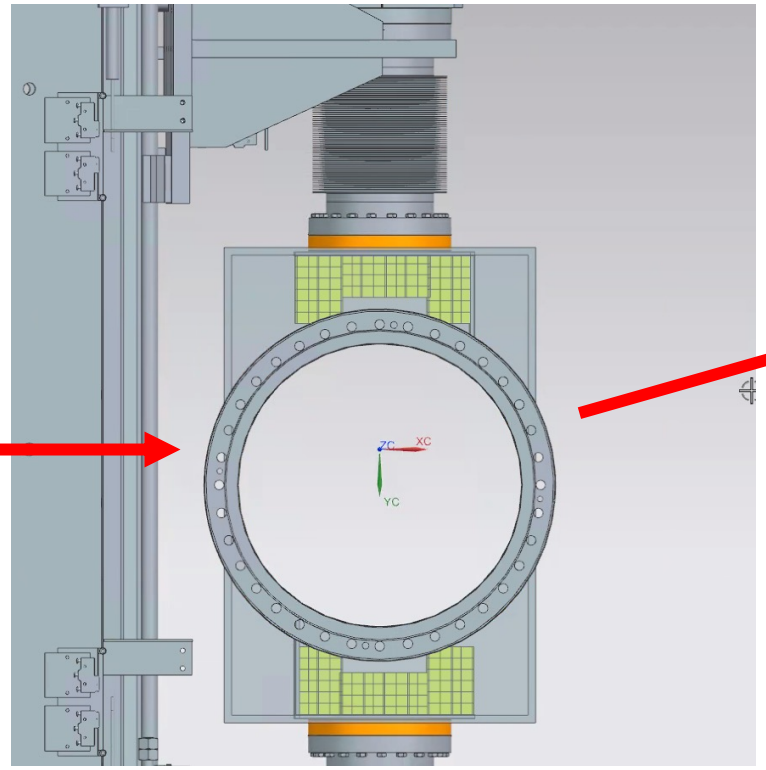

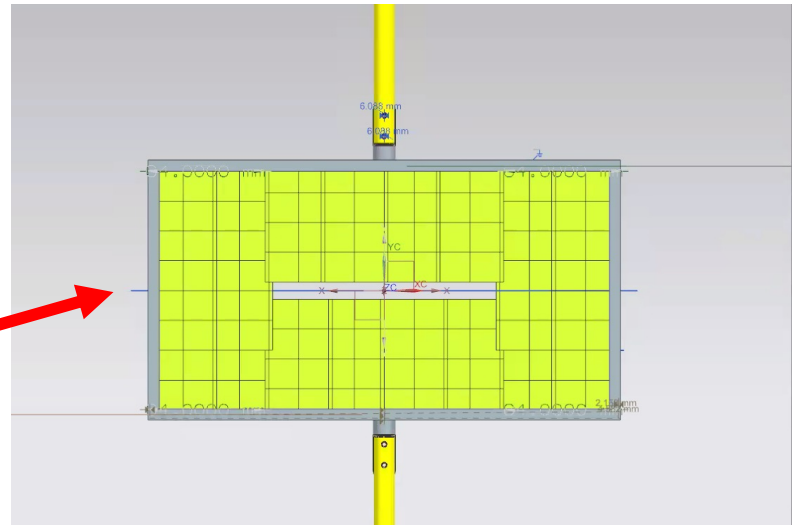

Roman Pots and Off-Momentum Detectors

Initial step file inspired by STAR

Updated model in NX with different beamtube size

Credit: Ron Lassiter

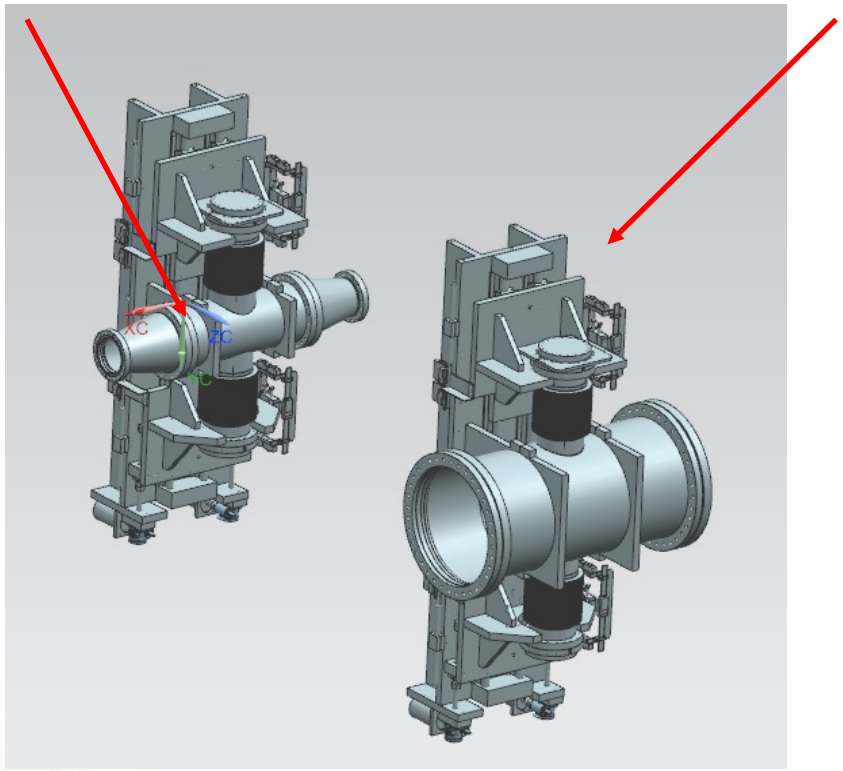

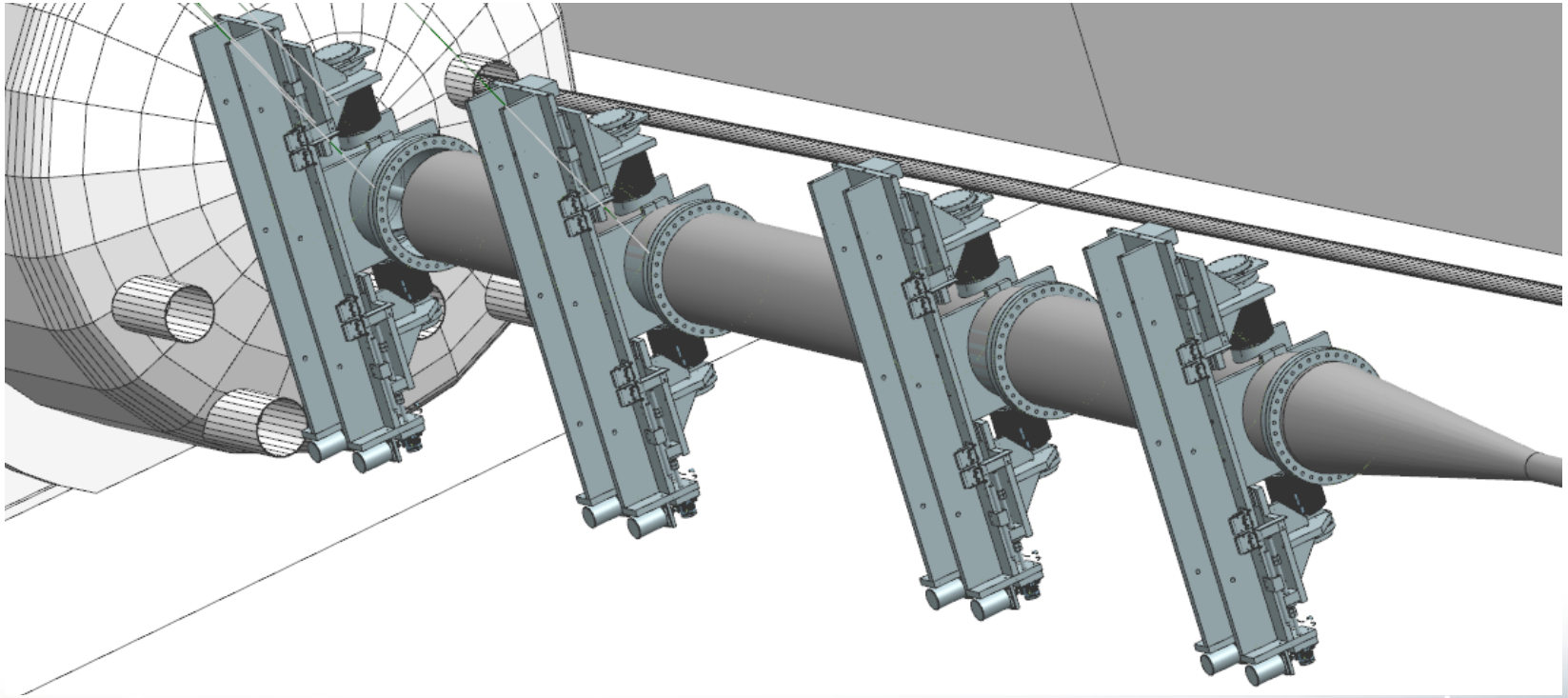

Summary of Detector Performance (Trackers)

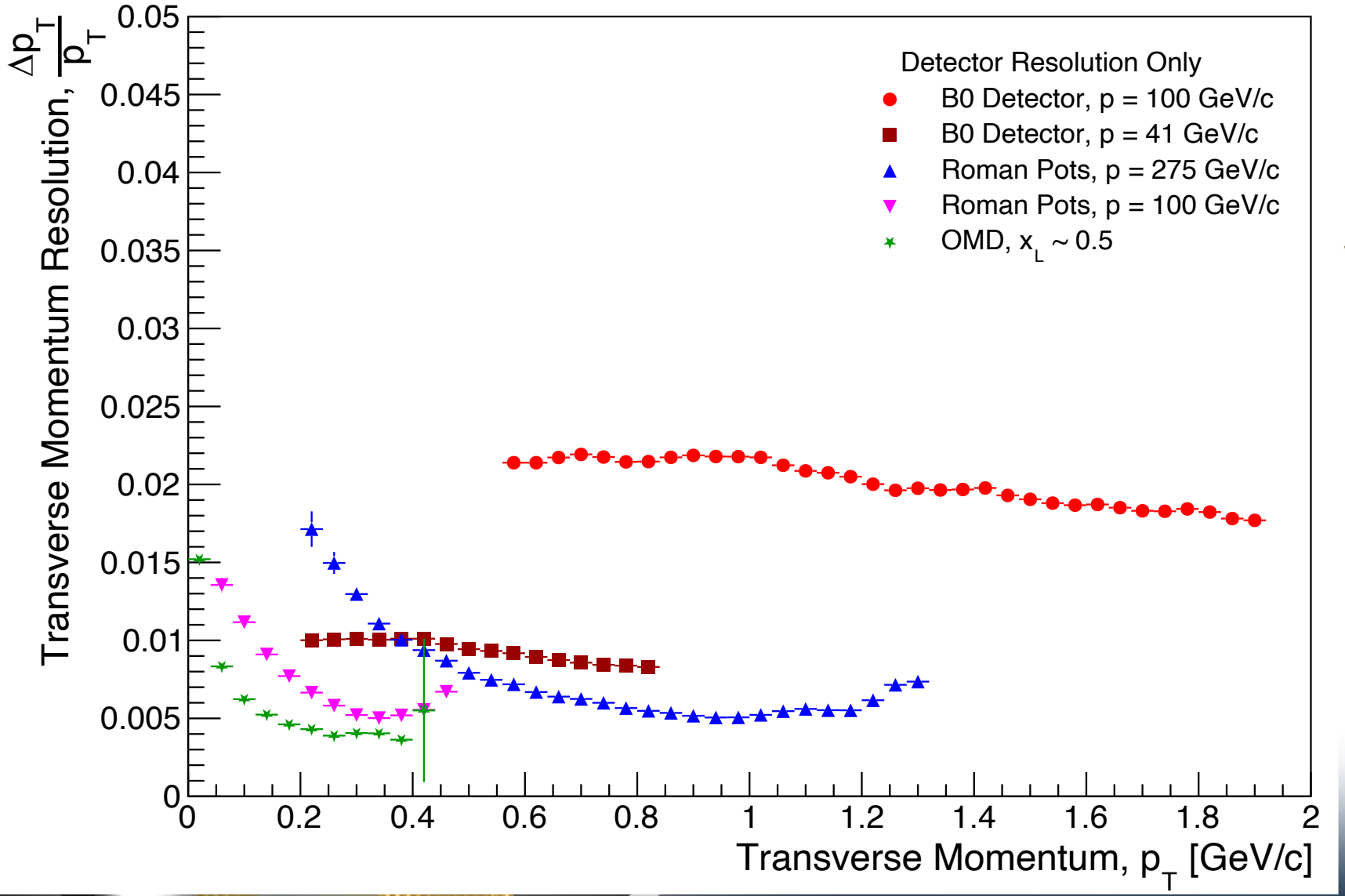

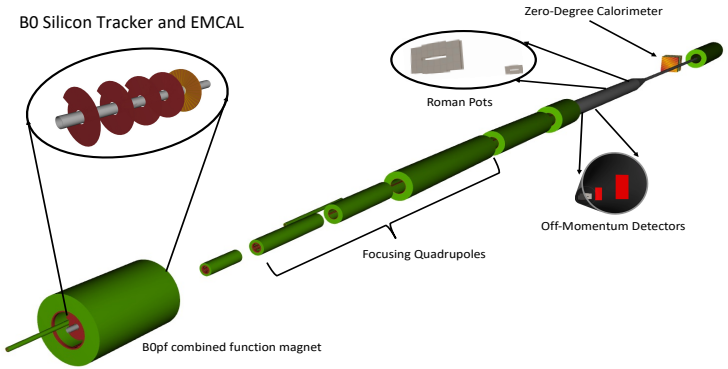

- Includes realistic considerations for pixel sizes and materials
  - Work needed on support structure.
- Roman Pots/OMDs suffer from additional smearing due to improper transfer matrix reconstruction.

ML + Roman Pots: See talk by D. Ruth WG6; Tuesday @ 2pm

Summary of Detector Performance (Trackers)

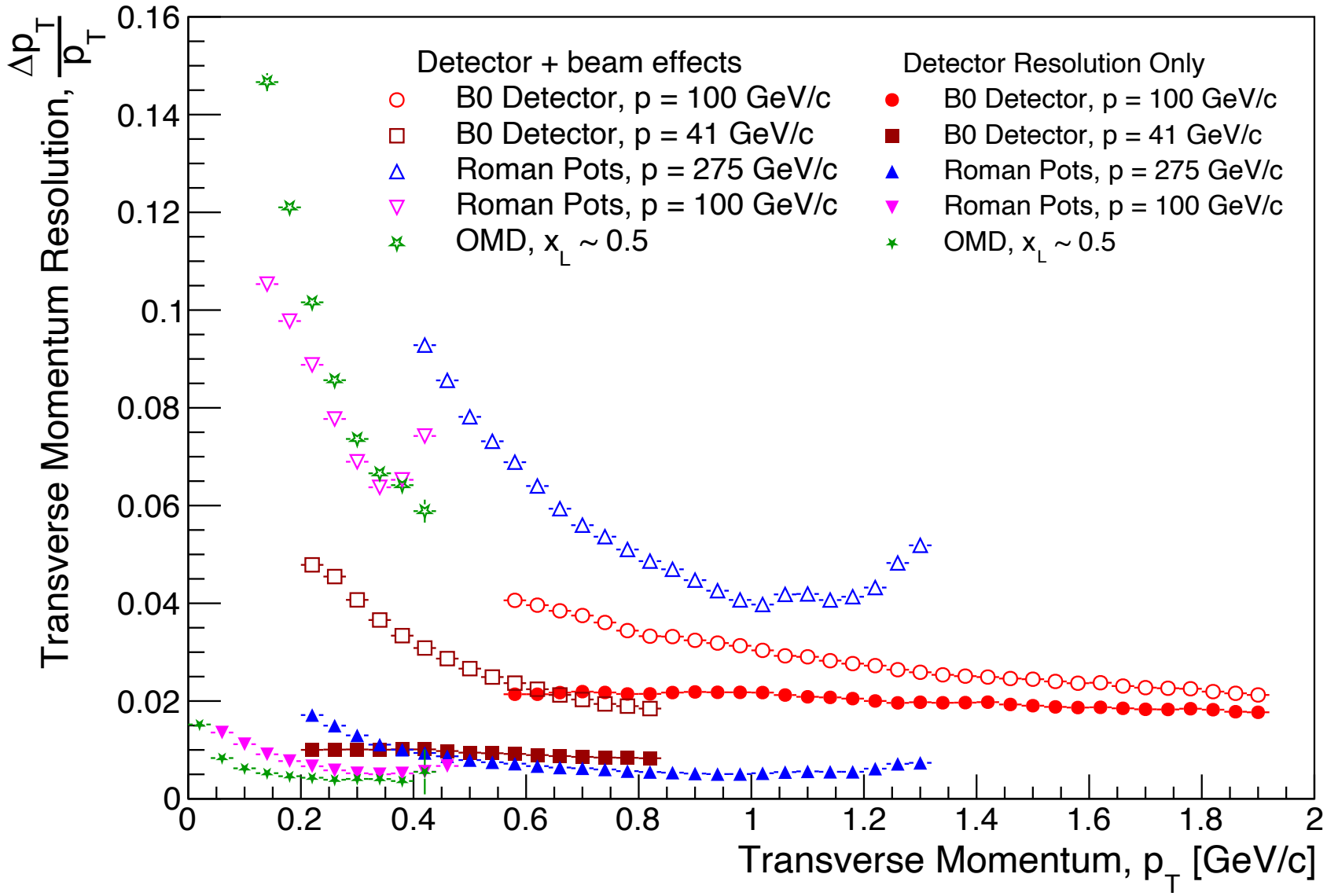

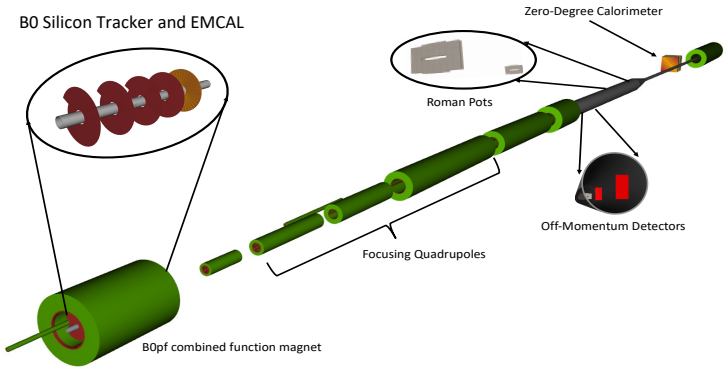

- All beam effects included!
  - Angular divergence.
  - Crossing angle.
  - Crab rotation/vertex smearing.

Beam effects the dominant source of momentum smearing!

Zero-Degree Calorimeter

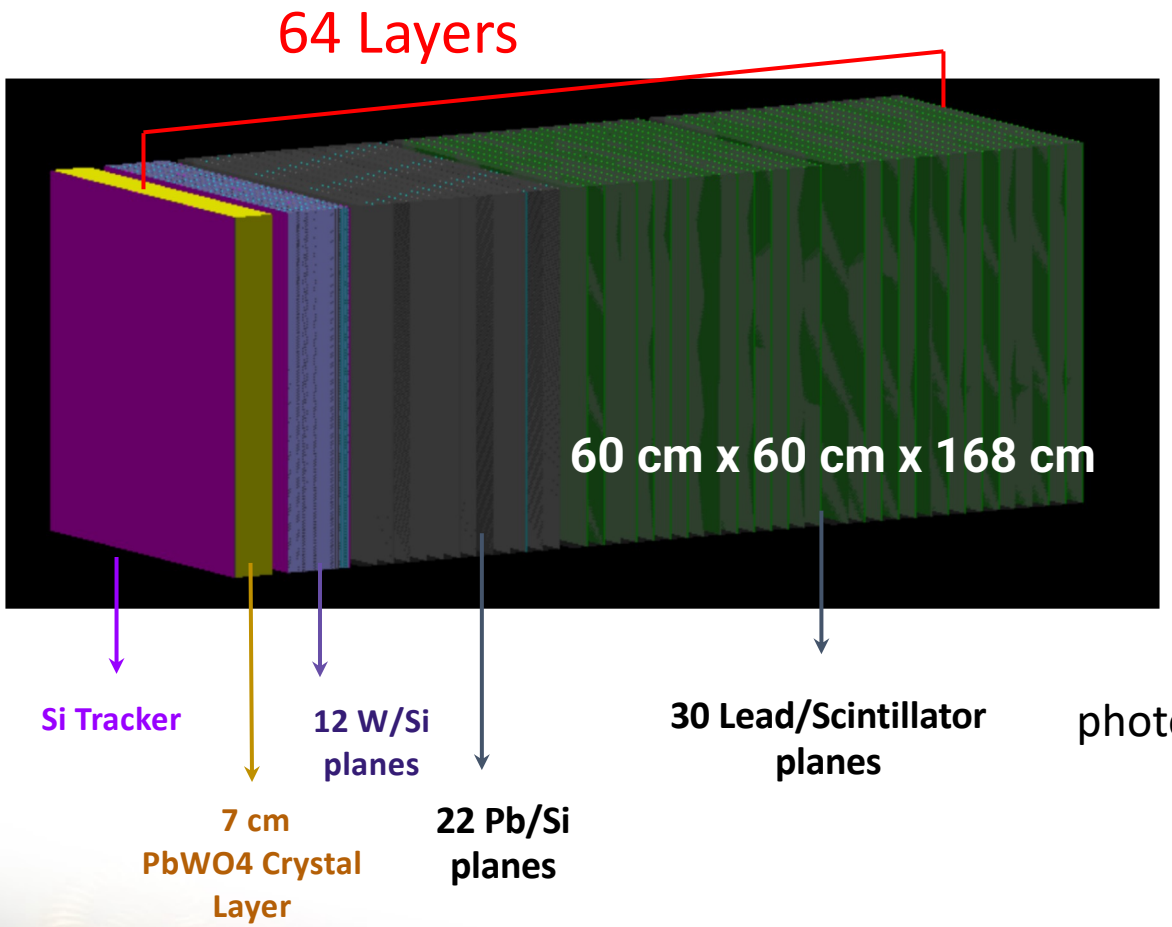

- **Status**
  - ✓ 30 m from IR
  - ✓ Detect spectator neutrons (HCAL) & photons (EMCAL)
  - ✓ Acceptance: +4.5 mrad, -5.5mrad (aperture limits)
  - ✓ Position resolution ~1.3mm at 40 GeV
  - ✓ Meets requirements from Yellow Report.
  - ✓ Lots of work to do on shower reconstruction with imaging layers.

photon

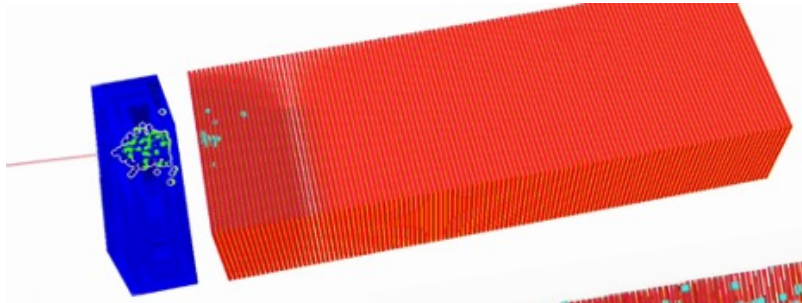

neutron

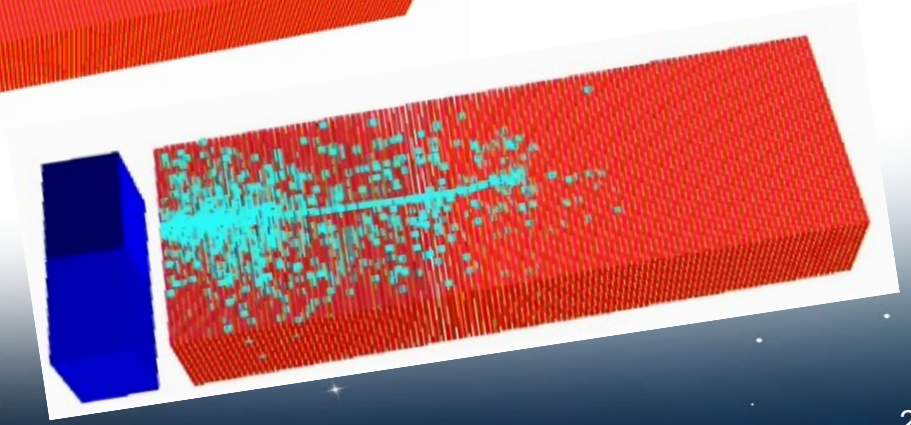

Zero-Degree Calorimeter

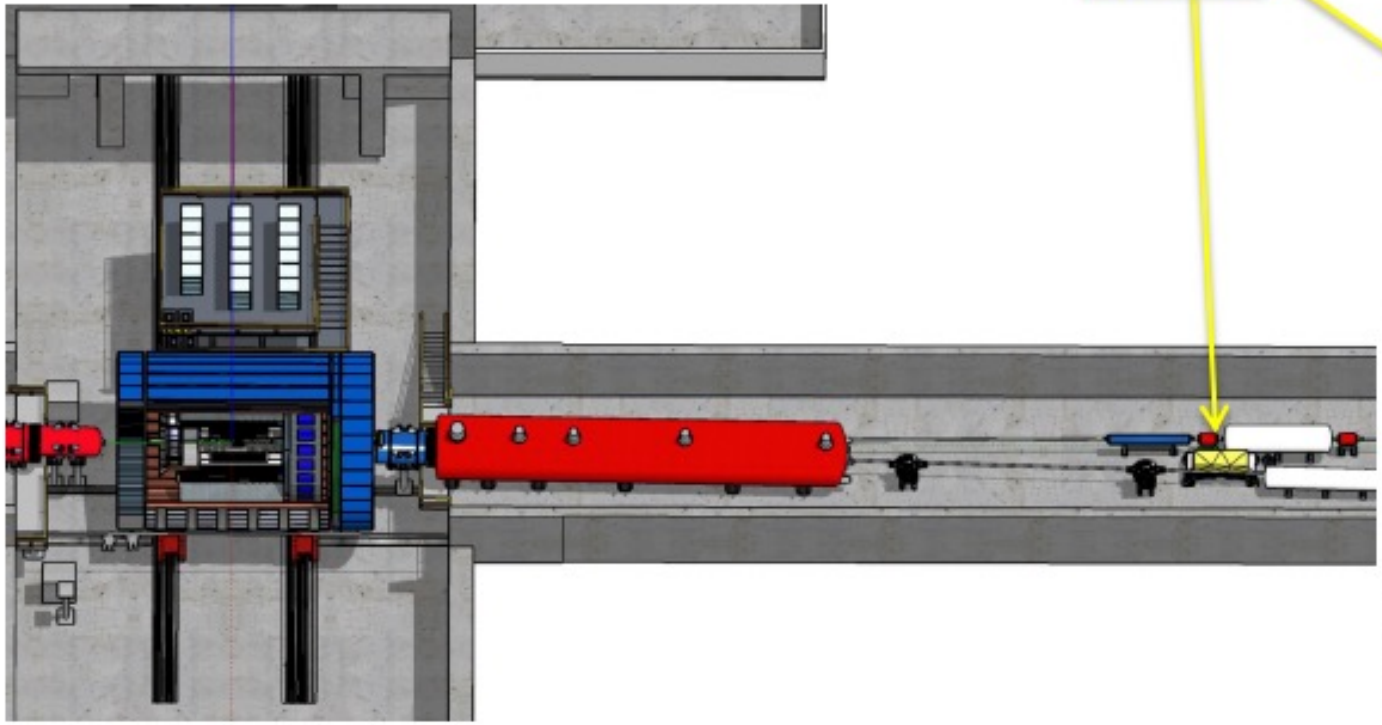

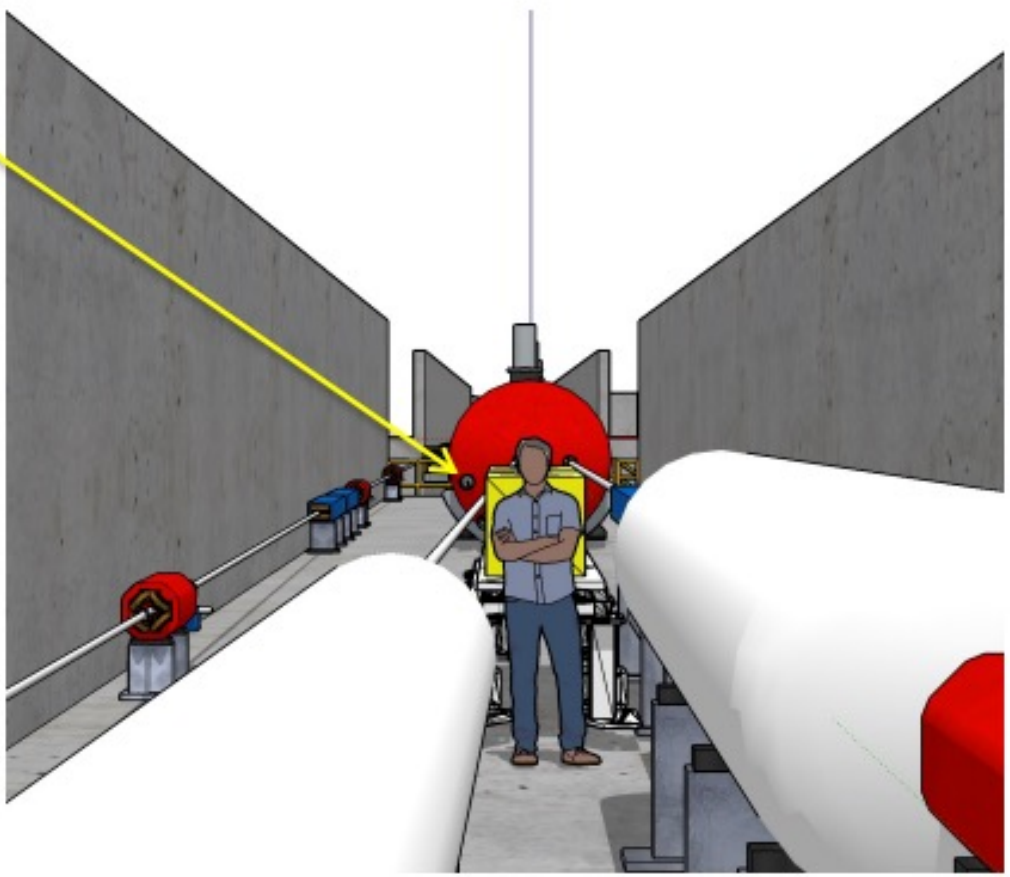

Zero-Degree Calorimeter

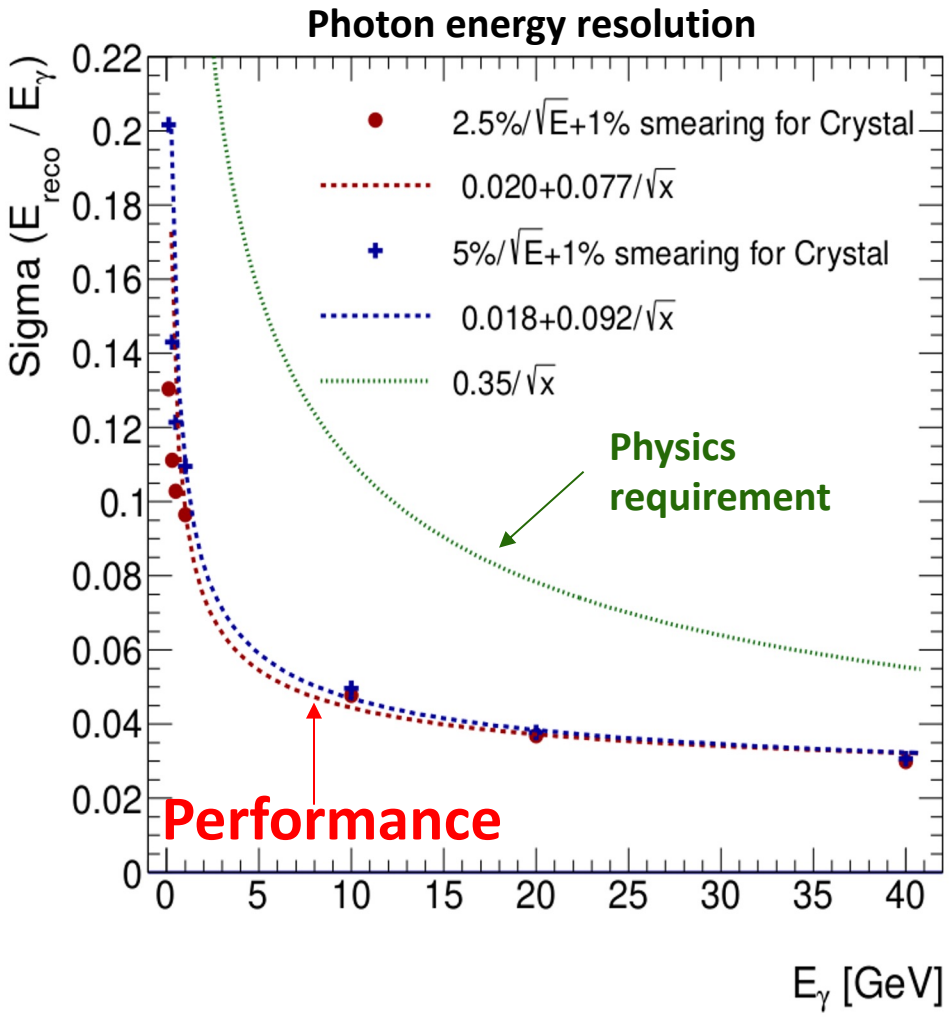

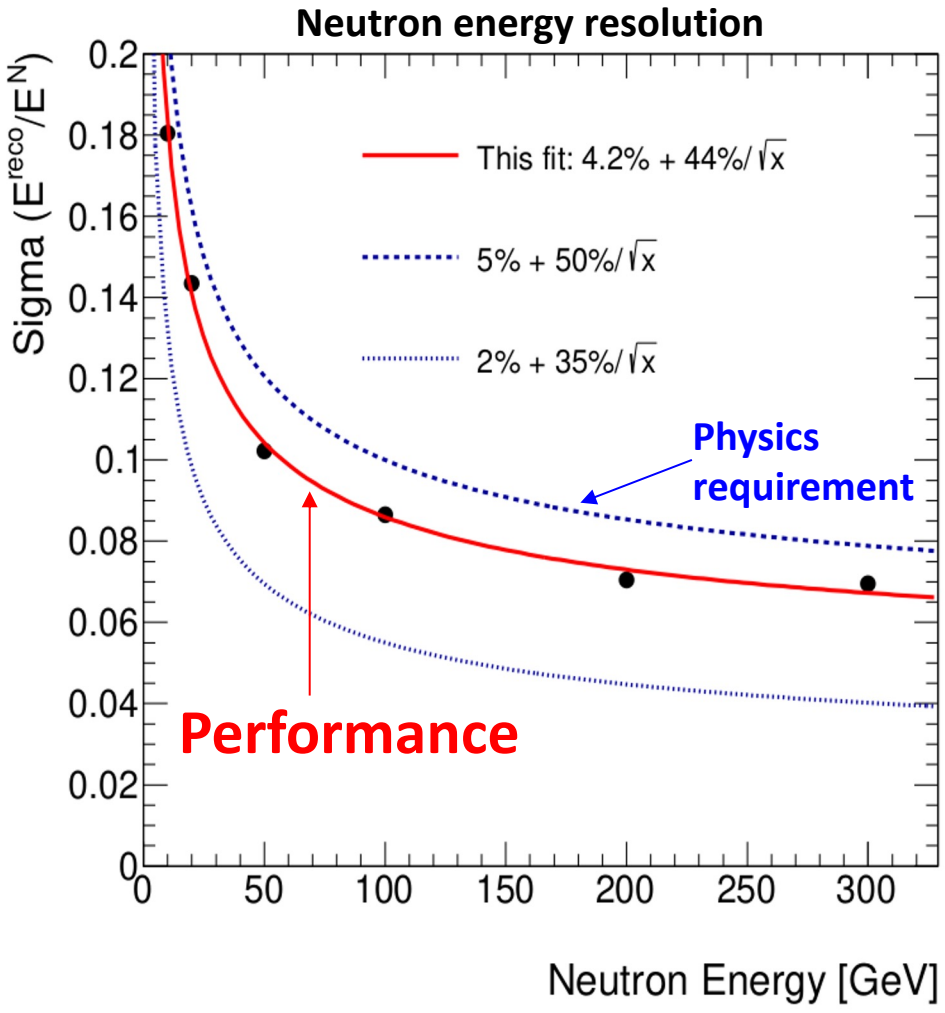

- Meets basic physics requirements from the Yellow Report.
- Optimization work needed on imaging system.

Credit to Shima Shimizu (JSPS/RIKEN)

Summary and Takeaways

- Far-forward physics characterized by exclusive+diffractive final states.
  - Lots to unpack! – proton spin, neutron structure, saturation, partonic imaging, meson structure, etc.
- There is lots of interest in the EIC community in studying this physics via these final states!
  - Exciting time to get involved → Need the detectors and software to do any physics!

Email me if you have any questions: ajentsch@bnl.gov

Want to get involved?? Join our meetings and learn how!

Meeting time: Tuesdays @ 9am EDT (bi-weekly, or weekly, as needed)
Indico: https://indico.bnl.gov/category/407/
Wiki: https://wiki.bnl.gov/eic-project-detector/index.php?title=Collaboration
Email-list: eic-projdet-FarForw-l@lists.bnl.gov
Subscribe to mailing list through: https://lists.bnl.gov/mailman/listinfo/eic-projdet-farforw-l