Implementation and performance of the Detector Control System for the CMS ECAL

P. Adzic[1], A. Brett[2], D. Di Calafiori[3], F. Cavallari[4], G. Dissertori[2], R. Gomez-Reino[5], A. Inyakin[6], D. Jovanovic[7,1], G. Leshev[2], P. Milenovic[2,1], R. Ofierzynski[5], T. Punz[2], J. Puzovic[7,1], S. Zelepoukine[8,2]

Design issues of CMS ECAL detector

Description of Detector Control System for the ECAL

Specifications of the ECAL DCS subsystems

Test results and performance of DCS subsystems

1) VINCA Institute for Nuclear Sciences, Belgrade, Serbia
2) Institute for Particle Physics, ETH Zürich, Switzerland
3) CEFET/RJ, Rio de Janeiro, Brasil
4) INFN Rome, Italy
5) CERN, Geneva, Switzerland
6) University of Minnesota, USA
7) Faculty of Physics, University of Belgrade, Serbia
8) IHEP, Protvino, Russia

ECAL design criteria

Physics goal - The discovery of the Higgs at the LHC

Preferable channel for low mass Higgs search (m_H<130 GeV): $H \rightarrow \gamma\gamma$

Detector design criteria:

- **High energy and mass resolution**
- **High degree of hermeticity and granularity**
- **Compact,** operated in magnetic field of 4T
- **Radiation tolerance** to appropriate radiation doses
  - Neutron fluence up to 5×10^{14} cm^{-2}, integrated dose up to 50 kGy
- **Fast response time** for 40 MHz bunch crossing rate.

Crystals – $PbWO_4$

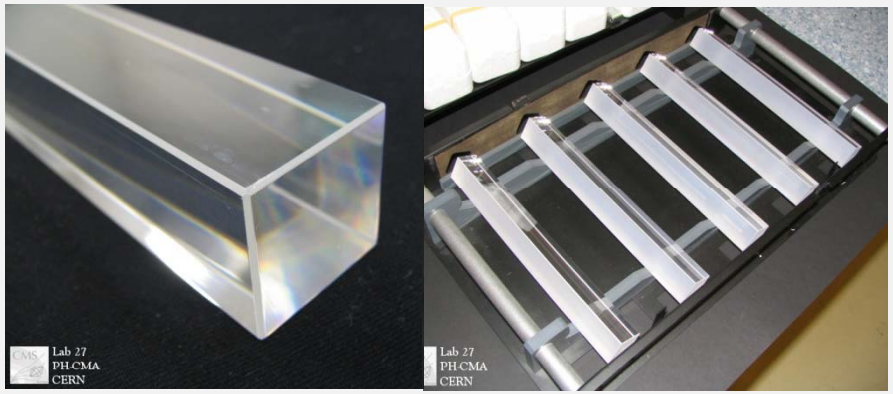

Temperature sensitivity: -2.2% / ^{O}C

Photo-detectors – APD and VPT

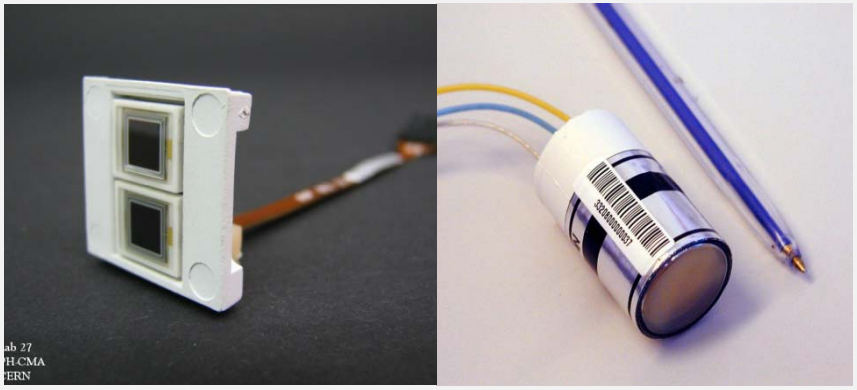

Temperature sensitivity: -2.3% / ^{O}C

Temperature Stability Issue

One of main ECAL design challenges:

Stabilization of crystal volume temperature to 0.05 ^{o}C

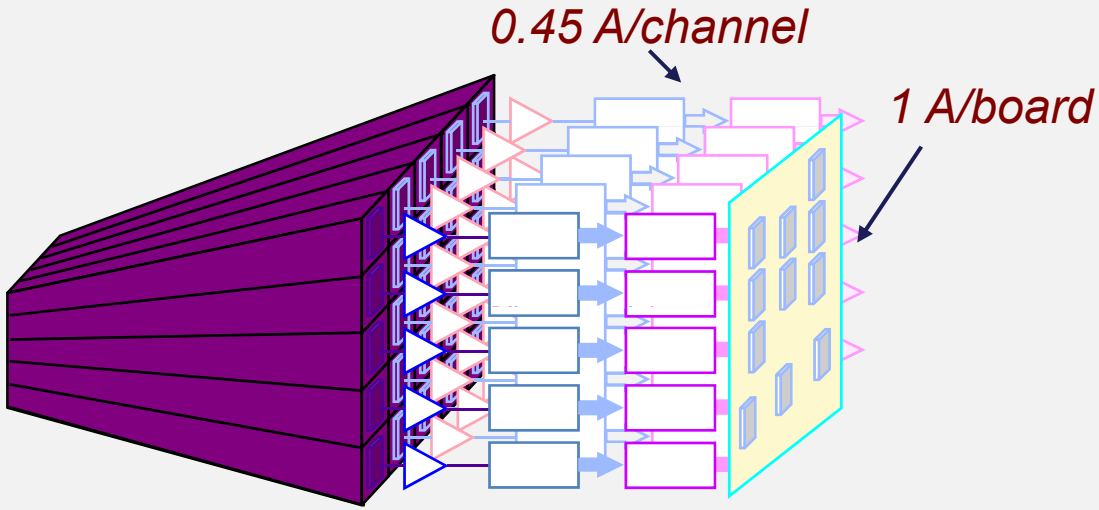

Total heat power dissipated in the whole calorimeter ~300 kW

Efficient removal of all excess heat is critical for the stable operation of the detector.

Systems of crucial importance for the ECAL:
Cooling system & Detector Control System

ECAL Detector Control System

Main design objectives and functionalities:

- Monitoring of the crystal and APD temperature stability(18.00^{o}C 0.05^{o}C), as well as humidity level inside the ECAL,
- Monitoring of ECAL electronics environment temperature and water-leakage sensors,
- Automatic ECAL protection in case of problematic situations (hardwired interlocks, predefined control actions etc.),
- Software control of parameterization and functioning of ECAL sub-systems (HV, LV, Cooling, ESS, PTM/HM, Laser monitoring, DCUs etc.).

Hardware (autonomous) subsystems of the DCS:

- System for Precise Temperature Monitoring (PTM)
- System for Humidity Monitoring (HM)
- ECAL Safety System (ESS)

ECAL DCS layout

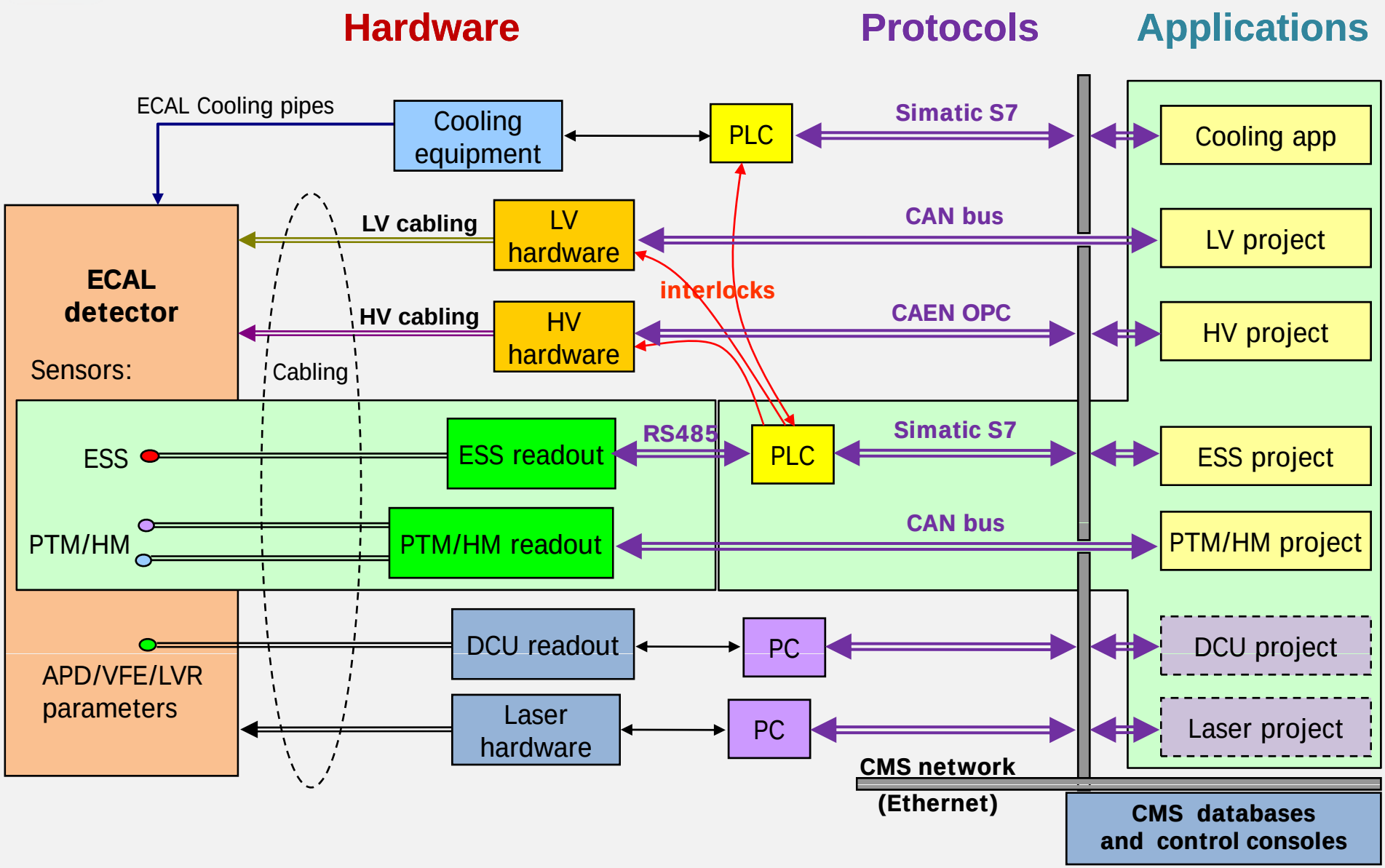

Precision temperature and humidity monitoring

Functionality:

- Monitoring of **temperature and relative humidity** inside the ECAL detector; Data visualization and recording to CMS Conditions DB.
- Abnormal situation processing (**over-temperature, high humidity**); warnings/alarms to ECAL Supervisor to shutdown LV/HV.

Sensors (tested for radiation / magnetic field tolerance):

- 360 + 80 temperature probes (EB + EE); pre-calibrated by manufacturer; **Relative precision better than 0.01^{o}C.**
- 144 + 32 RH probes (EB + EE); **Precision 5 %RH in range [20 – 90 %RH].**

Readout:

- **Separated from ECAL DAQ** (non-stop operation, incl. CMS shutdown).
- **Based on ELMB module** developed in ATLAS (16-bit ADC / 64 ch. MUX).
- No electronics inside CMS (accessible during CMS shutdowns).

PTM/HM layout

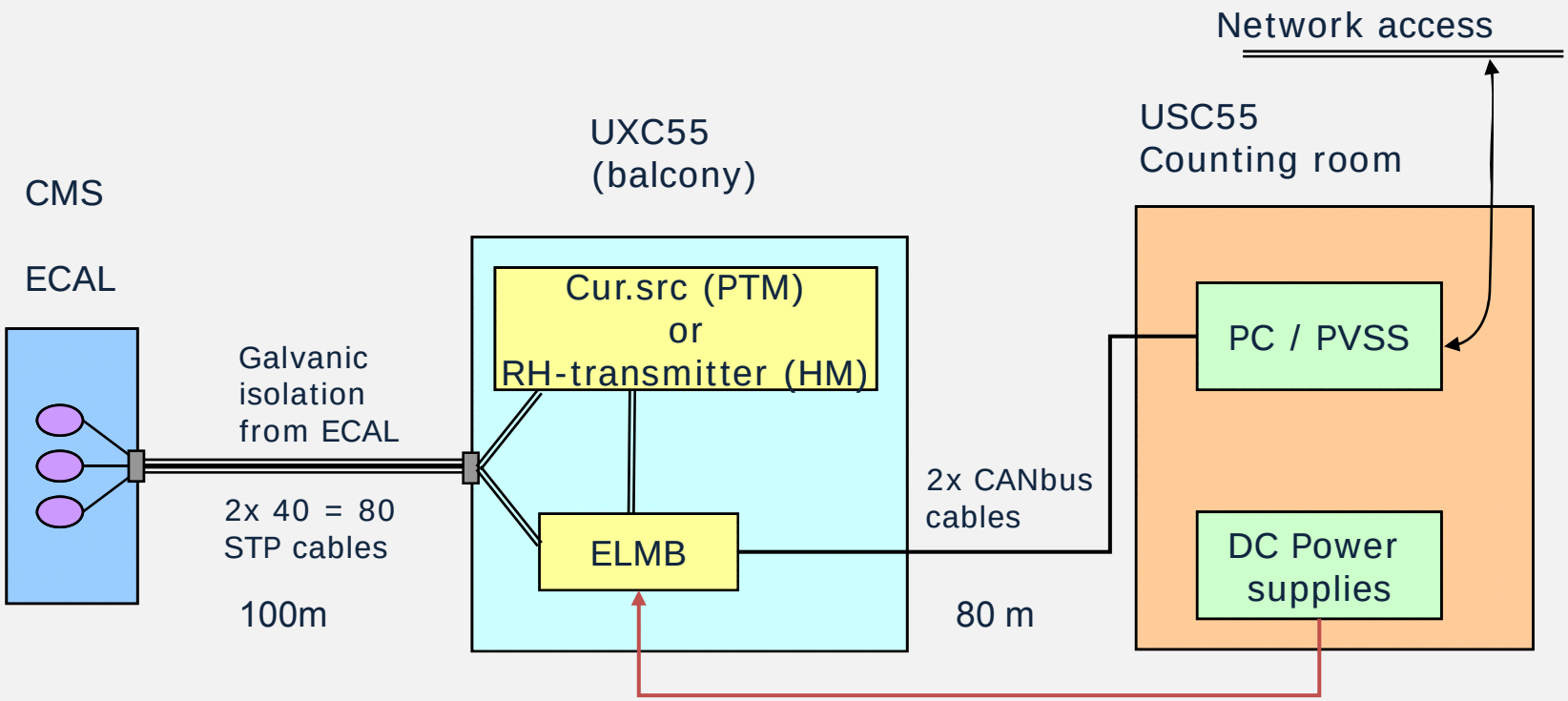

Sensors

PTM: 440
HM: 176

Readout

24x ELMBs
512 PTM channels
192 HM channels

Data collection and processing

PTM – readout stability

PTM readout stability monitoring (by measuring a 100K 0.6 ppm/°C reference resistor)

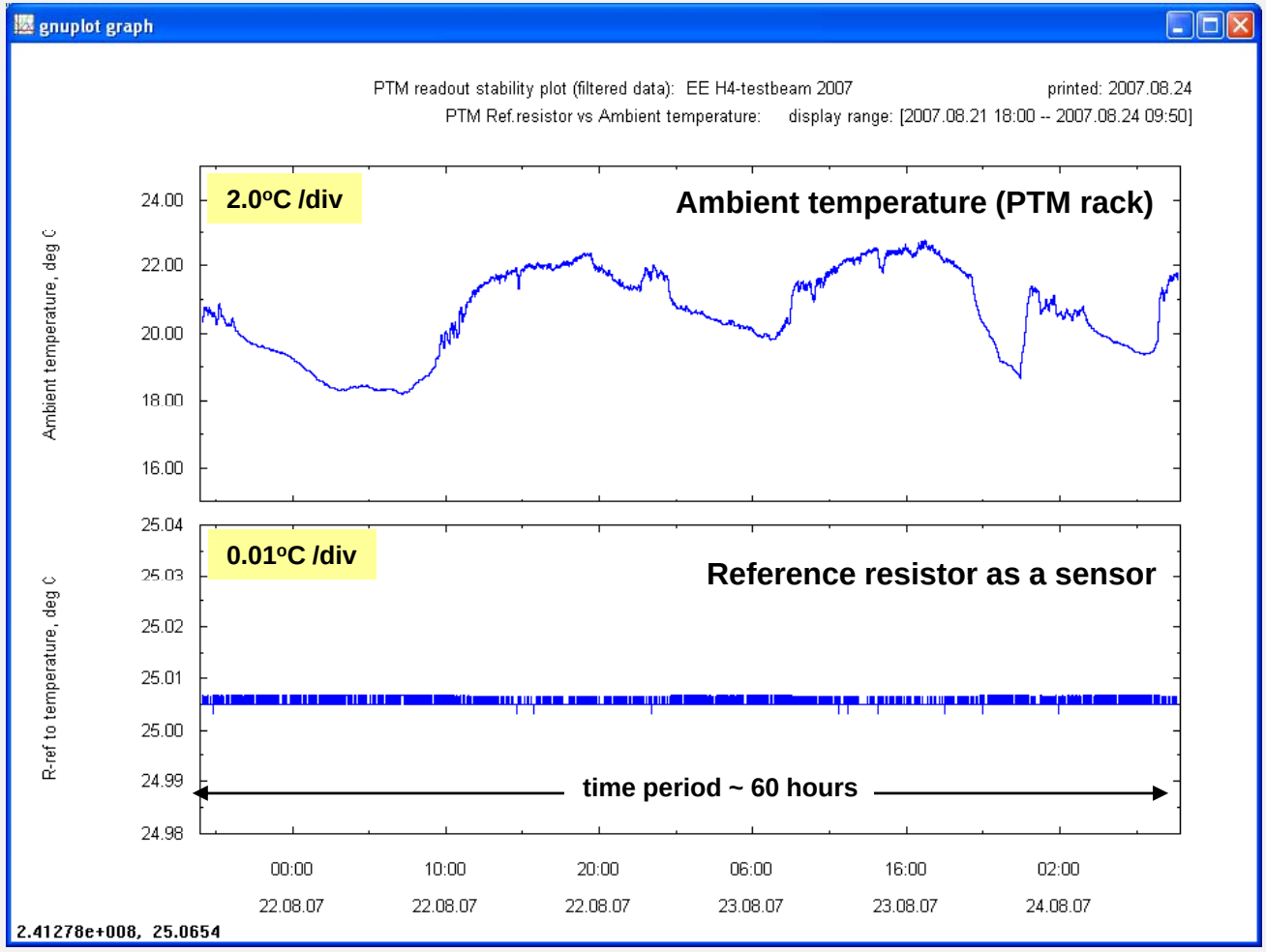

H4 testbeam
(August 2007)

PTM readout stability is better than 0.001°C

PTM resolution is ~ 0.0008°C

PTM – readout chain noise

Noise in the PTM readout chain

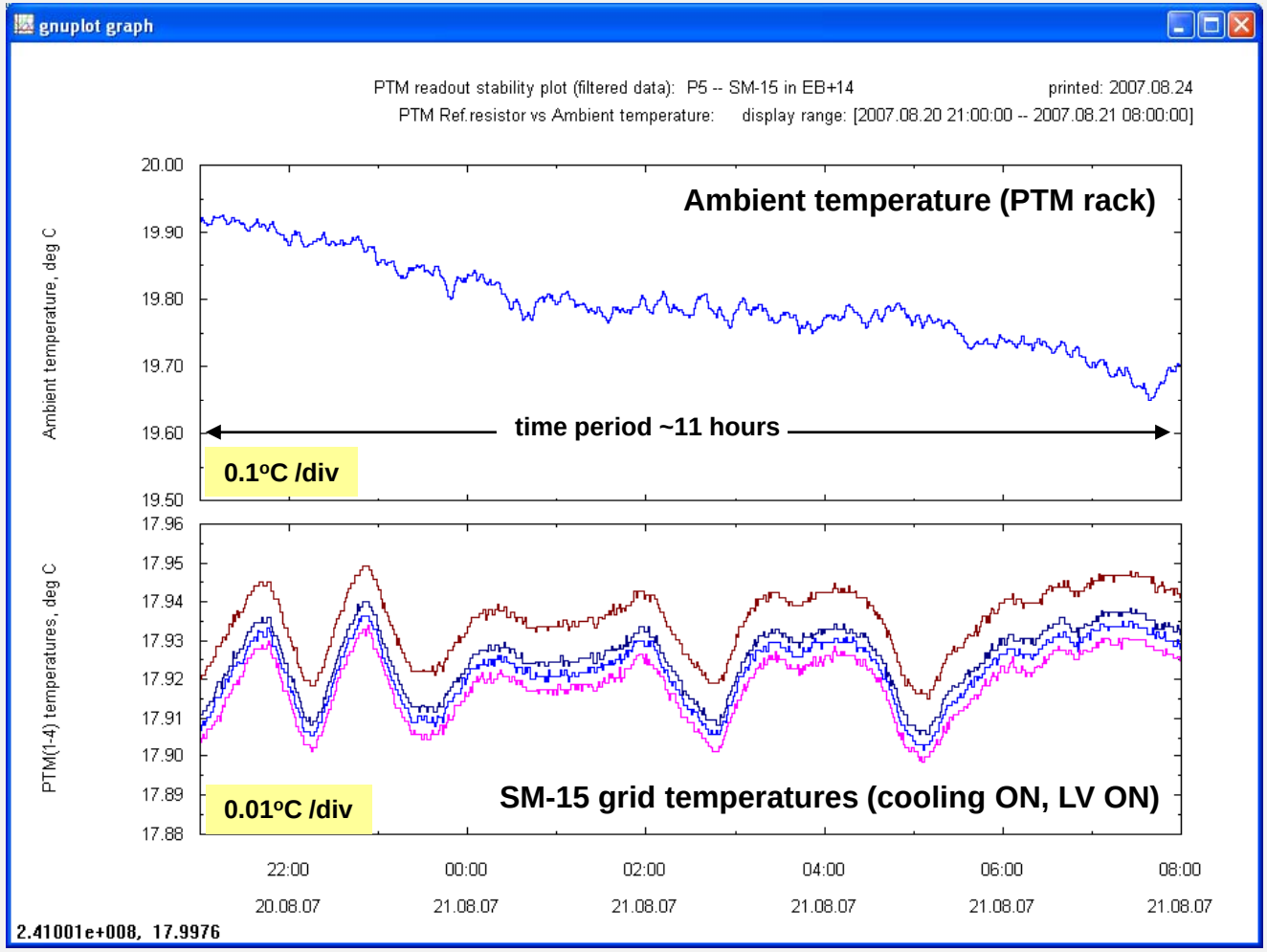

CMS (August 2007)
EB+14 / SM-15

Noise is negligible:
at the level of resolution = ~ 0.001°C

~0.05°C oscillations are from Cooling system regulation feedback loop not yet finally adjusted

ECAL Safety System (ESS)

- Full **autonomy of the system** in every aspect and functionality;
- Independent and reliable temperature monitoring of ECAL FE electronics; **Precision: 0.1 ^{o}C**
- Detection of water leakage (WLD) inside the ECAL;
- **Reliable hardware interlocks** and software signals to
  1. **HV system crates** (hardware interlock signals),
  2. **LV system crates** (hardware interlock and “power cut” signals),
  3. **Cooling system** (water flow and temp., PLC watchdog, WLD actions);
  4. operator and system experts (PVSS alerts, SMS and Email alerts etc.);
- **Radiation tolerance** in accordance with CMS radiation dose specifications;
- Maximum level of **robustness, reliability and maintainability**;

Implementation of the ESS

Three interconnected system layers:

- **ESS Front-End layer** – signal conversion, channel multiplexing,
- **ESS PLC layer** – data acquisition and processing, control signal generation, external interfaces to other systems (LV, HV, Cooling etc.)
- **ESS software layer** – monitoring and software control of the system.

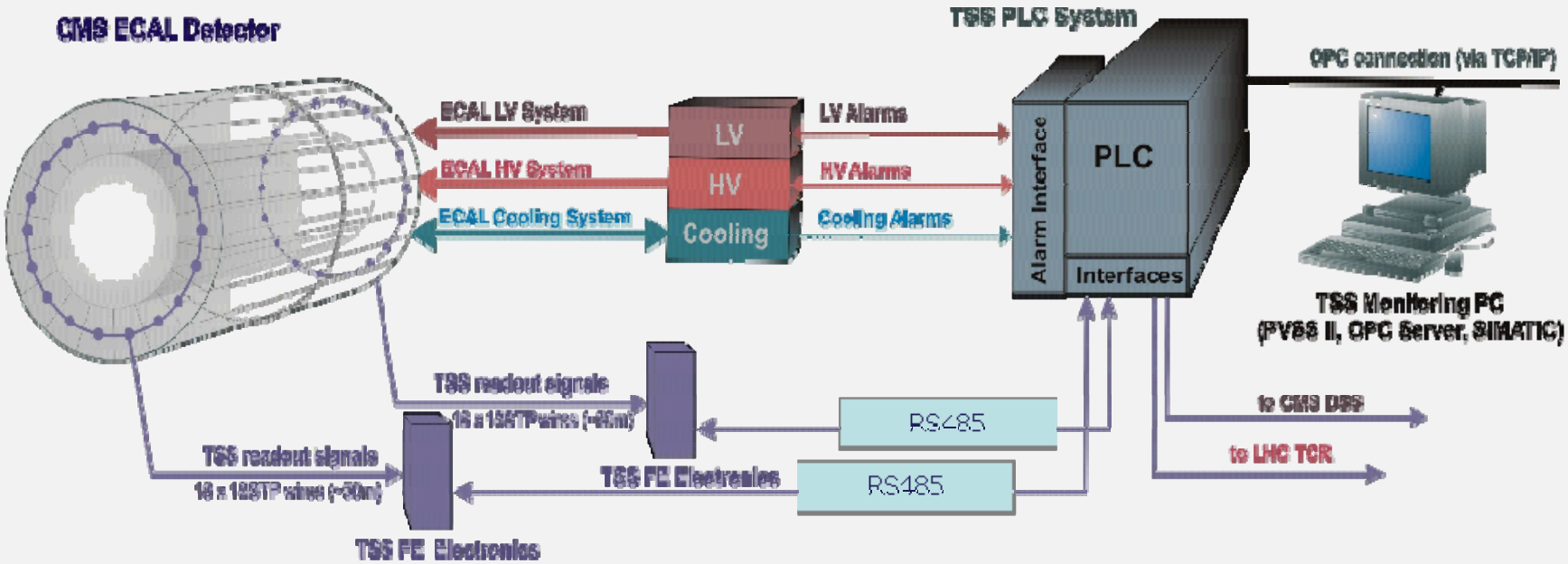

FE components of the ESS

ESS Temperature sensors:

- 288 + 64 SMD, 470 Ω NTC thermistors
- positioned in redundant pairs
  - 8 per EB SM
  - 8 per EE quadrant
- Calibrated to absolute precision of 0.2 °C.

ESS Readout Unit:

- Multiplexing + Resistant Bridge Front-end
- Redundant temperature readout:

  1 unit - 4 Super Modules,

  12 units in total (EE+EB+EB+EE)
- Reliability analysis

ESS Water leakage detection:

- Commercial sensor by RLE Technology
- 2 wires with non-conductive coating
- 2 wires with conductive polymer coating
- Determines presence of water leakage

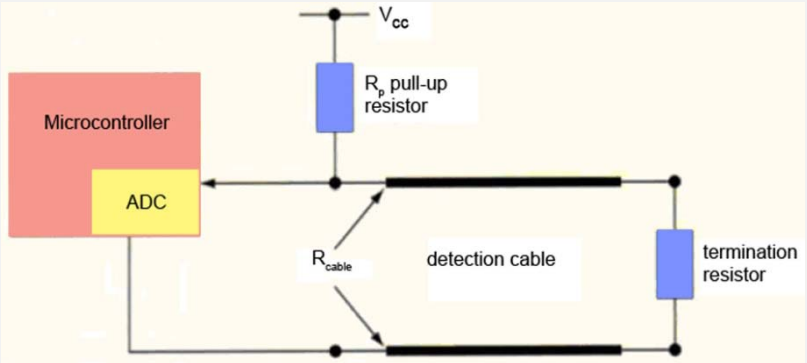

ESS PLC system

Based on industrial Siemens PLC SIMATIC S7 controllers

Subsystem S7 – 400H:

- **Redundant** information processing,
- **Redundant** communication with ESS software layer.

Subsystem S7 – 300:

- **Redundant** communication with S7-400H part of ESS PLC,
- **Redundant** RS485 communication with FE layer (via **ESS protocol**);
- external signal inputs;
- Interlock and control signal outputs.

Fault-tolerant system

for most of critical situations

Fail-secure system

for all other situations

Digital filtering

- Second order IIR NF filter (Butterworth)
- Stable, tolerant to digitalization effects and choice of initial conditions

ESS performance

Results of exposition of ESS sensors to proton irradiation (up to 200 kGy)

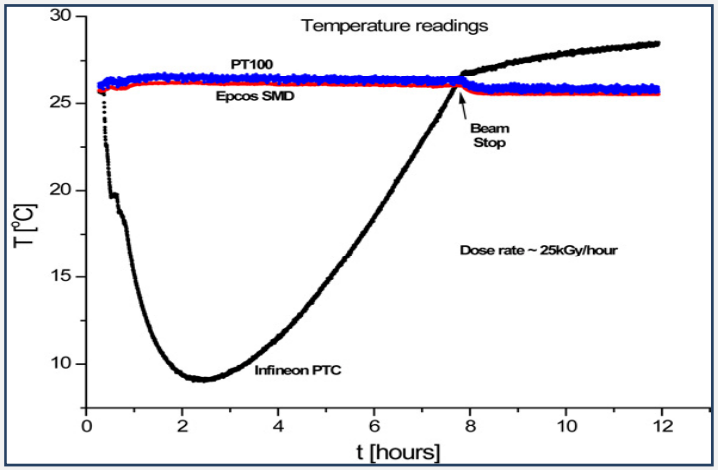

Results of exposition of ESS electronics to proton irradiation (up to 60 Gy)

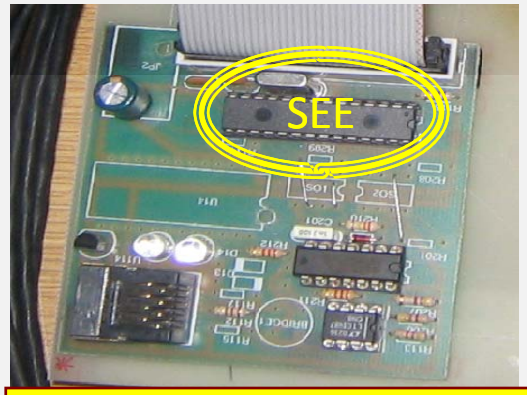

One SEE effect:

$\sigma_{SEE} = N_{SEE}/\Phi_{EKV}$

$= 5.6 \times 10^{-12}$ cm^2

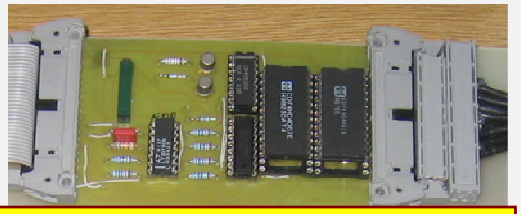

Negligible cross section for SEE!

Temperature fluctuations (noise) for SM 26

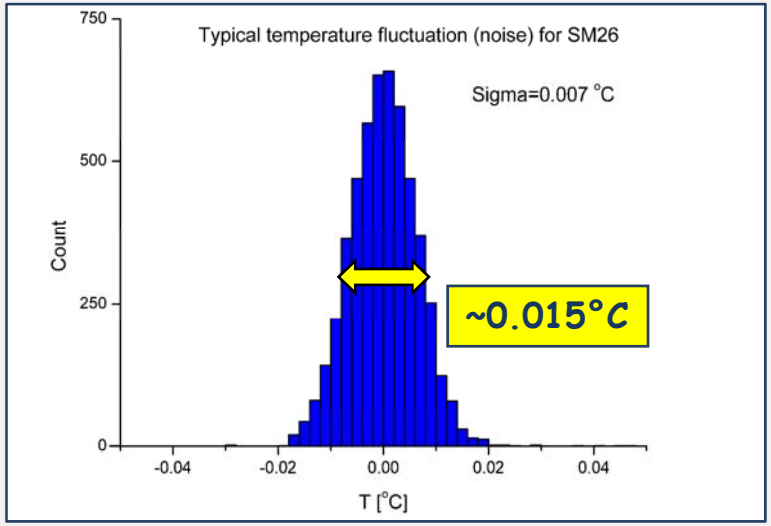

Temp. difference for redundant sensors

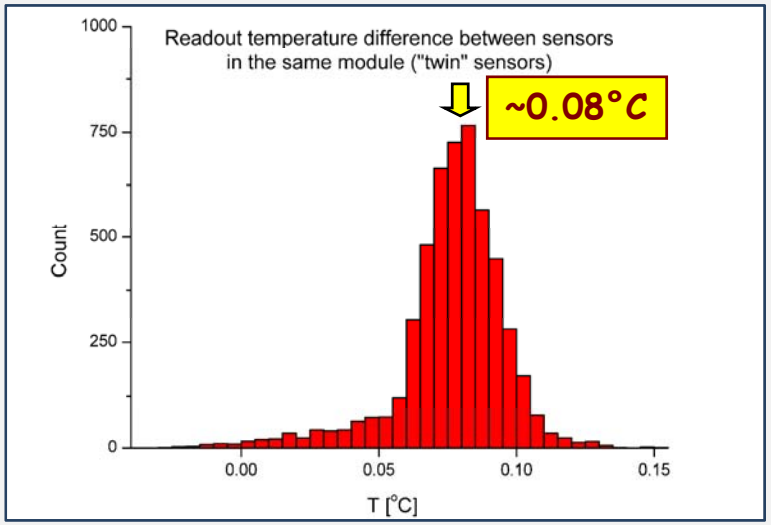

Monitoring and control software

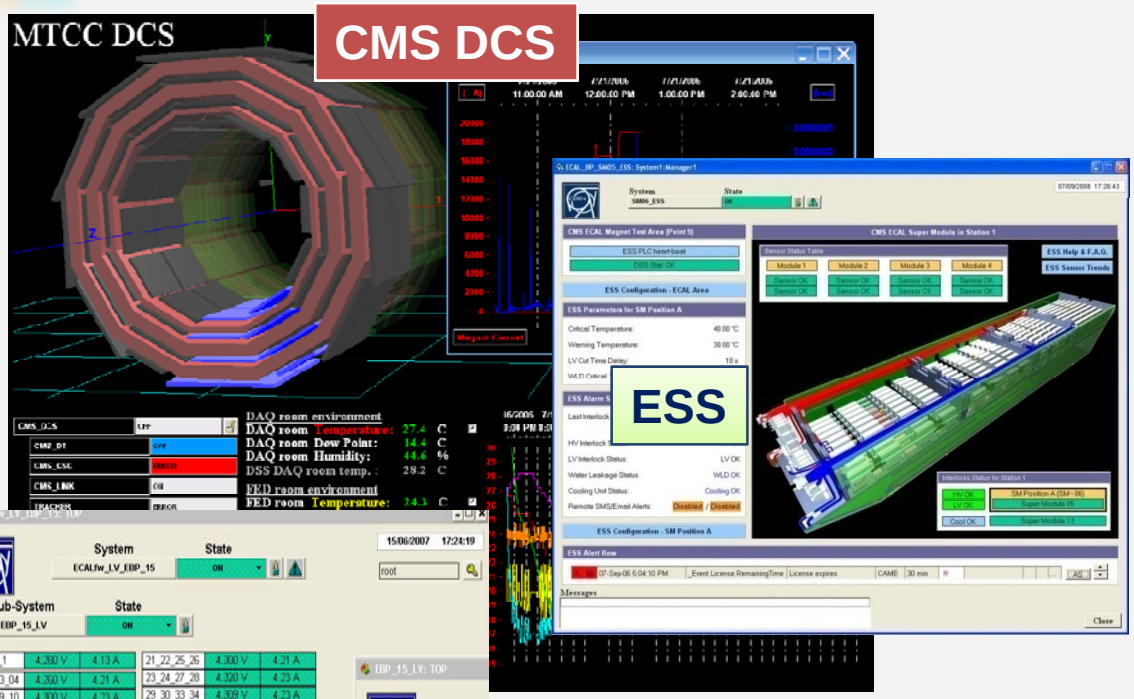

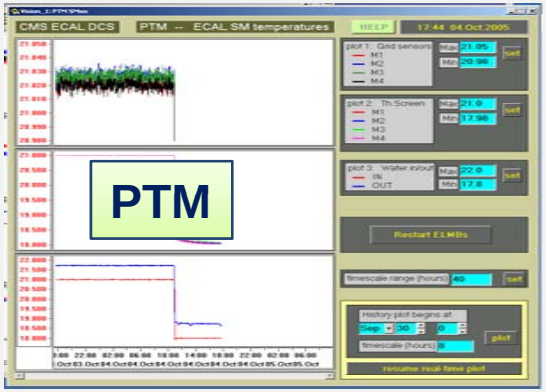

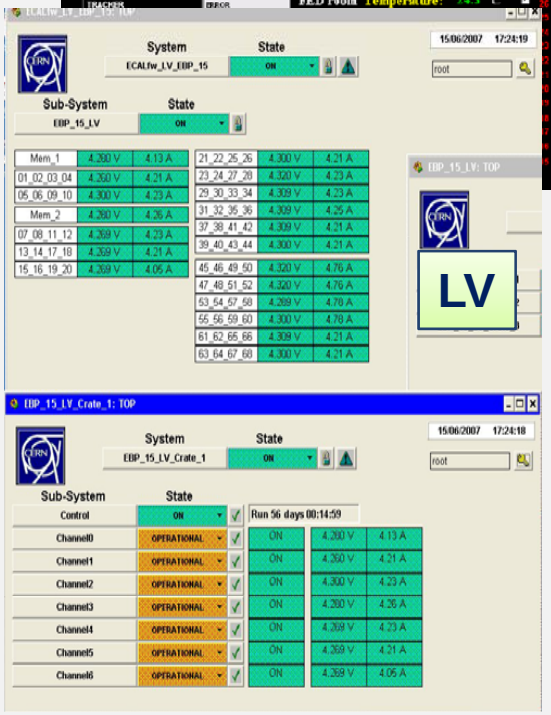

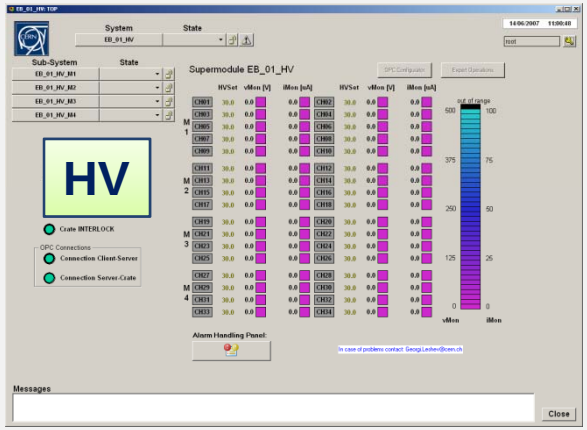

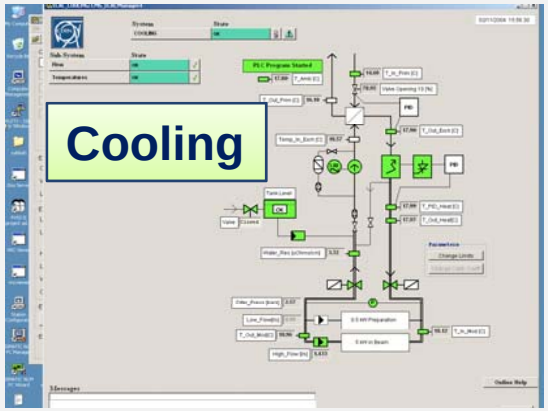

ECAL DCS in ECAL test setups

ECAL DCS supports ECAL test setups for several years growing itself from prototypes towards the final full scale version.

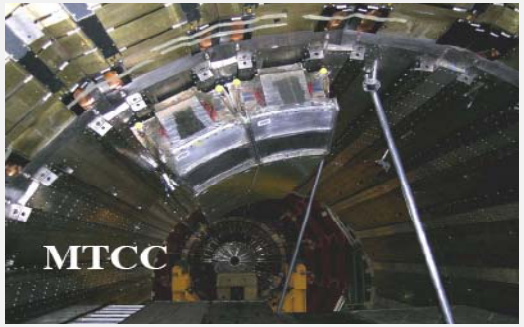

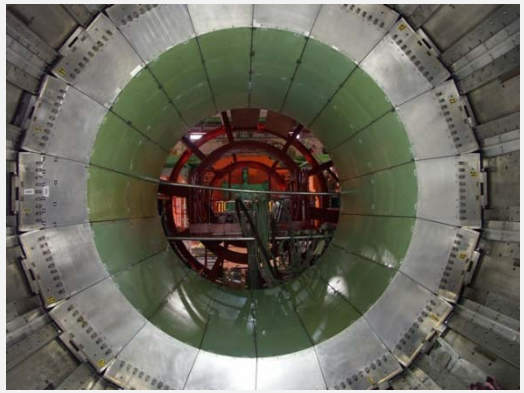

ECAL DCS
simultaneously supported
up to 4 ECAL setups
running at different locations:

- ECAL electronics integration center
- H4/H2 testbeams and cosmic calibrations
- CMS MTCC 2006
- ECAL barrel SM tests during insertion in CMS
- now supports 1x SM for CMS "global runs"

DCS availabilty = 99.9%
(1% → NICE patches, power cuts)

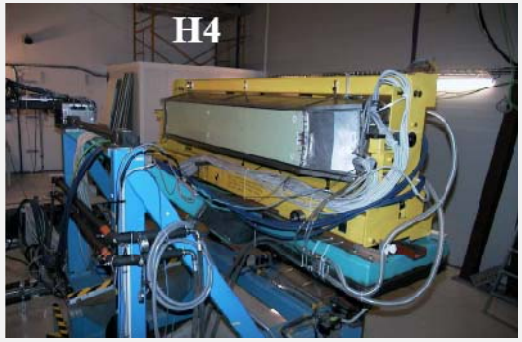

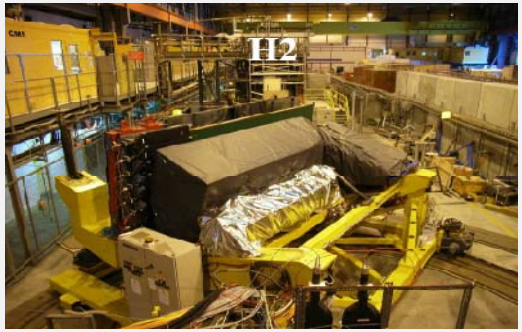

Summary and outlook

Design and implementation process was not easy and straightforward but ECAL DCS now provides:

- Well tested and proven safety functionality (**ESS**);
- High precision measurements for temperature monitoring (**PTM**);
- Integrated controls/monitoring for all ECAL services (**all other DCS subsystems**).

Installation/commissioning status:

- ECAL services and ESS hardware mostly **pre-tested and installed**; PTM/HM hardware under test/calibration in the lab – **to be moved to P5 soon**.
- Subsystem specific commissioning is ongoing (where standalone tests possible). DCS overall system commissioning to be started immediately after the ECAL cabling (now in progress) is done.
- Thereafter ECAL DCS will enter **routine operation phase – for next ~10 yrs.**

Back-up slides

Compact Muon Solenoid

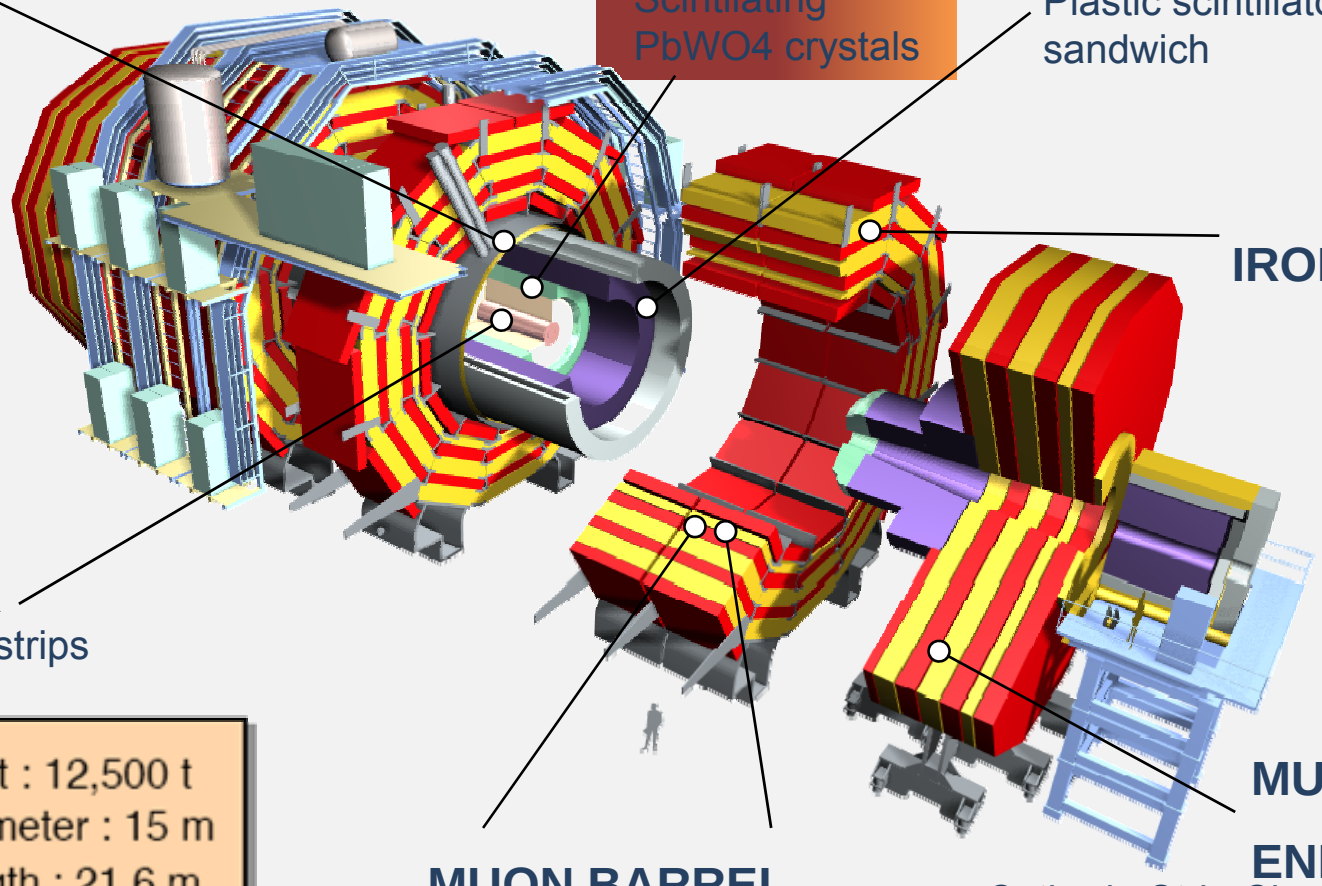

Total weight : 12,500 t
Overall diameter : 15 m
Overall length : 21.6 m
Magnetic field : 4 Tesla

ECAL design criteria

Physics goal - The discovery of the Higgs at the LHC

Preferable channel for low mass Higgs search (m_H<130 GeV): $H \rightarrow \gamma\gamma$

Detector design criteria:

- **High energy and mass resolution:**

$$\frac{\sigma_E}{E} = \frac{a}{\sqrt{E}} \oplus \frac{b}{E} \oplus c$$

Stochastic term (a):	2.7% (5.7%)	(photo and lateral fluctuations),
Noise (b):	155 (205) MeV	(electronics, APD leak currents),
Constant term (c):	0.55%	(non-uniformities, leakages, calibration)

- **High degree of hermeticity and granularity**
- **Compact,** operated in magnetic field of 4T
- **Radiation tolerance** to appropriate radiation doses:
  - Neutron fluence 1.2×10^{13} cm^{-2}, integrated dose 1 kGy at position $\eta = 0$
  - Neutron fluence 5×10^{14} cm^{-2}, integrated dose 50 kGy at position $\eta = 2.6$.
- **Fast response time** for 40 MHz bunch crossing rate.

Stabilization of ECAL parameters

Laser system for control of crystal transparency

- Two wavelenghts (440 nm, 495 nm)
- Pulse energy 1 mJ (1.3 TeV in dynamic range)

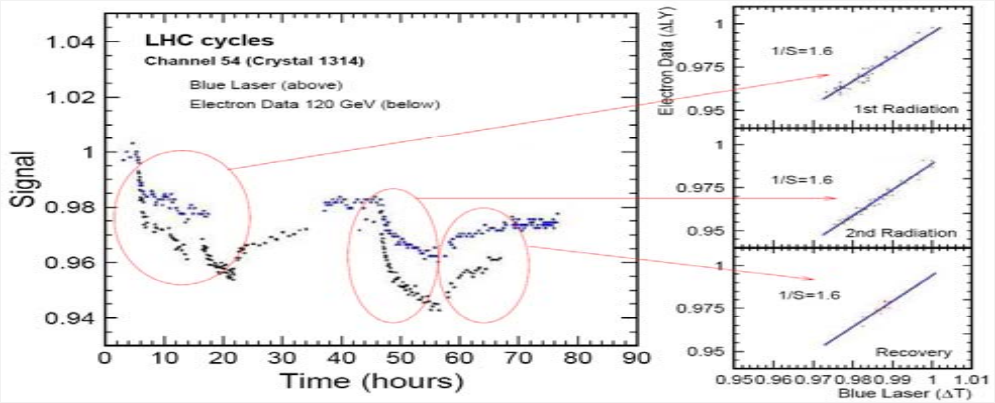

Temperature stabilization

- Stabilized water temperature at 18.00 ± 0.05 °C;
- Thermal shielding of ECAL crystals from Tracker and ECAL electronics;
- Water cooling of ECAL electronics.

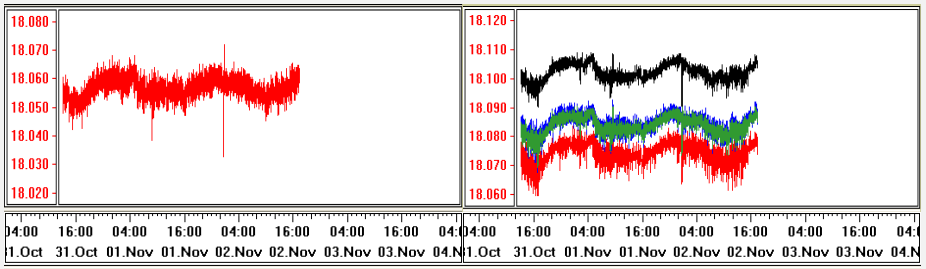

Stabilized HV power supply for APD diodes

- C.A.E.N. SY1527 (0-500V, 15mA)
- Output voltage stability ~350 ± 0.02 V

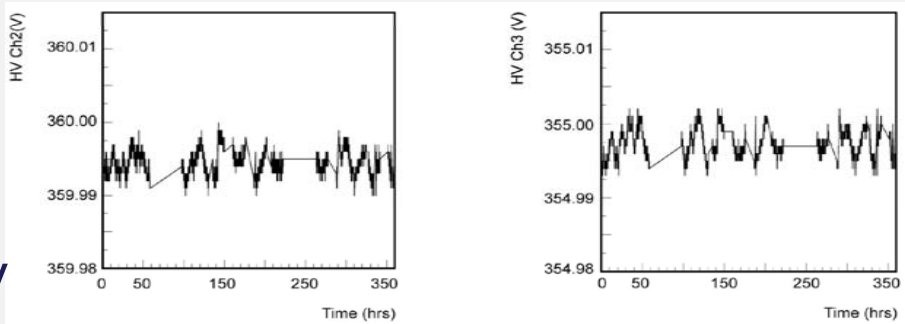

ECAL Cooling, LV, HV -- overview

ECAL cooling system

primary circuit – CMS chilled water plant (11-14ºC).
secondary circuit – ECAL cooling (actually a heater) to get 18ºC.
distribution infrastructure – individual pipes to each Supermodule/Dee.
flow-meters / temperature sensors / valves – on each pipe.
PLC based monitoring / regulation / controls – monitored with DCS application.

ECAL LV system

5V DC regulated to all ECAL on-detector electronics.
136 crates (Wiener MARATON), 850 channels in total.
distribution infrastructure – individual cables to SMs/Dees.
remote controls of Wiener crates via CAN bus – DCS application.

ECAL HV system

400 V DC regulated to APDs/VPTs.
18 crates (CAEN sy1527), 1224 channels in total.
distribution infrastructure – individual cables to SMs/Dees.
remote controls of CAEN crates via Ethernet – DCS application.

ECAL DCU readout, Laser -- overview

- ECAL DCU readout
  provides monitoring of detector and on-detector electronics parameters:
  - crystal/APD temperatures
  - APD leakage currents
  - LV supply values on LVR
  - VFE/FE card temperatures
  - ~100,000 values for the whole ECAL

  Readout via DAQ – DCS application takes data from XDAQ application.

- ECAL Laser monitoring
  provides a reference light signal to every crystal in order to calibrate on-detector electronics.

  A dedicated laser control system indicates its state and the main laser parameters (just a few values) to a DCS application.

ECAL DCS interconnections

ECAL DCS receives commands:

1. **from CMS "Run Control" via CMS DCS (CMS operational mode)**
   or
2. **from ECAL "Run Control" (ECAL local operational mode, commissioning)**

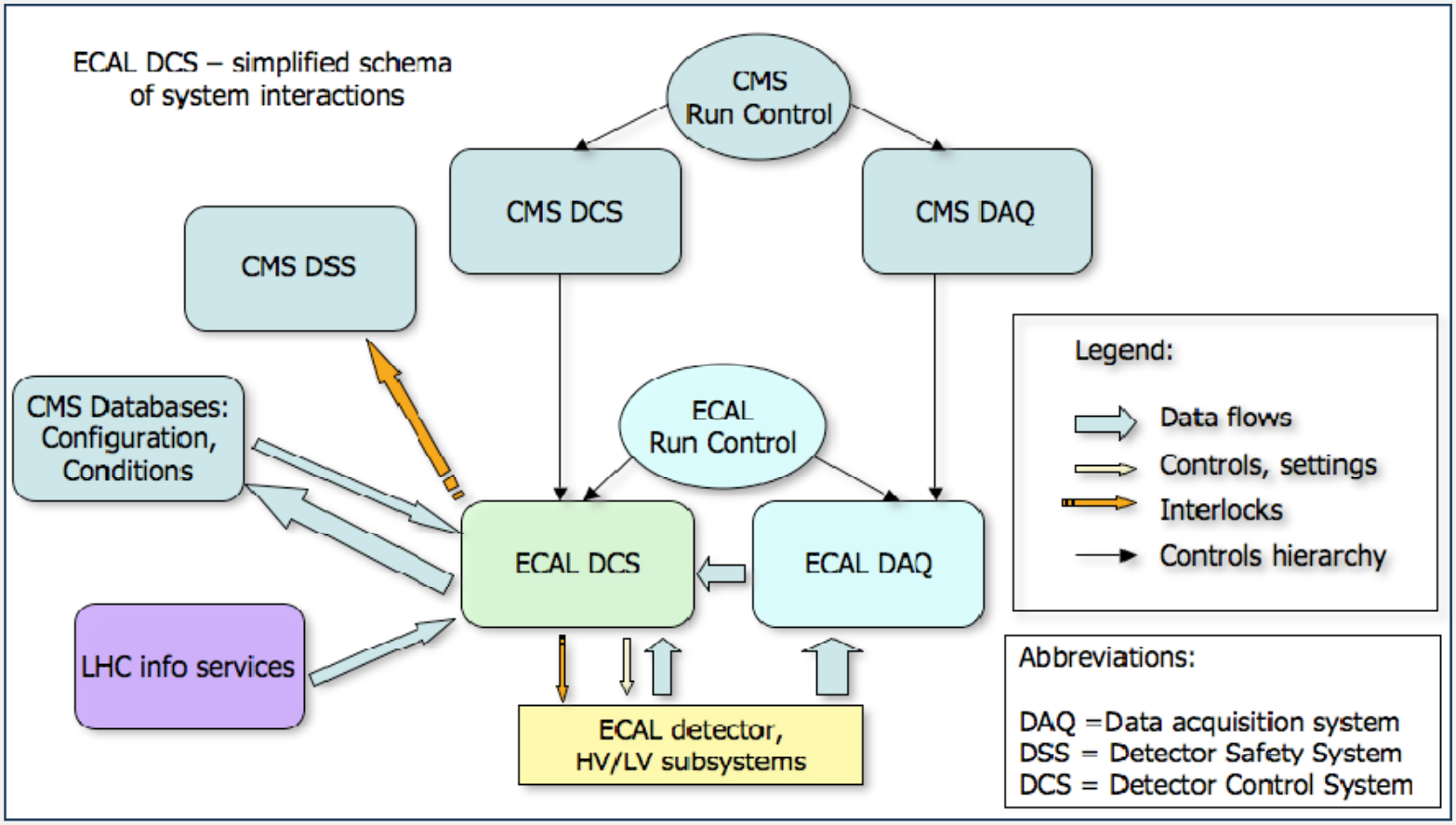

PTM/HM readout system – ELMB

ELBM boards developed by ATLAS DCS in collaboration with NIKHEF

Main features:

- Master/Slave Processors: **ATMEL AVR RISC (ATmega103)**
- CAN Controller (Infineon) (CAN Baud rate and Node ID setting via DIP switch)
- 2 High Density SMD Connectors
- 64 analogue input channels
- Optional 64 ch. 16+7 bit ADC

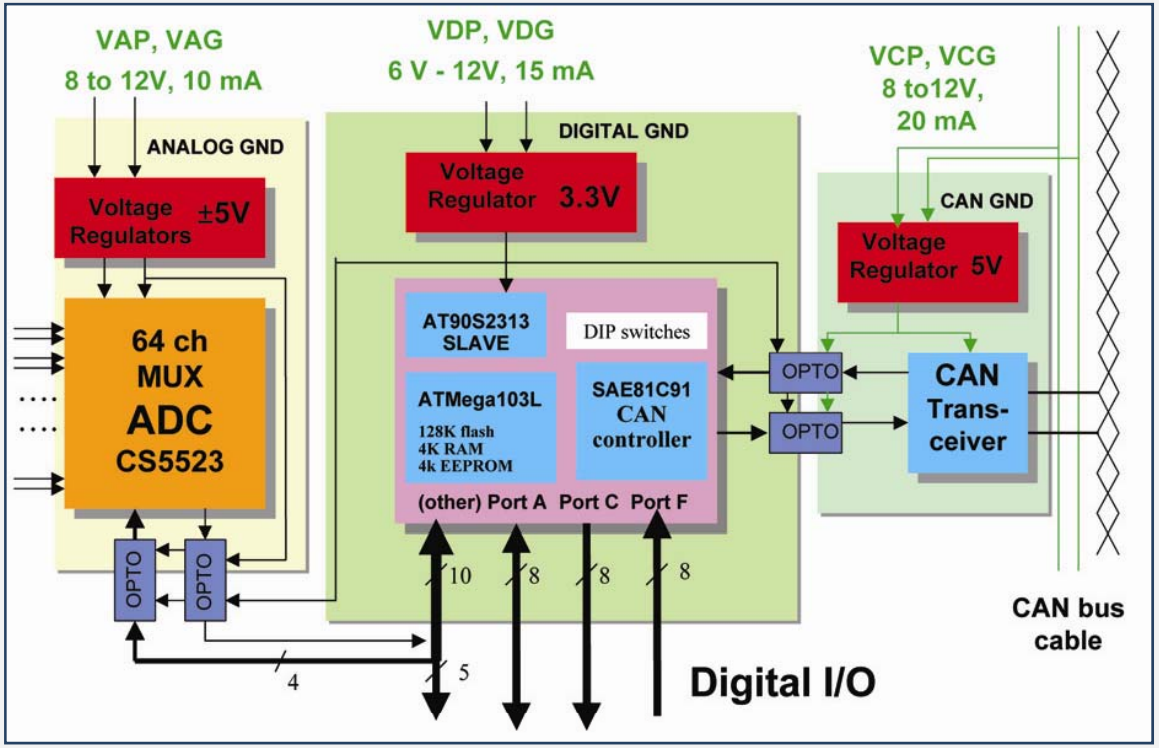

I/O Lines Available:

- 6 external interrupt inputs
- 4 bi-directional I/O ports (A, D, E, F) for ext. SRAM (A), analog inputs (F)
- 1 bi-directional I/O port (B) used for jumper reading.
- 8 bit Digital Output port (C)

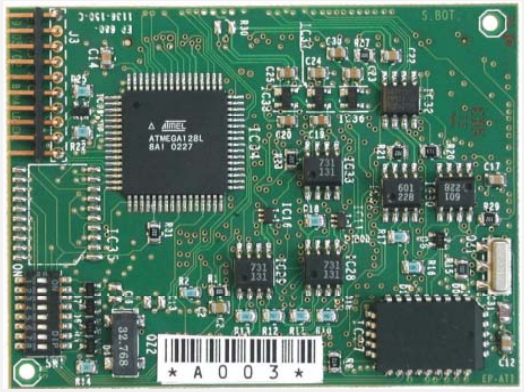

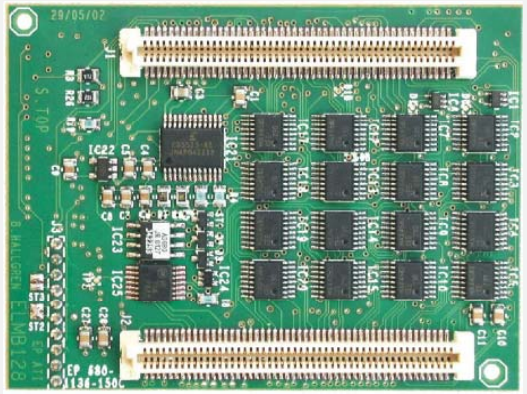

Implementation of the PTM system

PTM temperature sensors:

In total **360 + 80 100 kOhms NTC thermistors** (Bethaterm) positioned at 8 measurement points inside SM and 2 points at cooling pipes

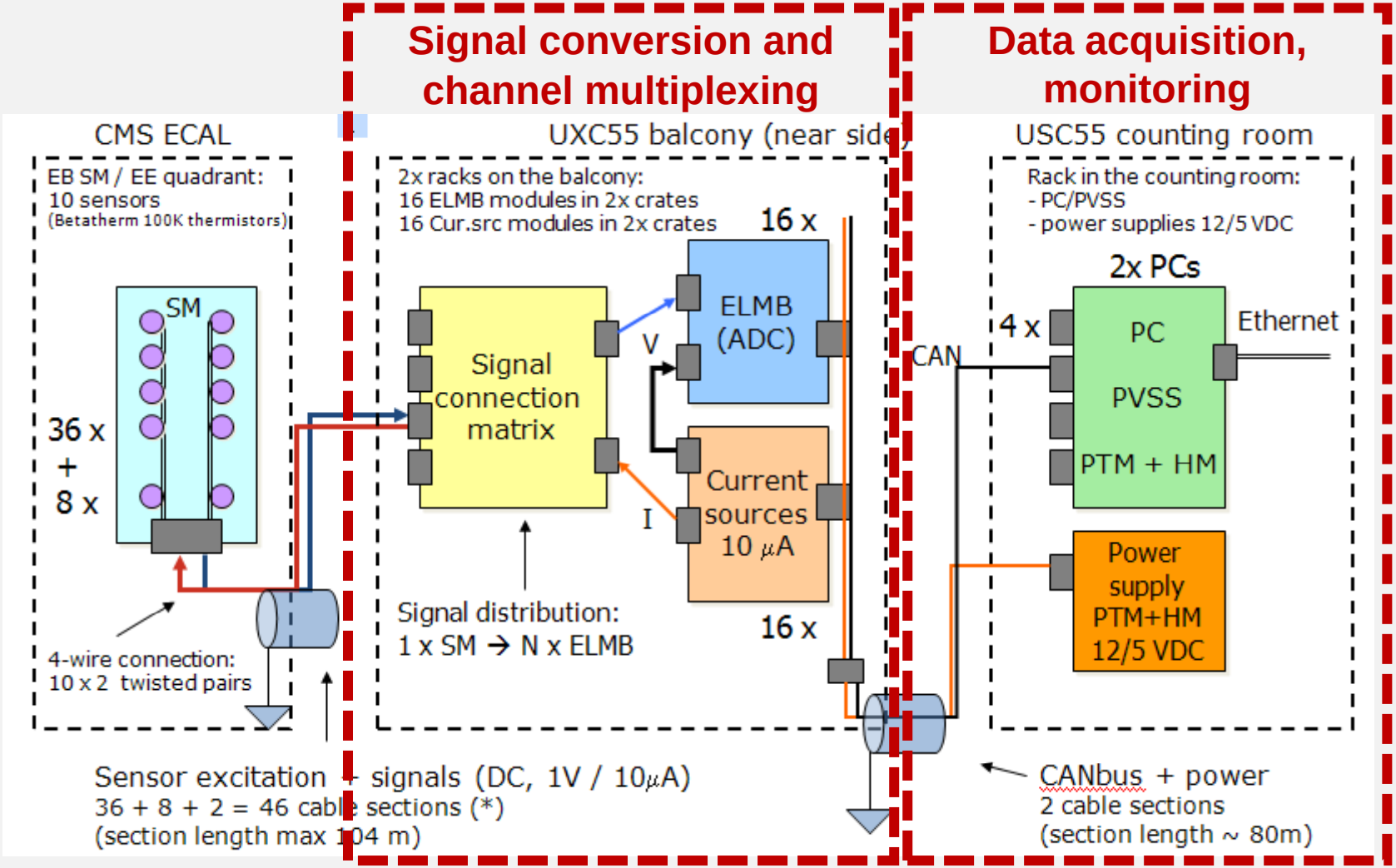

Implementation of the HM system

HM humidity sensors:

In total **144 + 32 UPS600** sensors by Ohmic Instruments positioned at 4 measurement points inside SM

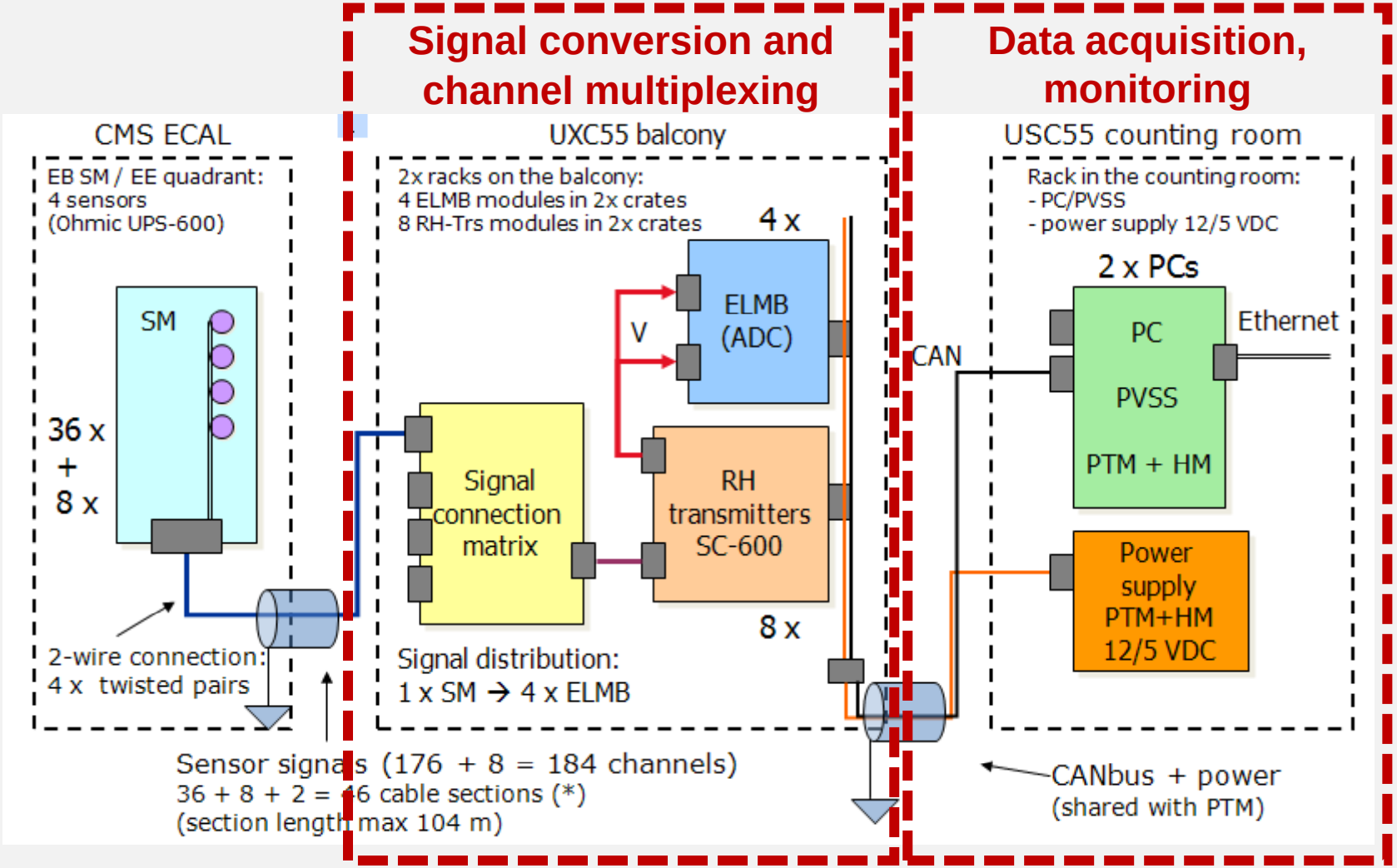

PTM performance

H4 testbeam (August 2007)

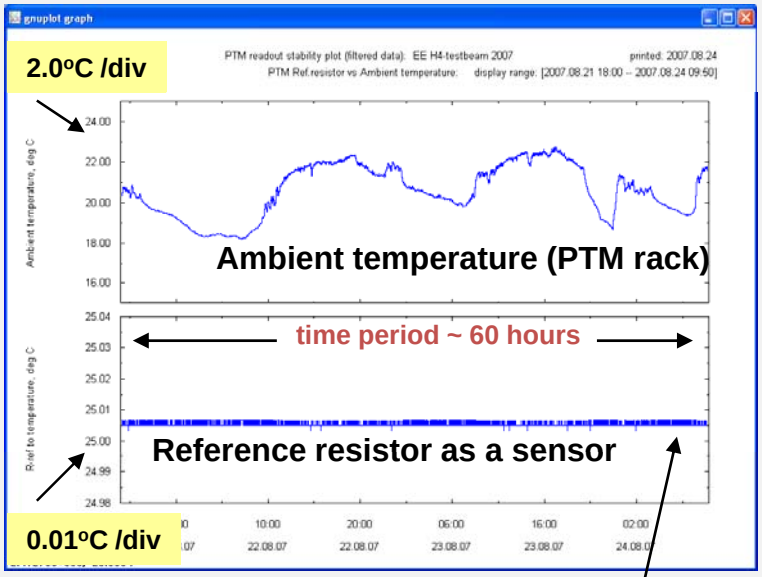

PTM readout stability monitoring (by measuring a 100K 0.6 ppm/°C reference resistor)

Stability is better than 0.001°C
Resolution is ~ 0.0008°C

CMS (August 2007): EB SM-15

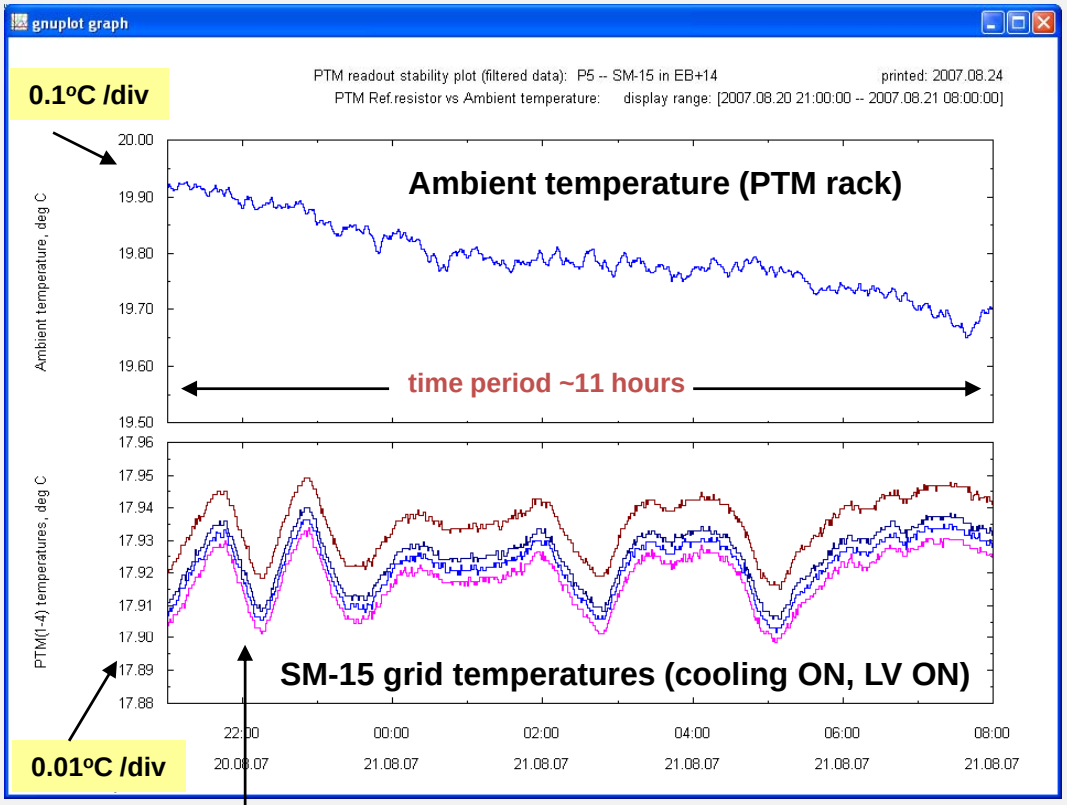

Noise is negligible – at the level of resolution (~0.05°C oscillations are from the cooling system regulation feedback loop not yet finally adjusted)

FE components of the ESS

ESS temperature sensors:

In total **288 + 64 SMD, 470 Ohms NTC thermistors** (EPCOS) positioned in pairs at each measurement point (“twin” sensors).

- 8 / EB SM
- 8 / EE quadrant

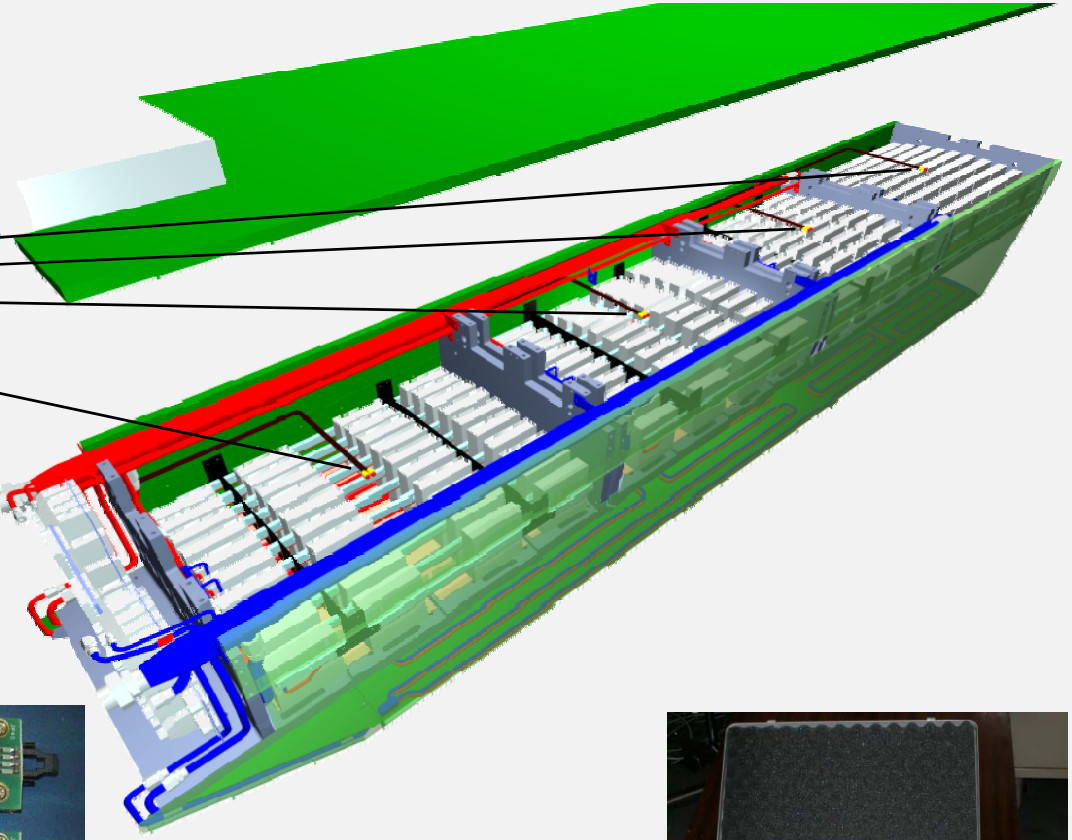

- Sensor calibration with relative precision better then 0.2 ^{o}C. Special procedure developed.

Produced by:
CMS Belgrade Group:

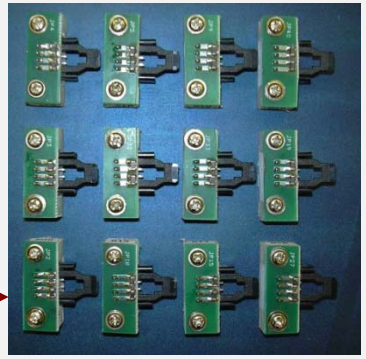

Delivered to CERN in January 2006:

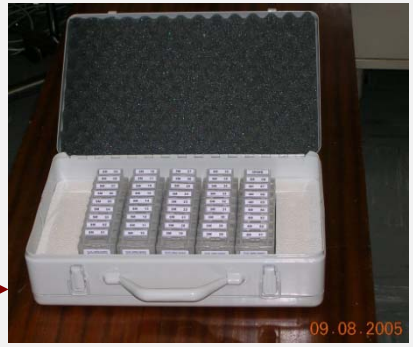

FE components of the ESS

Multiplexer Max4582:

- CMOS compatabile
- Temperature range
  0°C - 70°C
- ON-resistance
- до 150 Ohms на 5V
- OFF-leakage current
  1nA at 25°C
- Low level of channel crosstalk
- tested for tolerance to certain rad. doses

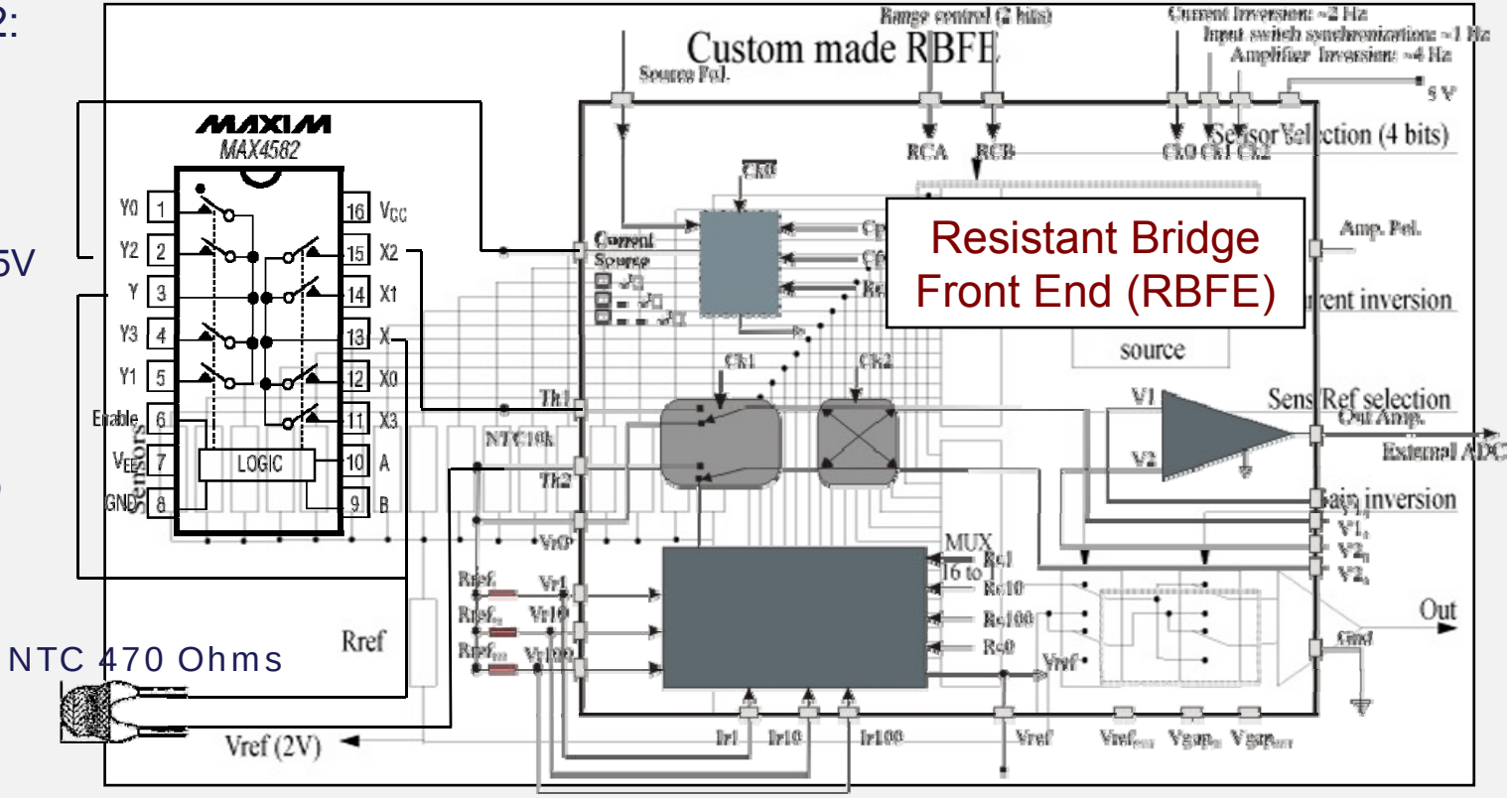

Resistant Bridge Front-End block of electronics:

- Bidirectional programable internal current source (500µA),
- Differential amplifier, optimal amplification adjustment for ESS, output range: 0 - 4V,
- Analog switches, 8 masurement modes, digitally controlled by three bits (Ck0, Ck1 и Ck2),
- Removes voltage offsets, thermocouple effects, dependence on supply voltages and temperature drifts

FE components of the ESS

ESS Readout Unit:

- Multiplexing + Resistant Bridge Front-end
- Redundant temperature readout:
  1 unit - 4 Super Modules,
  12 units in total (EE+EB+EB+EE)
- Reliability analysis

Water leakage detection (WLD) inside the ECAL:

- Commercial sensor-cable
  by RLE Technology
- 2 wires with non-conductive coating
- 2 wires with conductive polymer coating
- Determines both presence and position of
  water leakage in the system

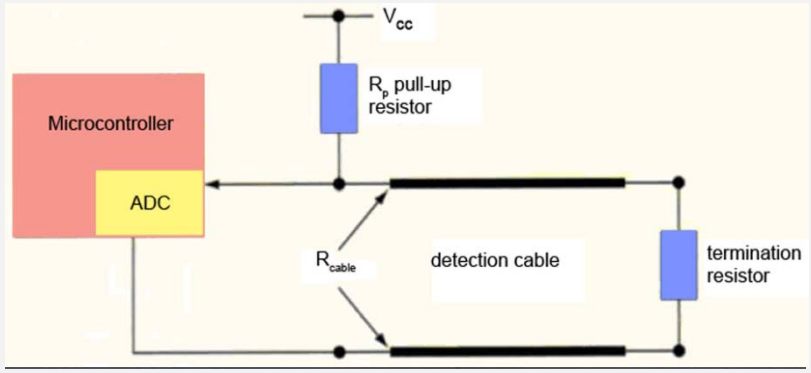

ESS digital filtering

Basic filter design objectives:

- Fast filter response to impulse and step excitation
  (about 5 – 6 samples to reach 90% of final response value);
- Small "overshot" value for impulse and step response
  (about 10 – 15 % of impulse/step amplitude);
- Low filter order (small number of filter coefficients)
- NF filter
  Frequency selectivity not of primary importance.
  (cut frequency of PB ~ 5–10 Hz,
  signal attenuation in NB ~ 60 dB)
- Stability. Tolerant to digitalization effects
  and selection of initial conditions.

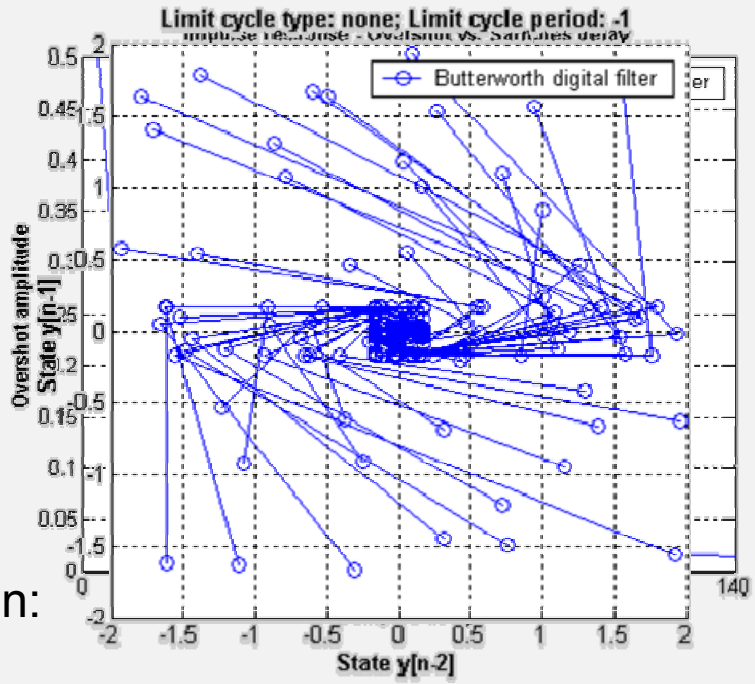

Results: Digital IIR filter of second order
(based on Butterworth function) with response function:

$$H(z) = \frac{0.020083 + 0.040167z^{-1} + 0.020083z^{-2}}{1 - 1.561018z^{-1} + 0.641352z^{-2}}$$

Stable, tolerant to digitalization effects and selection of initial conditions!!!

ESS irradiation tests

Radiation effects:

- Cumulative radiation effects (ionization effects, displacement effects)
- „Instantaneous" radiation effects (energy deposition of one passing particle)

Irradiation performed with OPTIS proton 64 MeV beam at PSI:

- Maximal flux 1.1 x 10^{10} protons cm^{-2} s^{-1} (minimal flux 1.1 x 10^{7} protons cm^{-2} s^{-1})

Irradiation tests of:

- ESS sensors and cables for sensor readout (up to **200 kGy**)
- Maxim 4582 multiplexers, RBFE electronics and PIC microcontrollers (up to **60 Gy**).

No change of any analogous parameter.

Negligible cross section for SEE!

Test boards with irradiated sensors and "ESS-FE" electronics (8 hours)

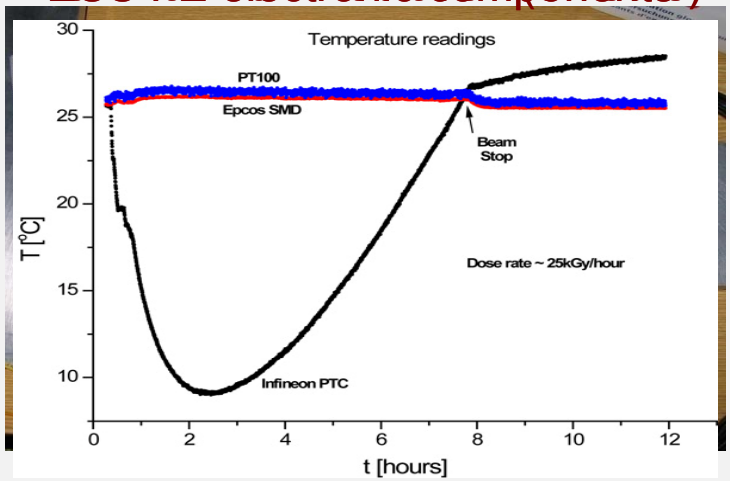

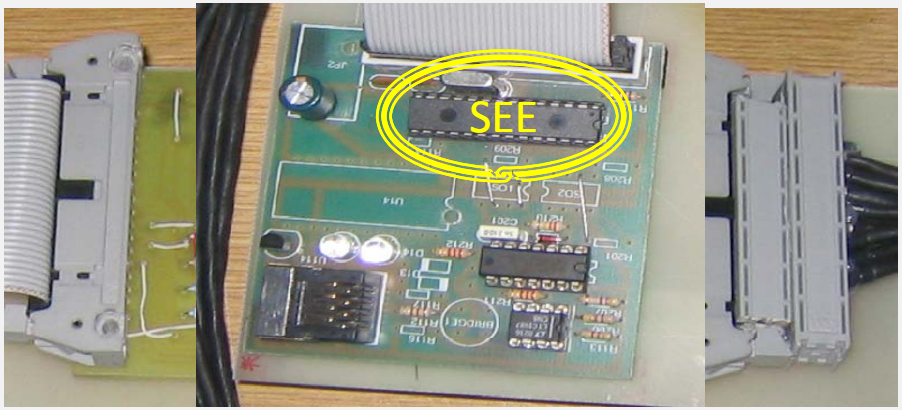

ECAL Test-beam results with final electronics

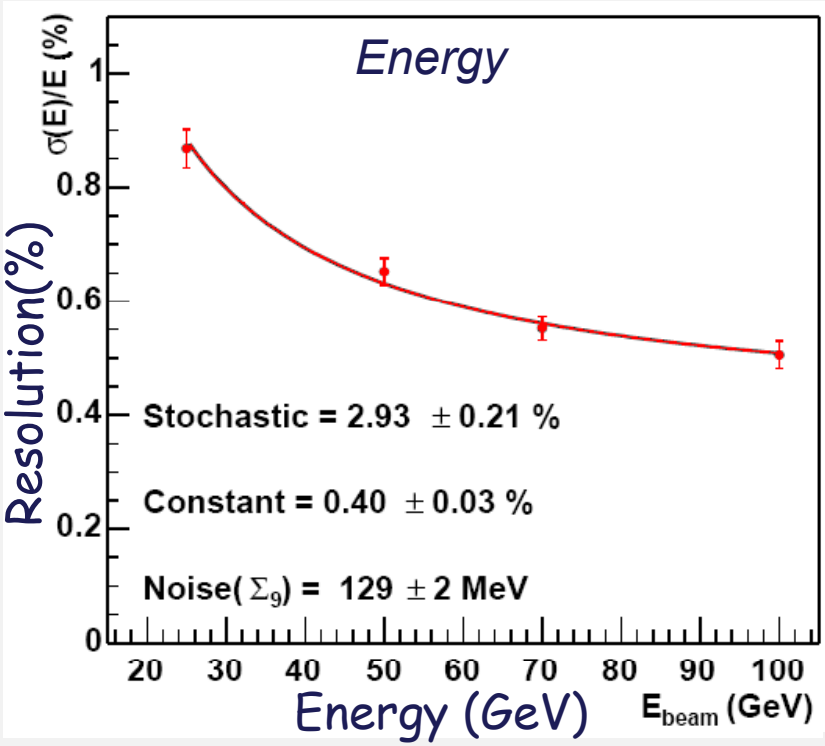

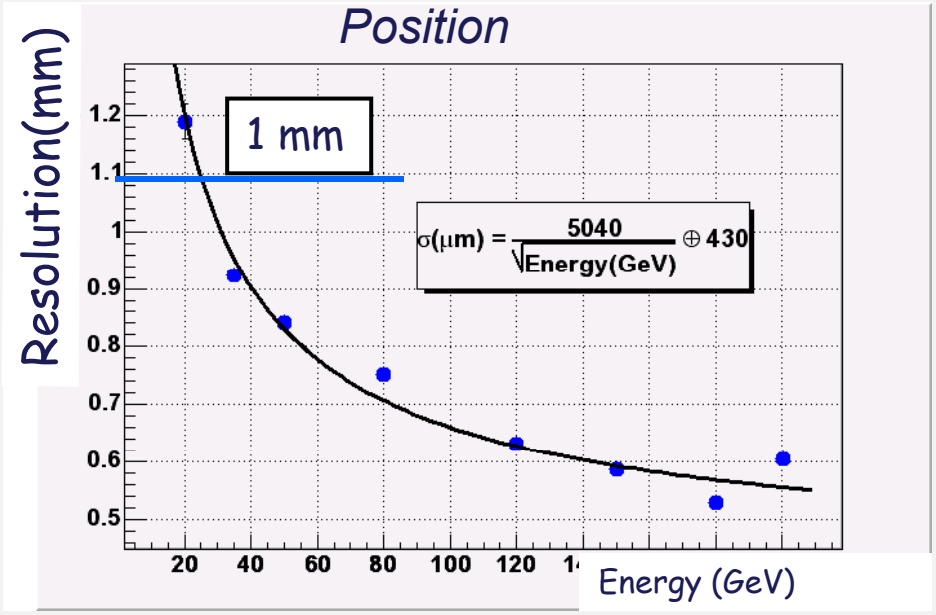

$$\frac{\sigma(E)}{E} = \frac{2.9\,\%}{\sqrt{E}} \oplus \frac{129\,\mathrm{MeV}}{E} \oplus 0.40\,\%$$

0.6% at 50 GeV.

$$\sigma_Y\,(\mu m) = \frac{5040}{\sqrt{E}} \oplus 430$$

0.85 mm at 50 GeV.

Target calorimetry resolution achieved with new electronics design!

ECAL Test-beam results with final electronics

We cannot calibrate every crystal with an electron beam.

Obtain a first calibration point from component data: crystal light yield, APD & PA gain.

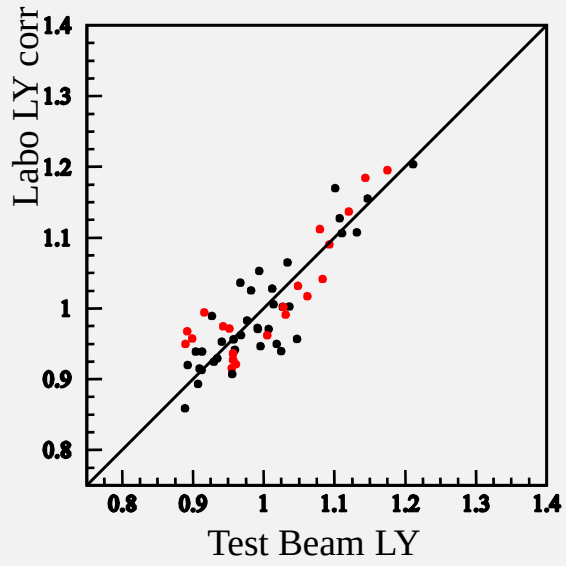

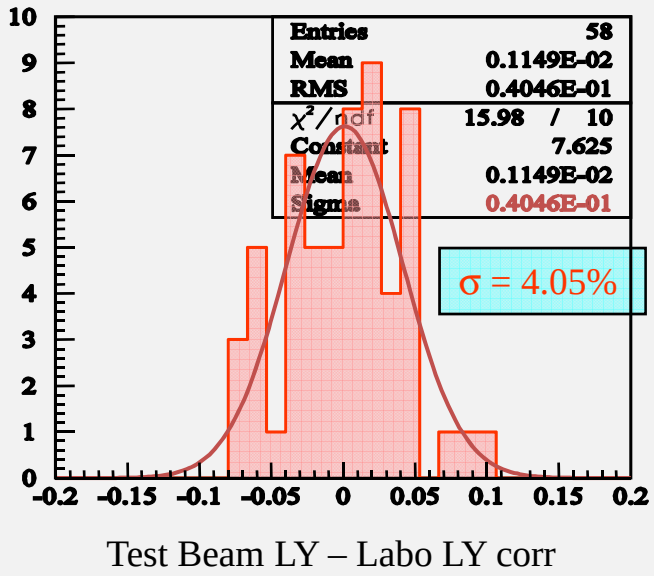

Relative channel calibration can be obtained from Lab with a precision of 4 %

In situ:	Fast intercalibration based on ϕ symmetry in energy flow	2% in few hours
	Energy/momentum of isolated electron from $W \rightarrow e\nu$	0.5% in 2 months
	Absolute energy scale from $Z \rightarrow e^+e^-$	

Conclusions and outlook

- Stabilization and control of ECAL working parameters to high precission necessary in order to achieve required detector performance;
- Detector Control System (DCS) is of crucial importance;
- Applied characteristic hardware solutions:
  - RBFE block, redundant configuration;
- Applied characteristic software solutions :
  - FSM concept, ESS protocol, digital filtering;
- Tested and proved radiation tolerance of all PTM/HM and ESS system components to appropriate radiation doses;
- DCS performance in accordance with design criteria;
- Commissioning and integration of the DCS in CMS caverns in final phase;
- Looking forward to testing all ECAL DCS systems on the full scale for the first time in October this year