FCC

Future Circular Collider

Technical Infrastructure

Cooling and Ventilation systems in the RF points

I. Martin Melero and G. Peon (EN/CV)

FCC Week 2023

06/June/2023

Outline

- RF Cooling Requirements for the FCC-ee
  - Raw water
  - Primary water
  - Demineralised water
  - Chilled water
- RF Ventilation
  - Heat loads on air
  - Access mode
  - Emergency mode
- Further steps

COOLING

Cooling Water Types.

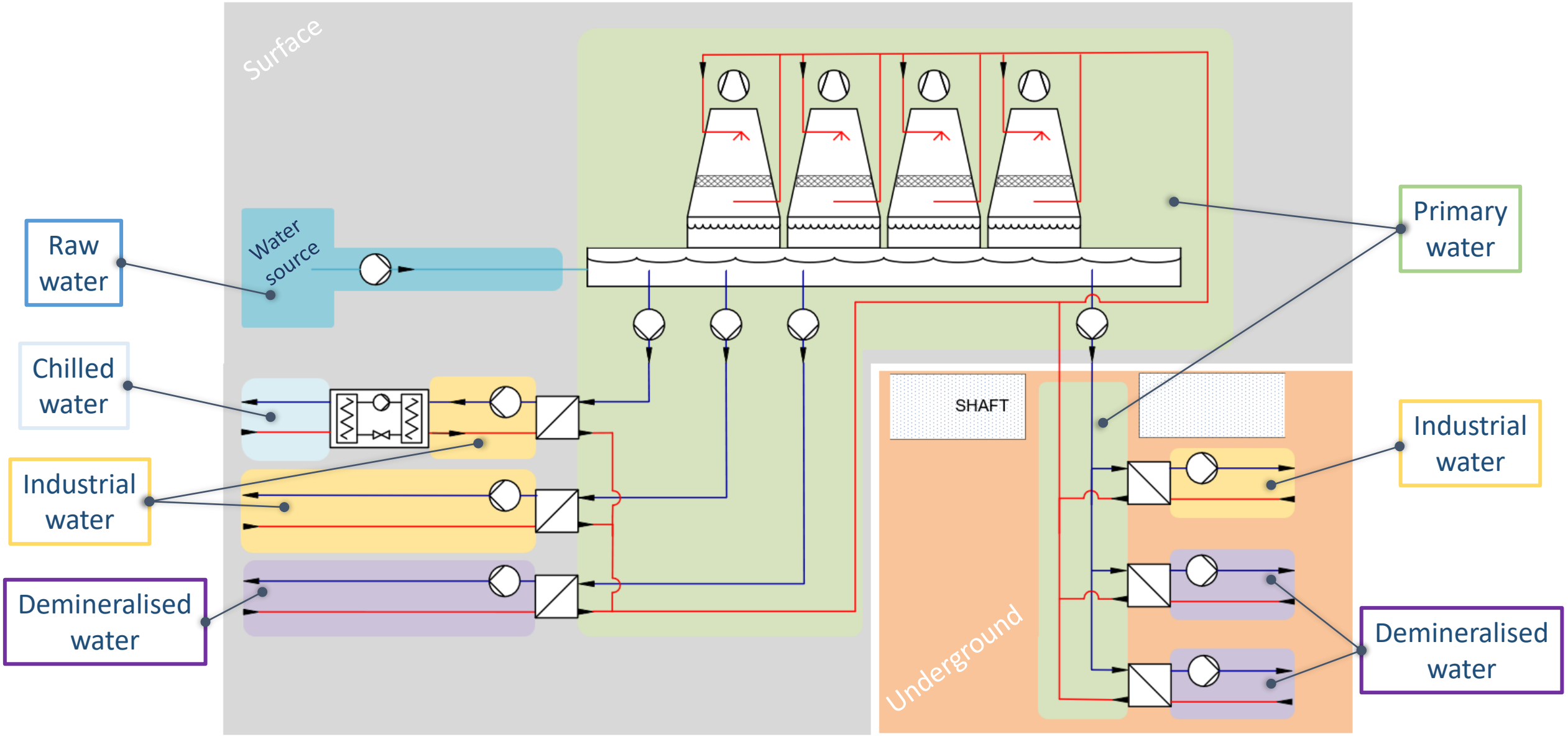

Primary Water: Requirements.

FCC-ee COOLING POWER NEEDS FOR PRIMARY CIRCUITS (MW)							
Point	Cryogenics	Experiment	General Services	Power Converters (RF)	Chilled water	Underground	**TOTAL**
A		0.5	2		4,6	42.5	**49.6**
B			2		3,9	1.0	**7.0**
D		0.5	2		4,6	42.5	**49.6**
F			2		3,9	1.0	**7.0**
G		0.5	2		4,6	42.5	**49.6**
H	40		2	4.5	10.1	48.6	**105.2**
J		0.5	2		4,6	42.5	**49.6**
L	10		2	0.07	4.5	2.5	**19.1**

Cooling requirements on surface.

Cooling requirements in underground.

~ 50% reduction with respect to previous values.

Primary Water: Cooling Towers.

Largest cooling needs
~ x 2 Cooling tower power
respect to Experimental Points

T water coming to
cooling tower: 40 ºC.

T water leaving cooling
tower: 25 ºC.

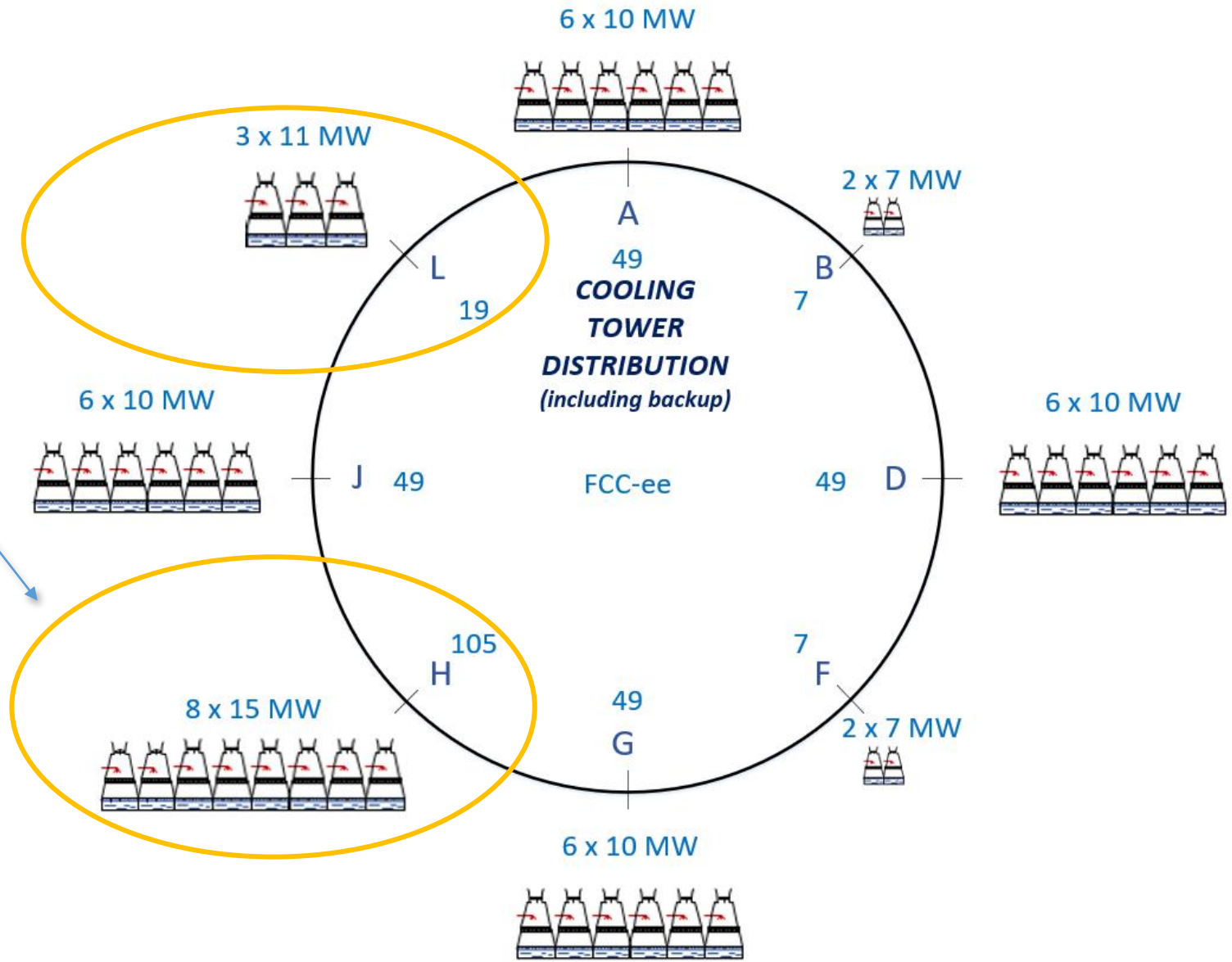

Raw Water: Needs and Distribution.

MAKE-UP WATER NEEDS (m^3/h)								
Point	**A**	**B**	**D**	**F**	**G**	**H**	**J**	**L**
Blowdown recycling	96	13	96	13	96	202	96	37
Reject water	13	2	13	2	13	27	13	5

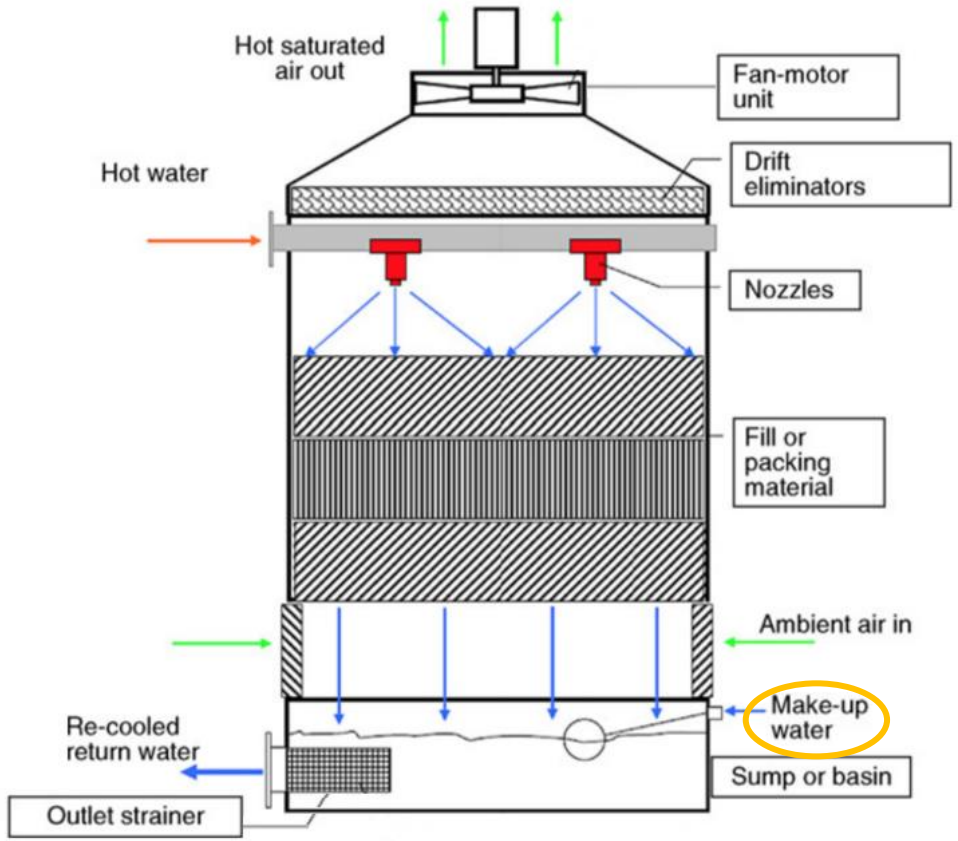

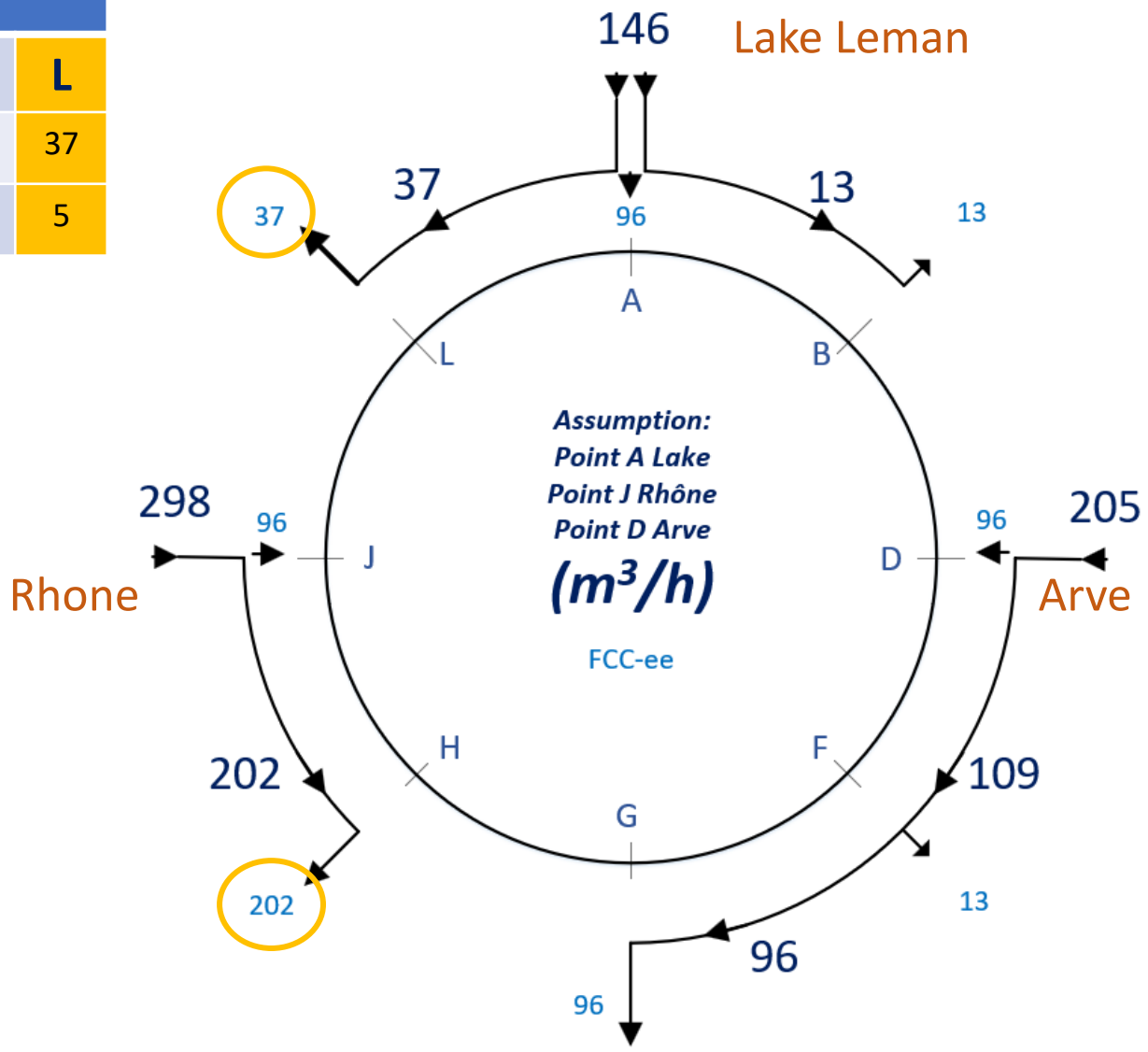

Demineralised Water: Needs.

FCC-ee COOLING POWER NEEDS FOR DEMINERALISED WATER CIRCUITS IN THE UNDERGROUND (MW)								
Point / Sectors	Magnets	Alcoves	Synchrotron Radiation Absorbers	Experimental Area	Power converters (for accelerator)	RF underground	Cryo RF	**TOTAL**
PA / L-A, A-B	2 x 7.1	2 x 0.9	2 x 12.5	0.5	1.05			**42.5**
PB					1.05			**1.05**
PD / B-D D-F	2 x 7.1	2 x 0.9	2 x 12.5	0.5	1.05			**42.5**
PF					1.05			**1.05**
PG / F-G G-H	2 x 7.1	2 x 0.9	2 x 12.5	0.5	1.05			**42.5**
PH					1.05	45.7	1.8*	**48.6**
PJ / H-J J-L	2 x 7.1	2 x 0.9	2 x 12.5	0.5	1.05			**42.5**
PL					1.05	0.69	0.8*	**2.5**

T demi water coming to heat exchanger: 47 ºC.
T demi water leaving heat exchanger: 27 ºC.

Points H and L don't provide demineralised water to equipment in Tunnel.

Cryo RF is supplied with industrial water.

Chilled Water: Needs.

POINT	COOLING POWER (kW)	FLOW RATE (m^3/h)	NUMBER OF CHILLERS	COOLING POWER/ CHILLER (kW)
A	3,834	551	5	1,000
B	3,284	472	5	900
D	3,814	548	5	1,000
F	3,284	472	5	900
G	3,834	551	5	1,000
H	8,400	1,207	6	1,800
J	3,814	548	5	1,000
L	3,779	543	5	1,000

Chilled water for cold batteries in AHUs / Fancoils in:

- Surface Buildings
- Shaft pressurization
- Service Cavern & UAs
- Half Tunnel Sector 1
- Half Tunnel Sector 2
- Klystron Galleries

T water coming to chiller: 12 ºC.

T water leaving chiller: 6 ºC.

Cooling circuits at Points H & L

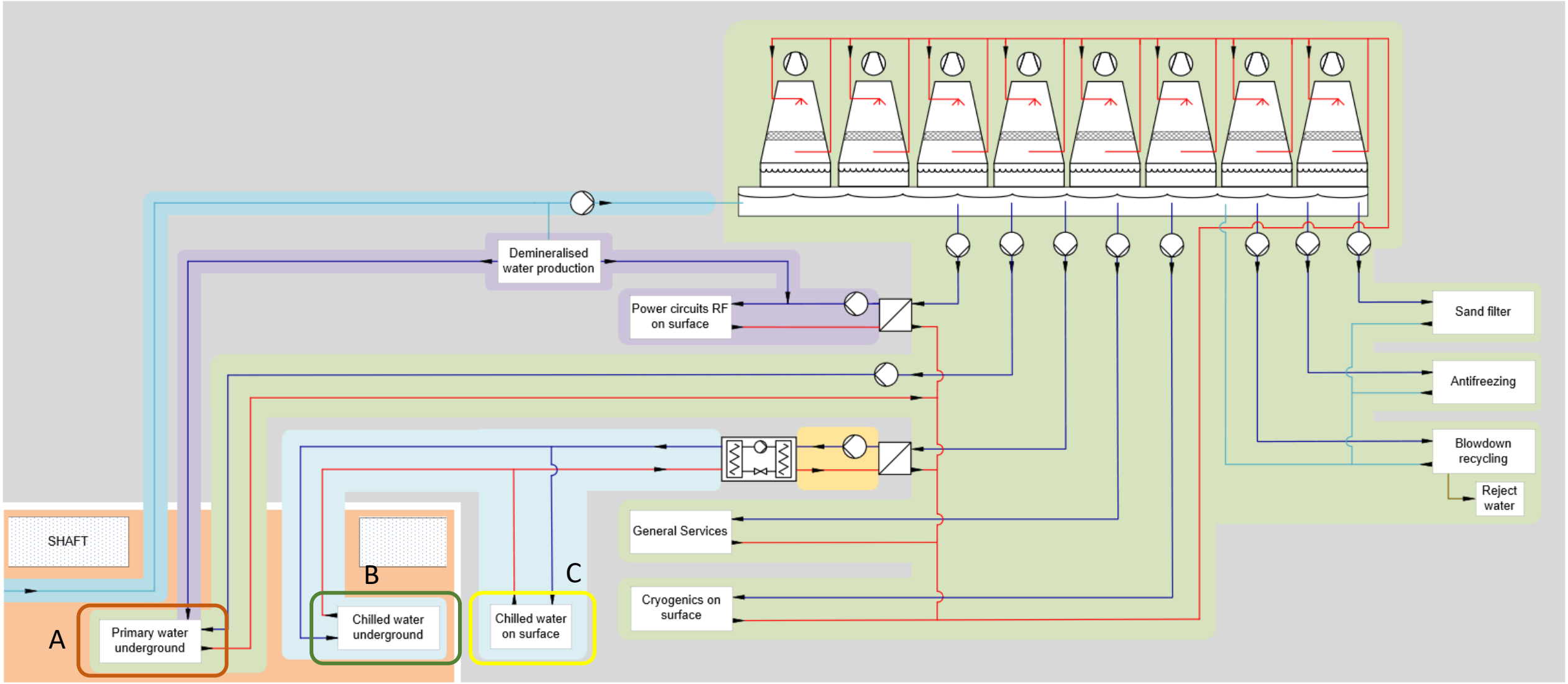

Cooling circuits at Points H & L

A

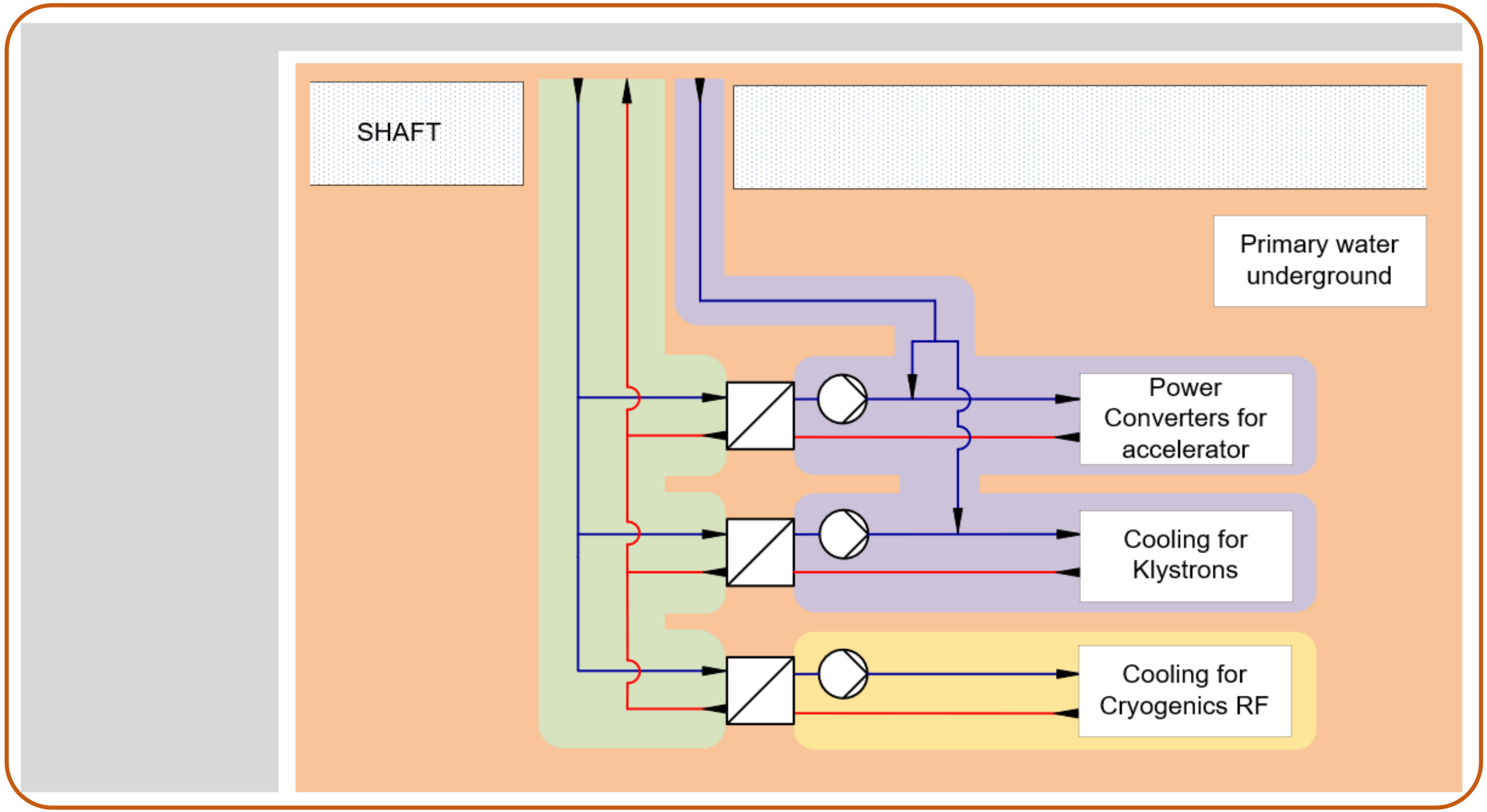

Cooling circuits at Points H & L

B

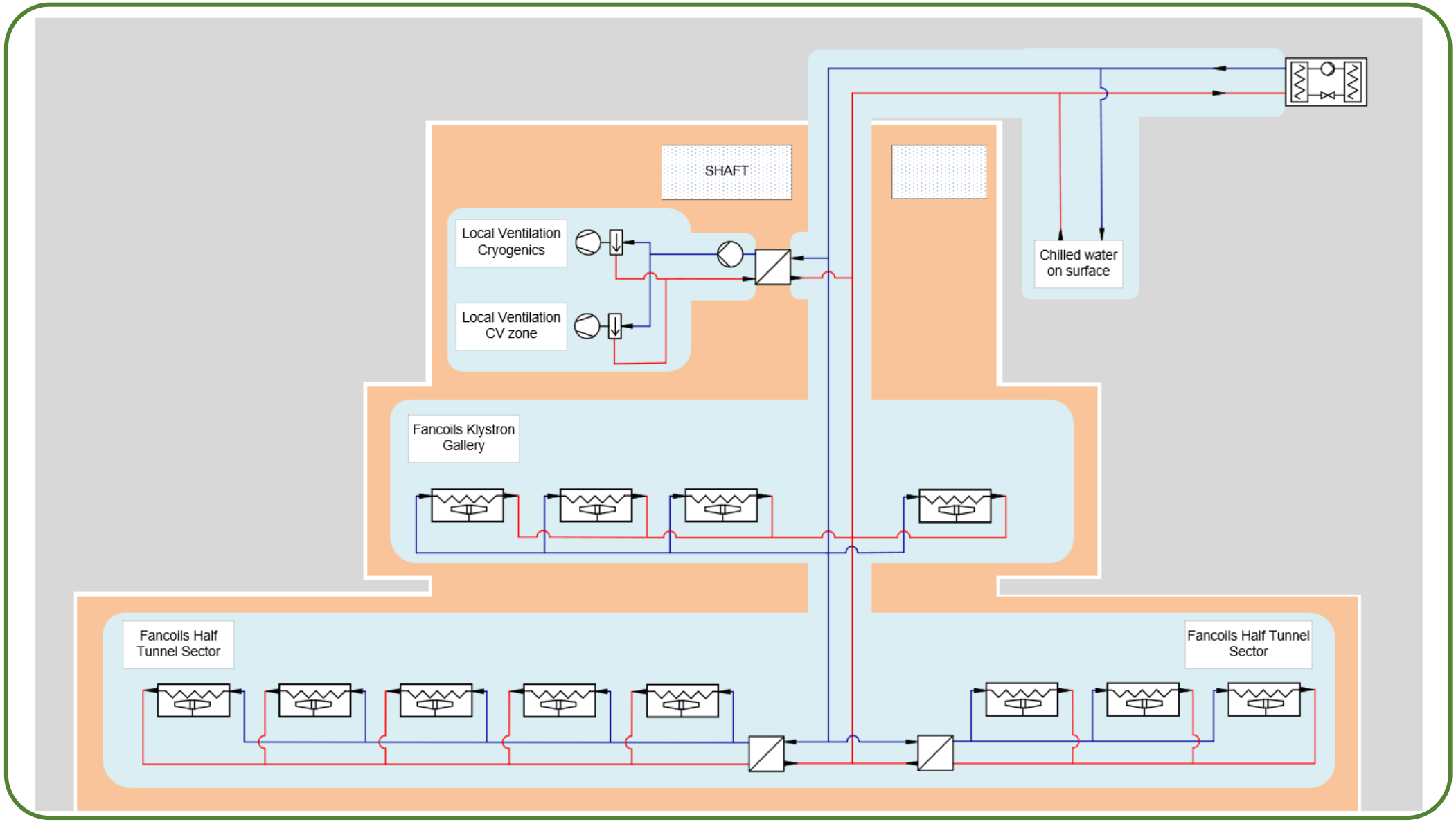

Cooling circuits at Points H & L

C

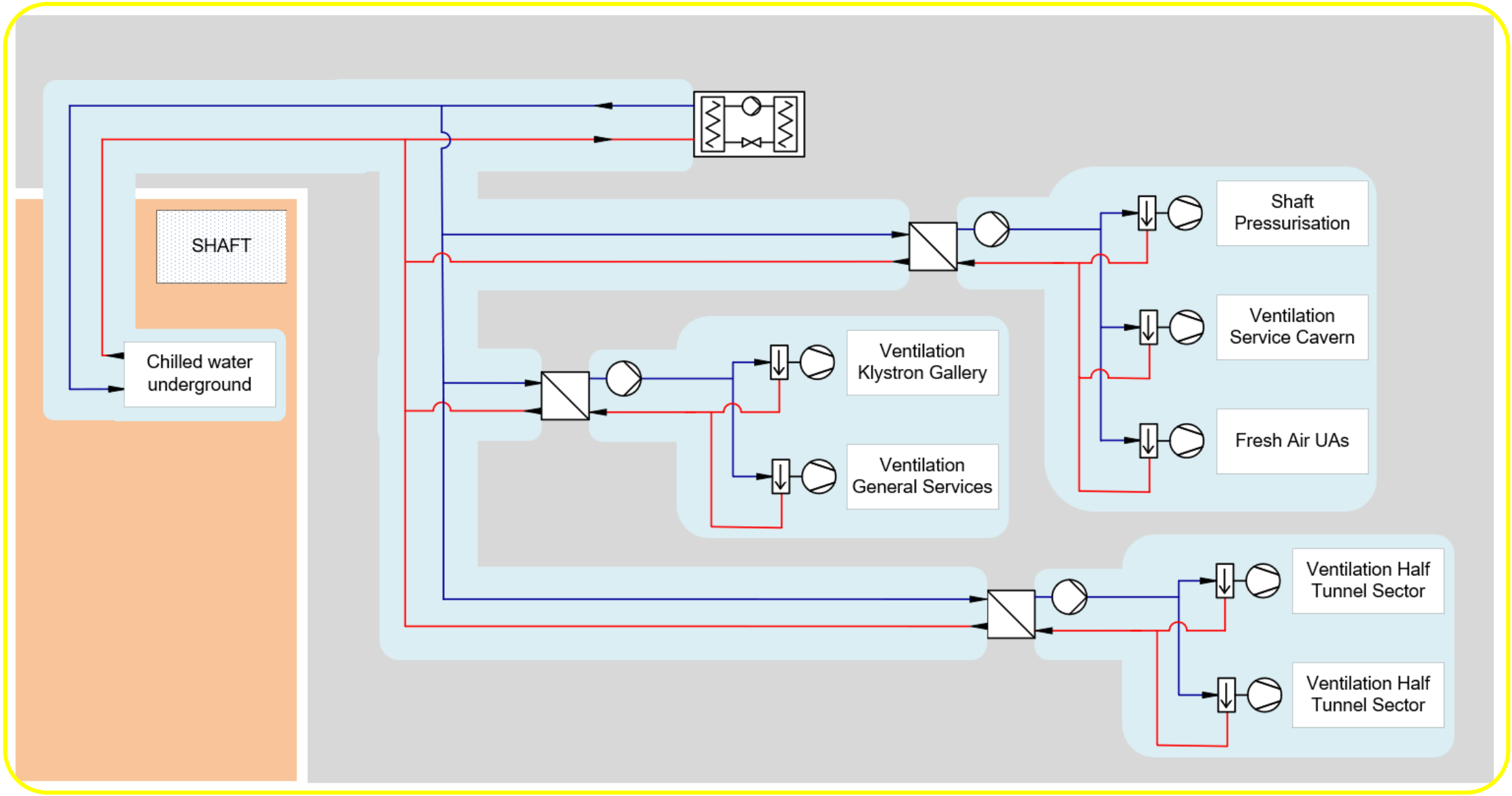

Tunnel Sector, Point H

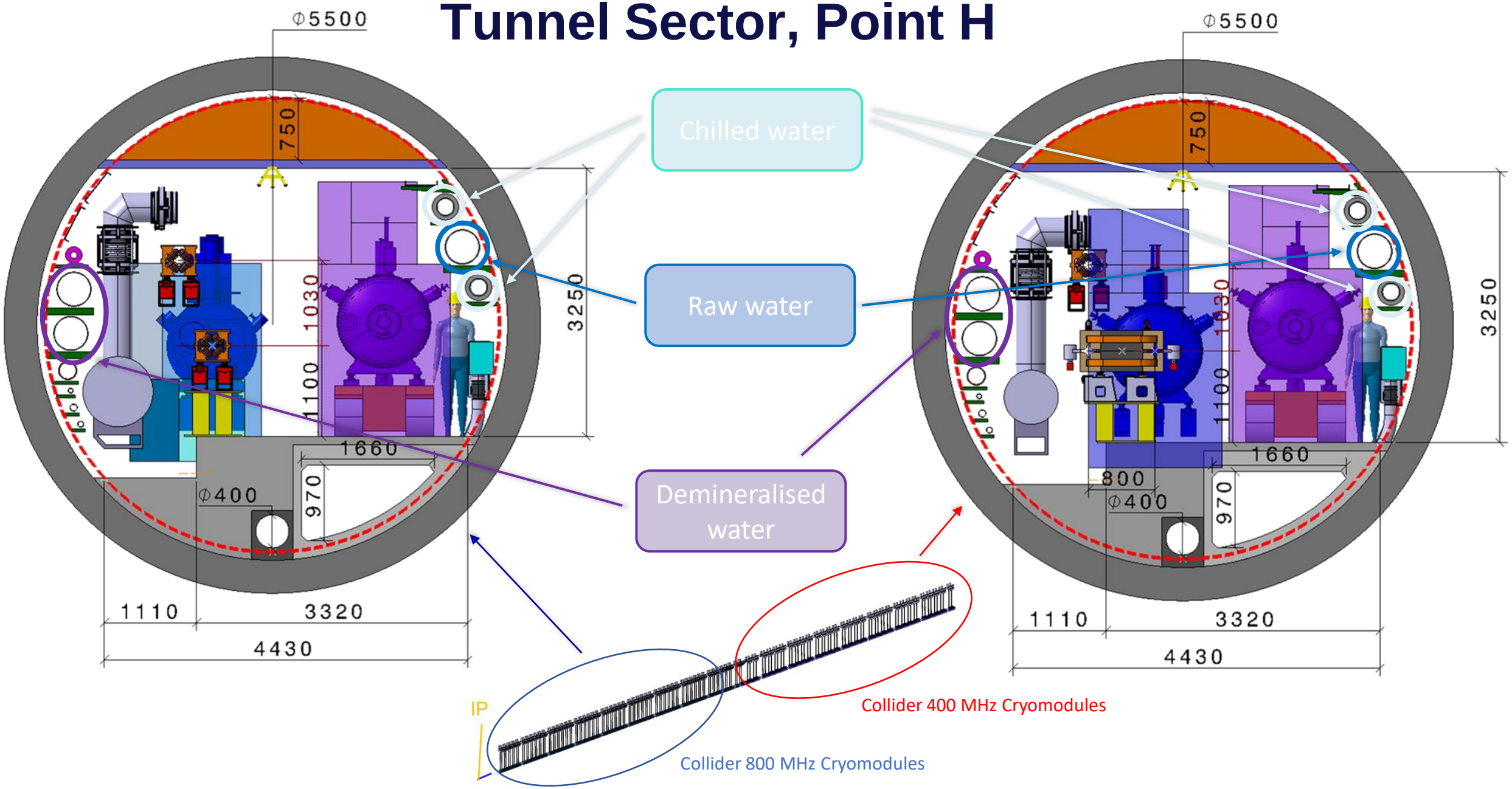

Klystron Gallery, Point H

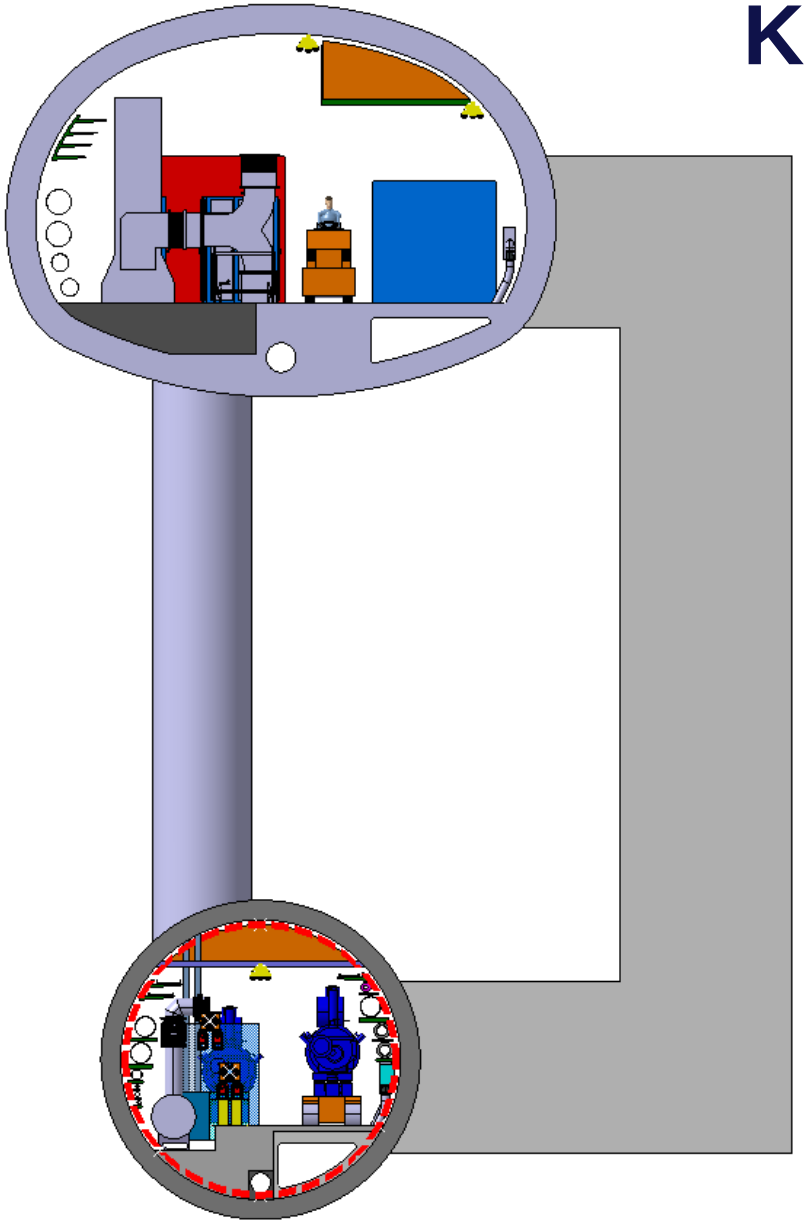

Demineralised water

Chilled water

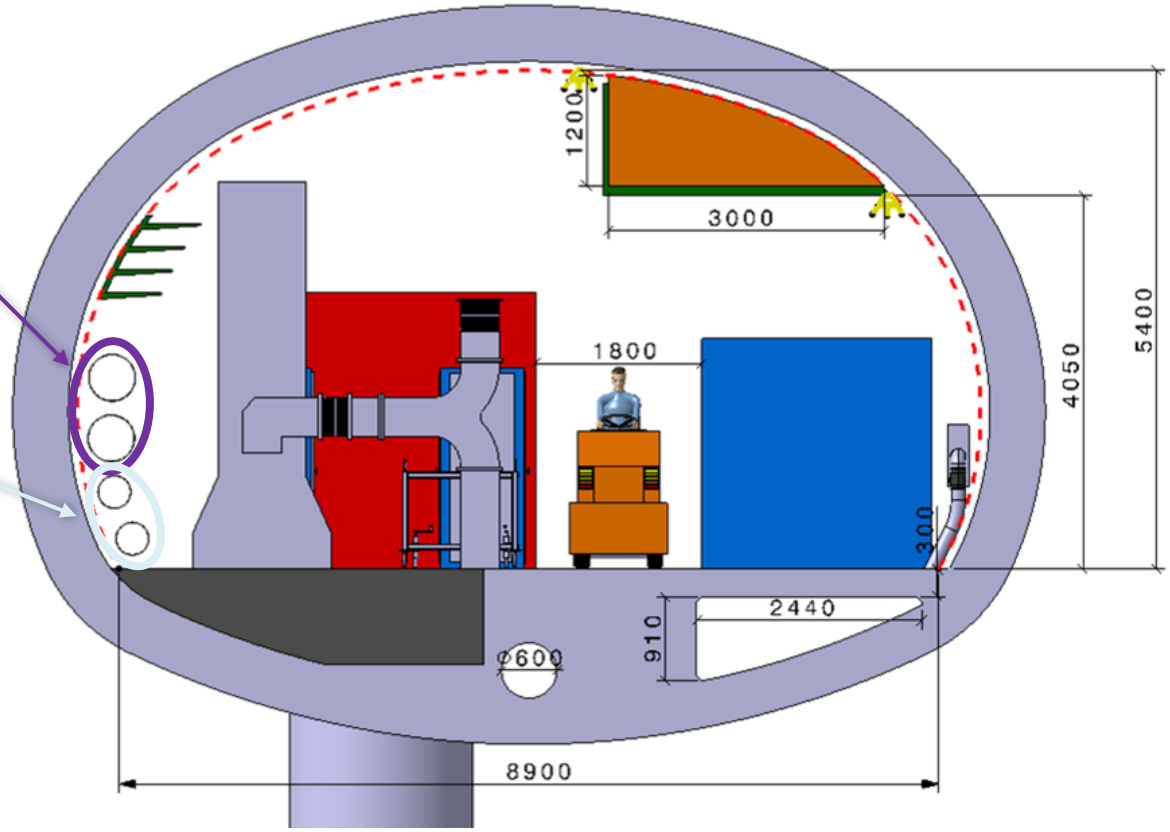

Tunnel Sector, Point L

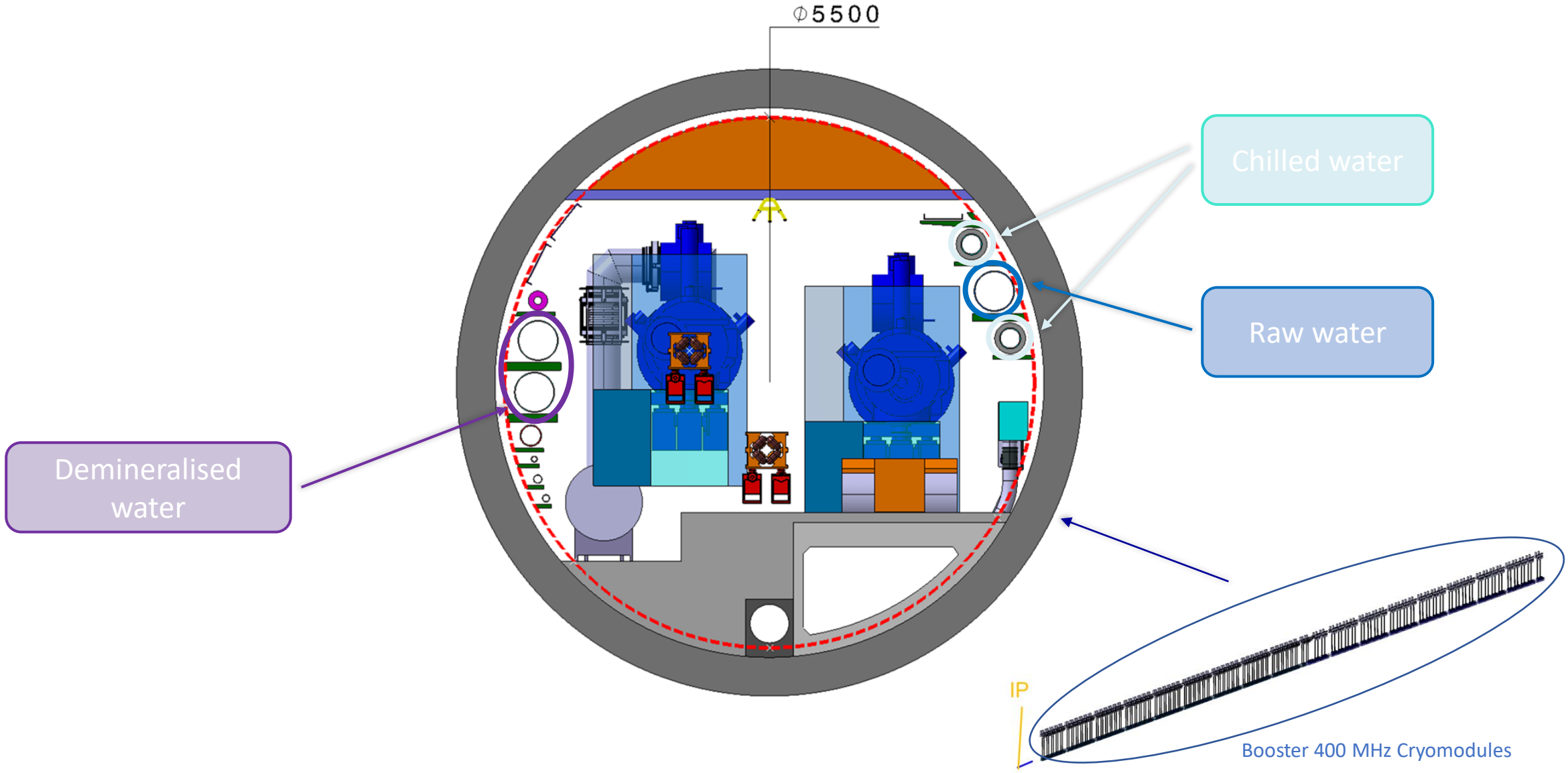

Klystron Gallery, Point L

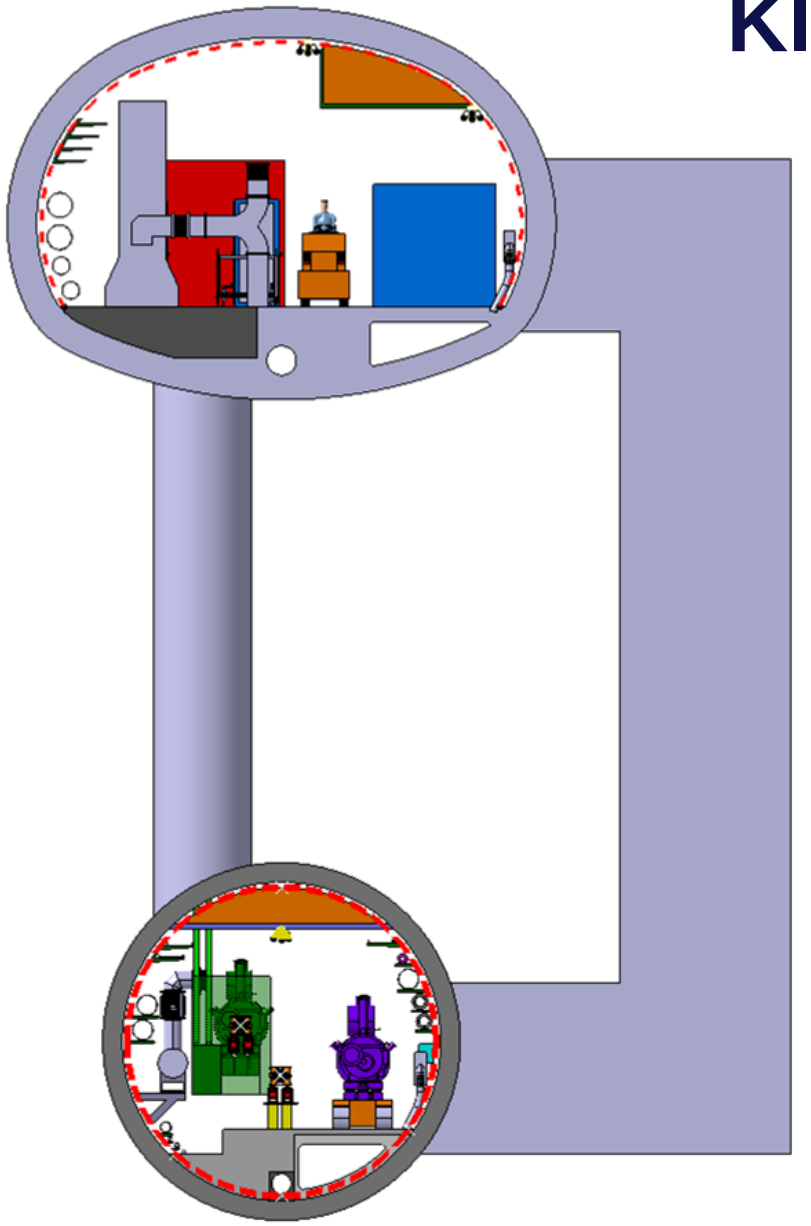

Demineralised water

Chilled water

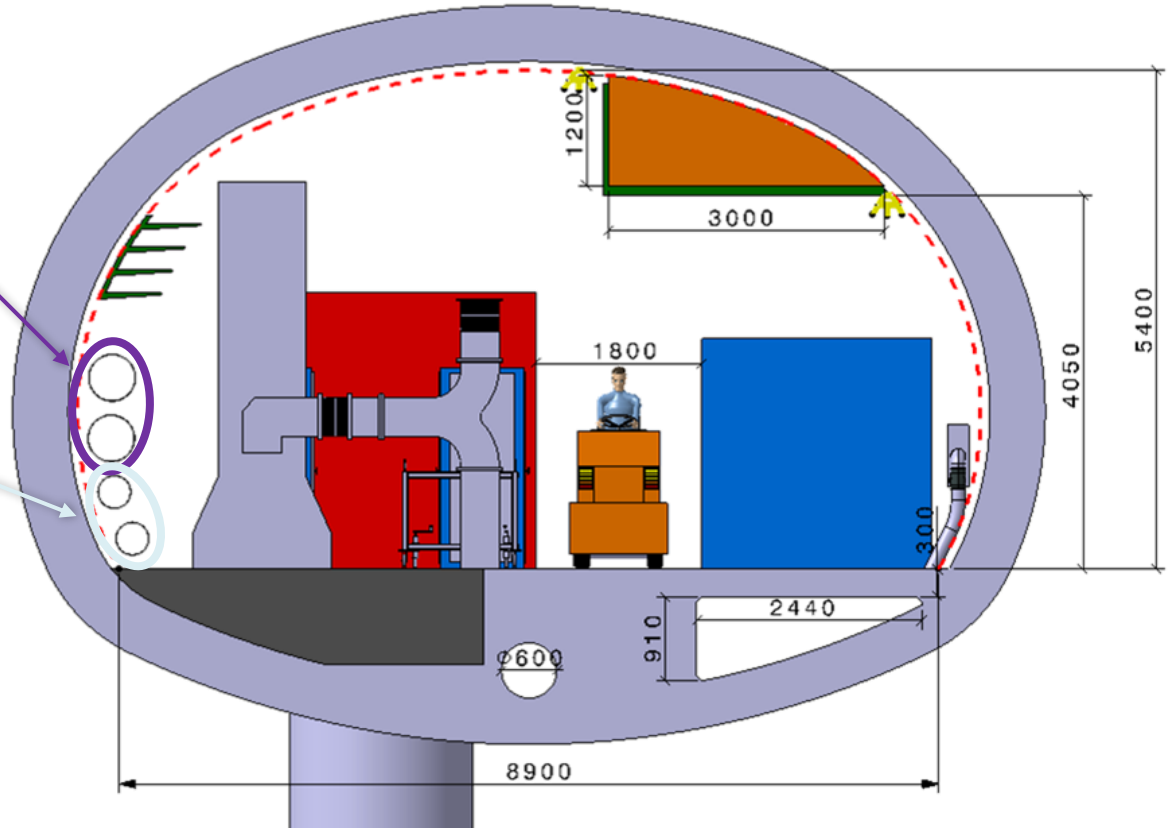

VENTILATION

Heat loads on Air (kW)

POINT	Cryogenics	Power Converters	General Services	Experimental Areas	Shaft pressurisation	Fresh air for underground areas	TOTAL TO CHILLED WATER
A			500	50	300	150	**1000**
B			500		150	50	**700**
D			500	40	300	150	**990**
F			500		150	50	**700**
G			500	50	300	150	**1000**
H	2,000*	2,250*	500		150	150	**800**
J			500	40	300	150	**990**
L	500*	35*	500		150	150	**800**

Surface

*Extracted without chilled water

Underground

POINT	Cryogenics	RF	Experimental Areas	Power Converters	Ventilation UW	TOTAL
A			50	220	200	**470**
B				220		**220**
D			40	220	200	**460**
F				220		**220**
G			50	220	200	**470**
H	200	4,600		220	200	**5,220**
J			40	220	200	**460**
L	100	75		220	200	**595**

Underground Ventilation Point H, Klystron Gallery

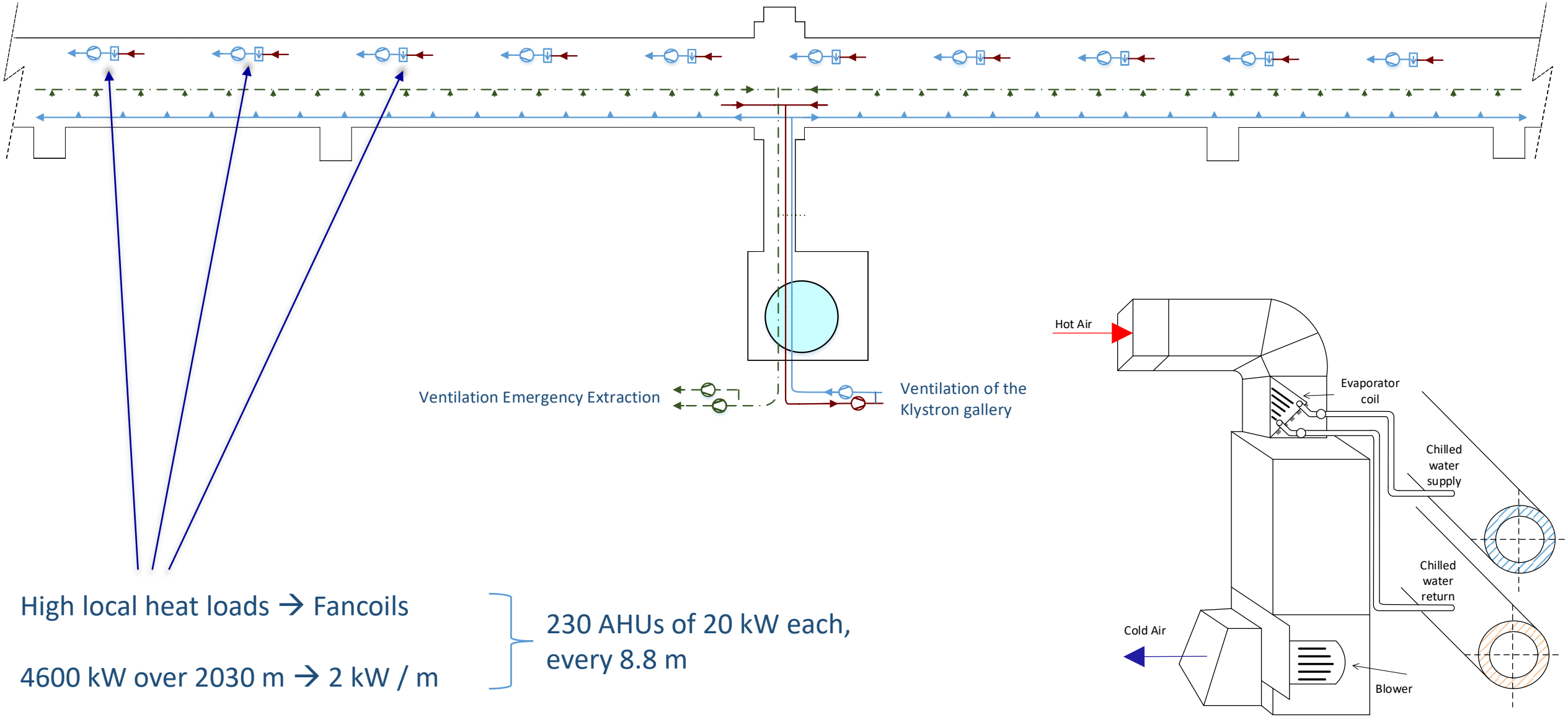

High local heat loads → Fancoils

4600 kW over 2030 m → 2 kW / m

230 AHUs of 20 kW each, every 8.8 m

Underground Ventilation Point H, Tunnel

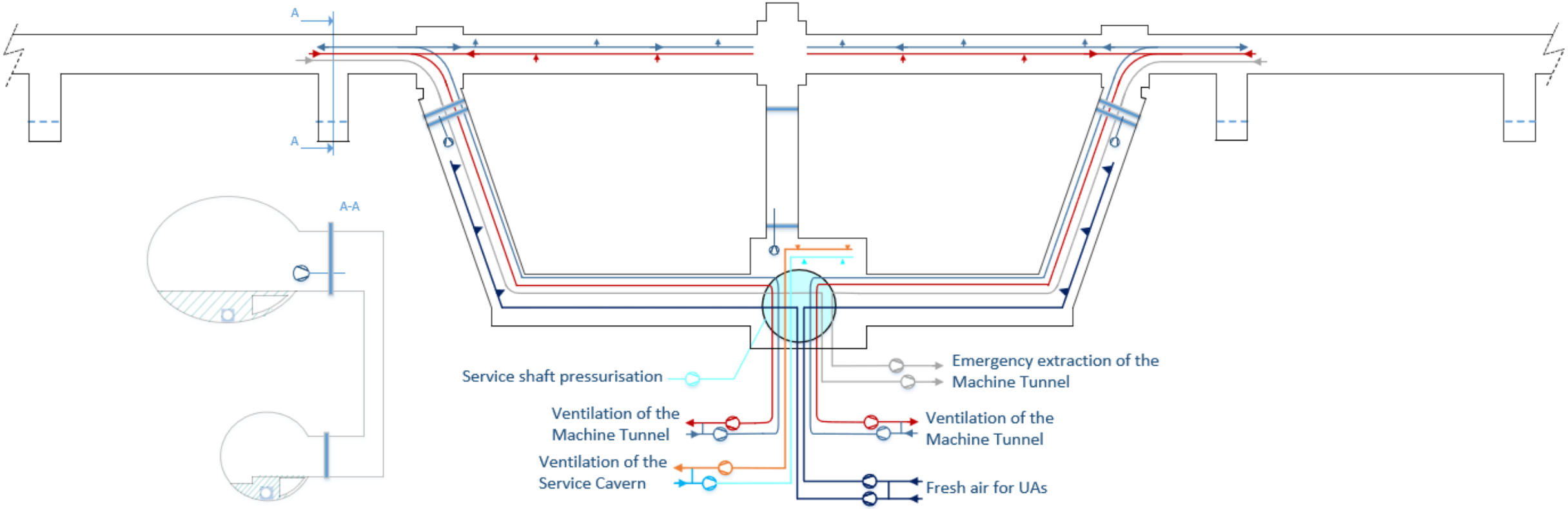

Underground Ventilation Point L, Klystron Gallery

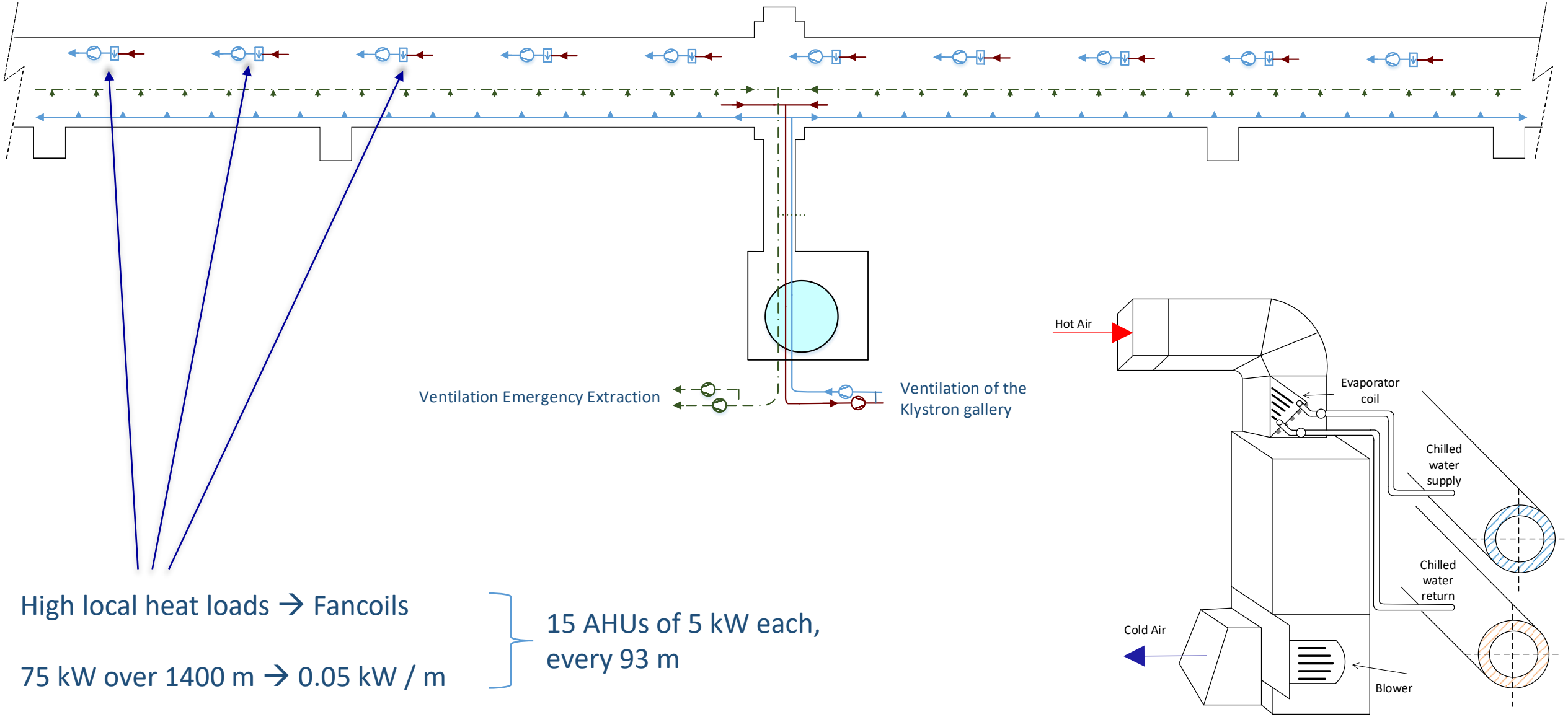

High local heat loads → Fancoils

75 kW over 1400 m → 0.05 kW / m

15 AHUs of 5 kW each, every 93 m

Underground Ventilation Point L, Tunnel

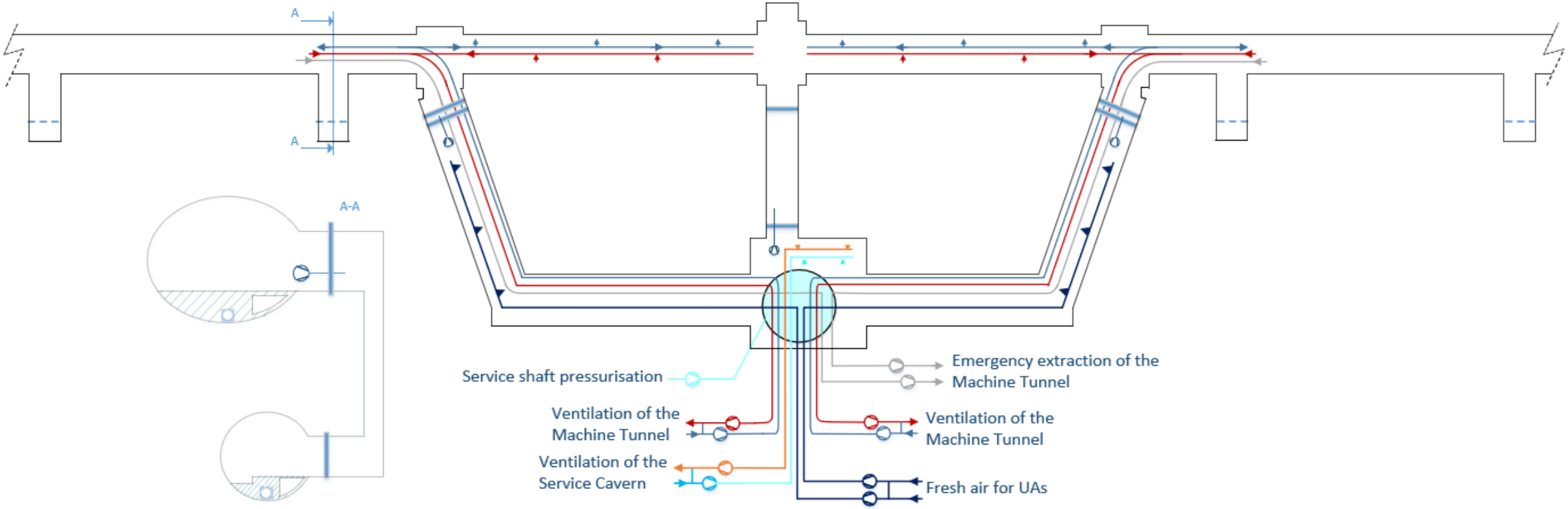

Ventilation modes, Klystron Gallery

Access mode

Emergency extraction duct closed

Temperature: Between 18 ºC and 26 ºC

Compartment doors opened

2080 m³/h per compartment

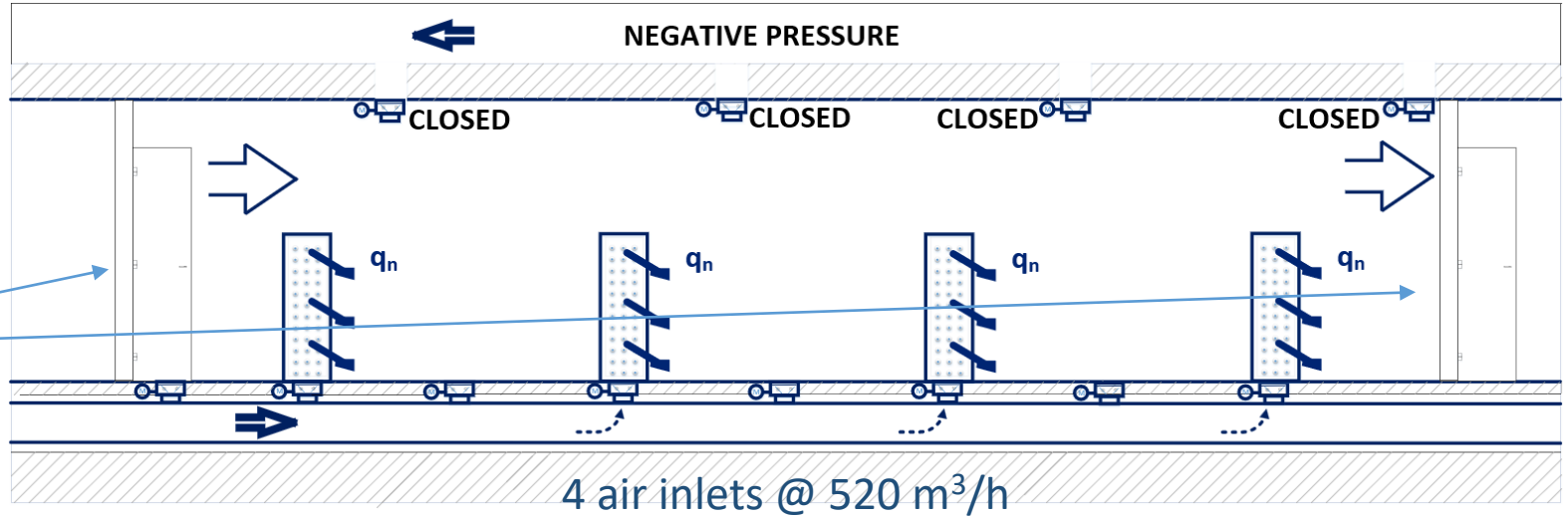

Emergency mode

Emergency extraction duct opened

Compartment doors closed

10000 m³/h per affected compartment

3500 m³/h per adjacent compartment

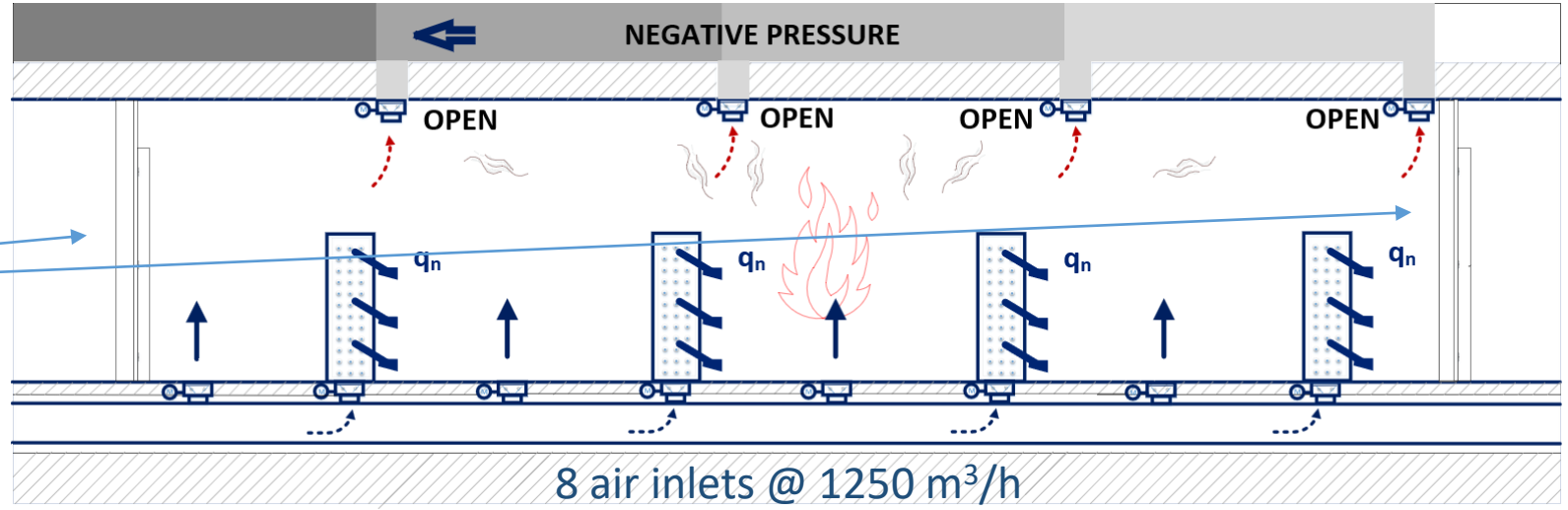

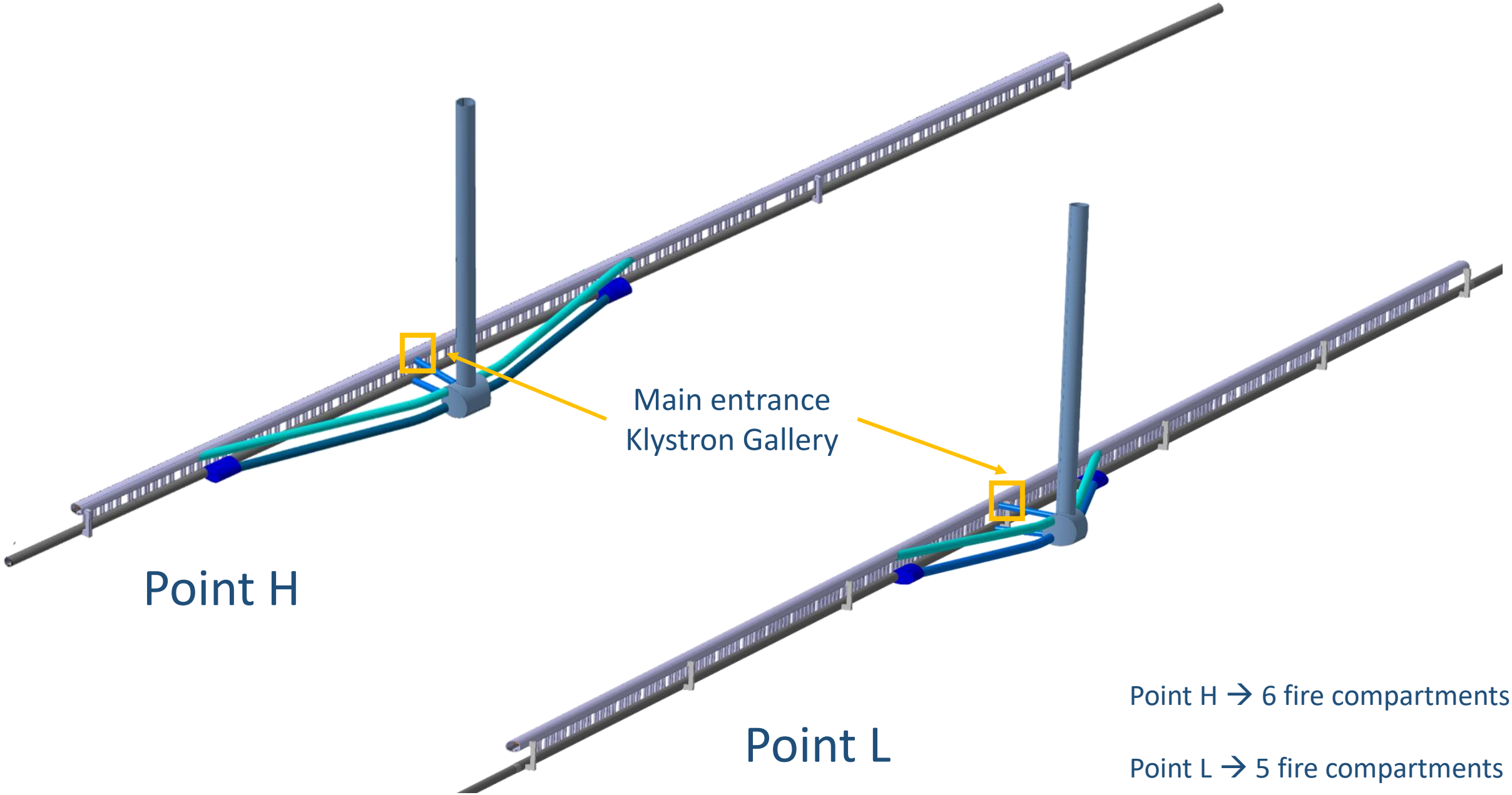

Point H → 6 fire compartments

Point L → 5 fire compartments

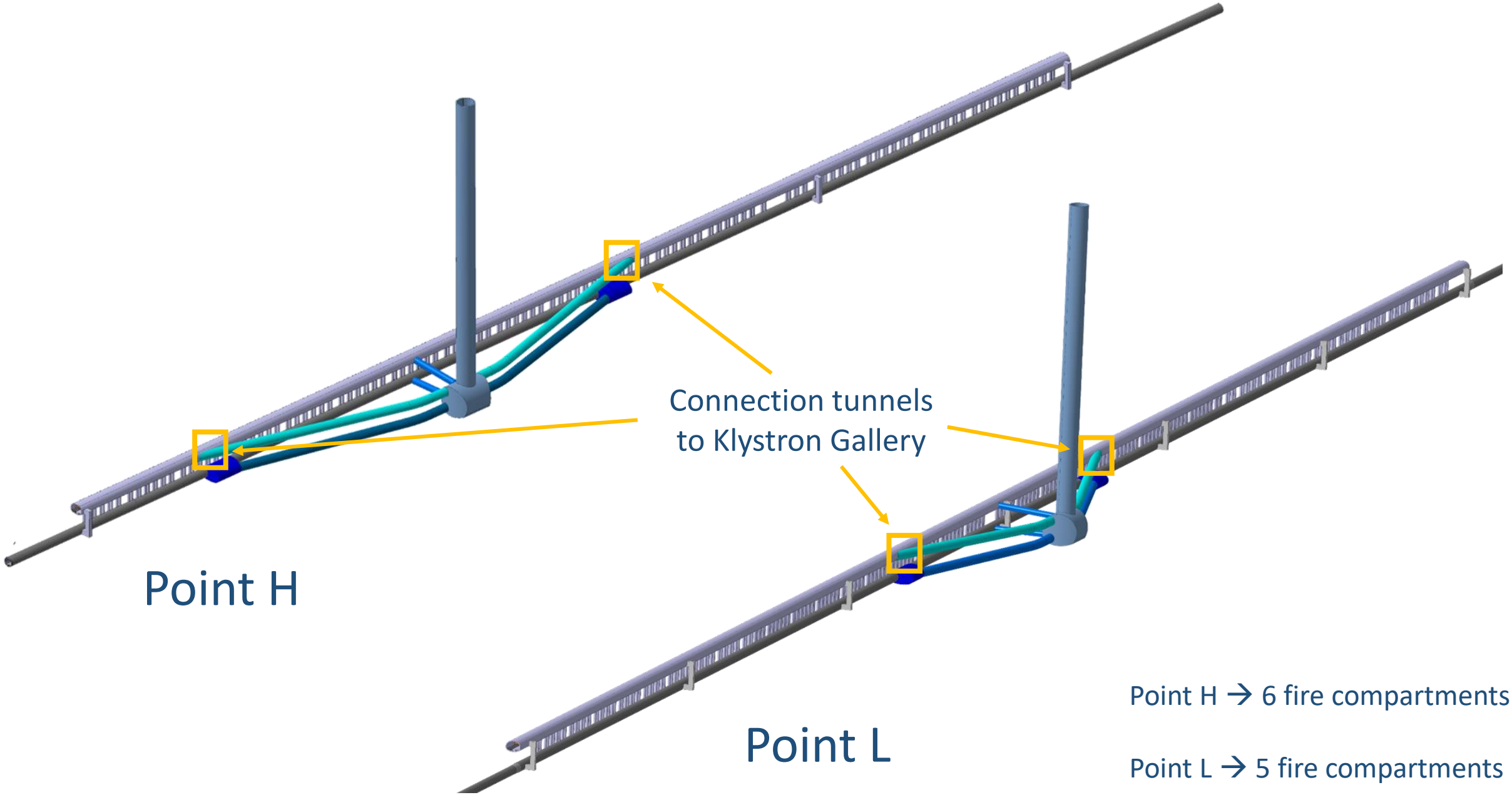

Point H → 6 fire compartments

Point L → 5 fire compartments

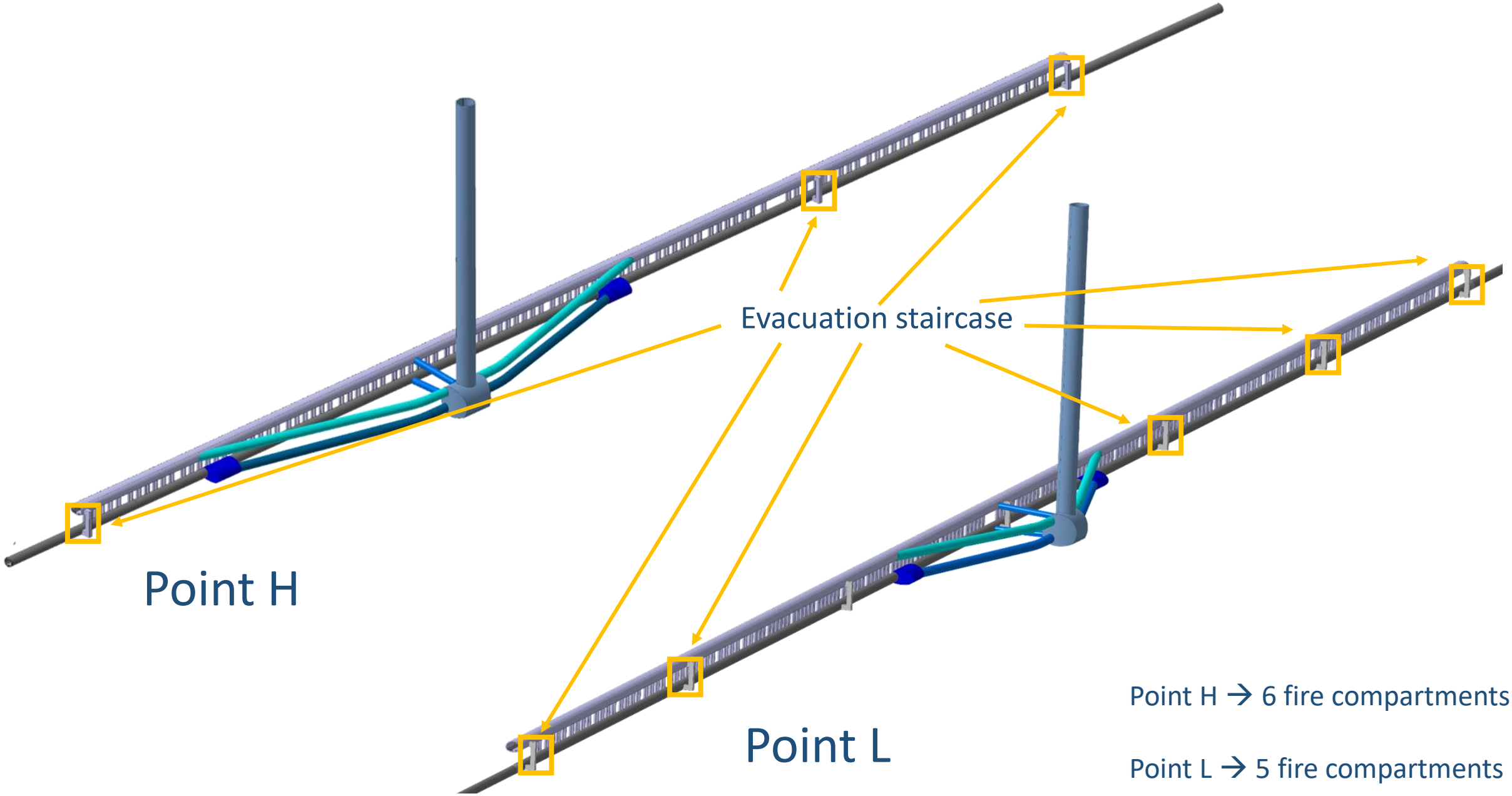

Point H → 6 fire compartments

Point L → 5 fire compartments

Fire emergency in Klystron Gallery, Point H & L

Case 1: Fire in an extremal compartment.

- Not that problematic, as the entrance to Klystron Gallery and connection tunnels are not blocked.

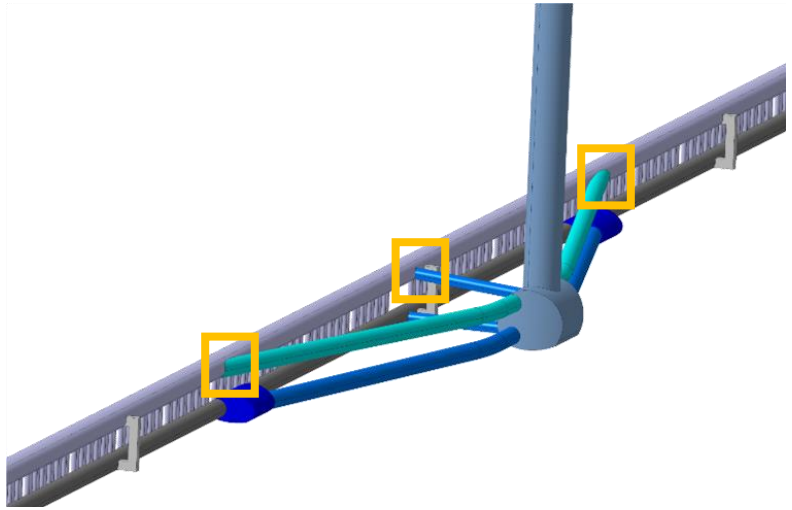

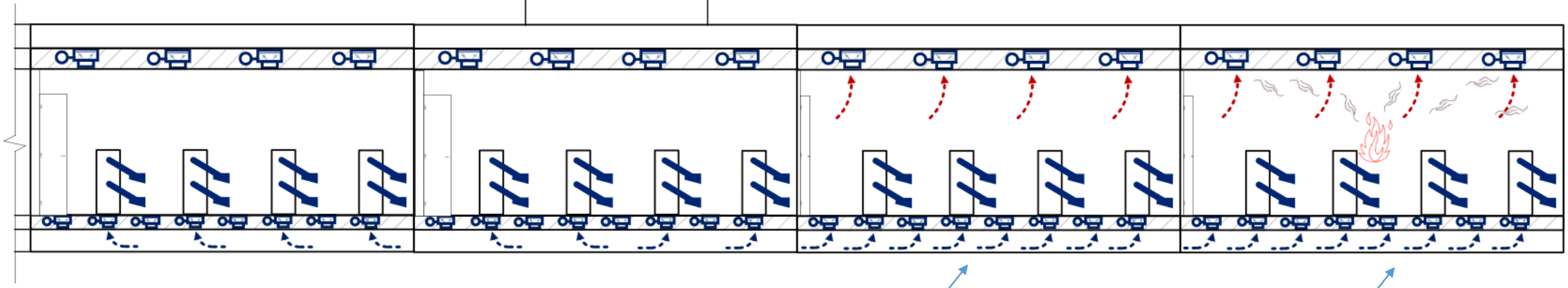

Adjacent compartment

8 air inlets @ 438 m^3/h

Affected compartment

8 air inlets @ 1250 m^3/h

Fire emergency in Klystron Gallery, Point H & L

Case 2: Fire in an intermediate compartment.

- Problematic: evacuation is done through the Klystron Gallery entrance or connection tunnels. If unreachable, evacuation is done through the passages to the Tunnel.

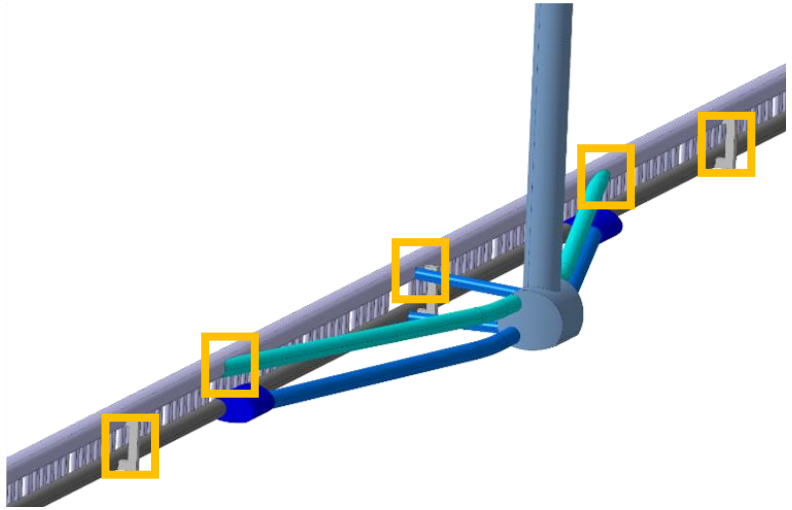

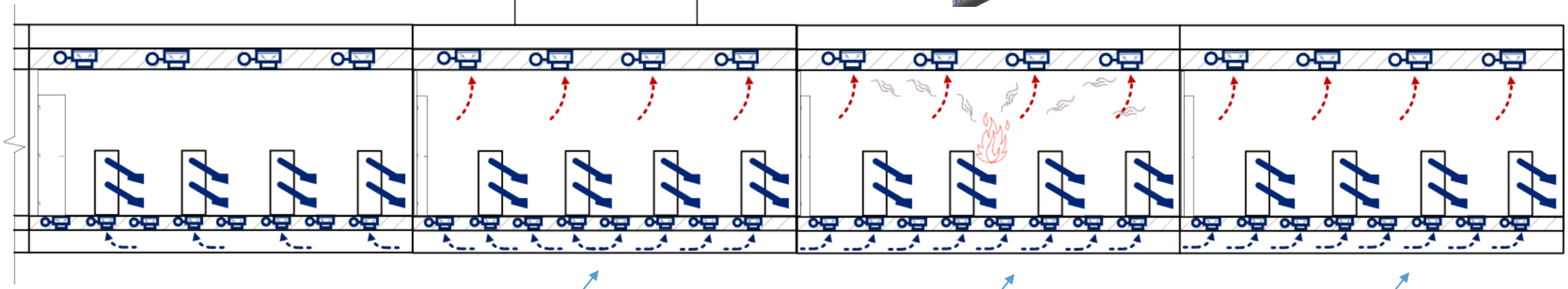

Adjacent compartment
8 air inlets @ 438 m^3/h

Affected compartment
8 air inlets @ 1250 m^3/h

Adjacent compartment
8 air inlets @ 438 m^3/h

Fire emergency in Klystron Gallery, Point H & L

Case 3: Fire in the Klystron Gallery entrance or connection tunnels.

- Problematic: entrance of Klystron Gallery and/or connection tunnels is blocked, so evacuation is done forcefully through the passages to the Tunnel.

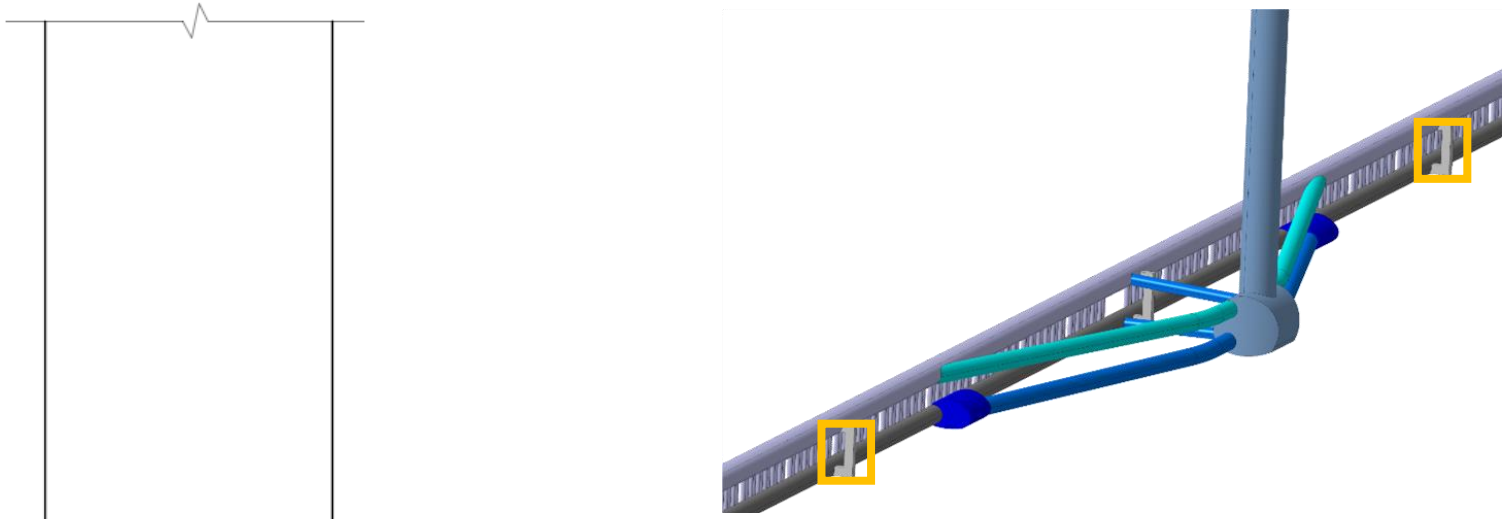

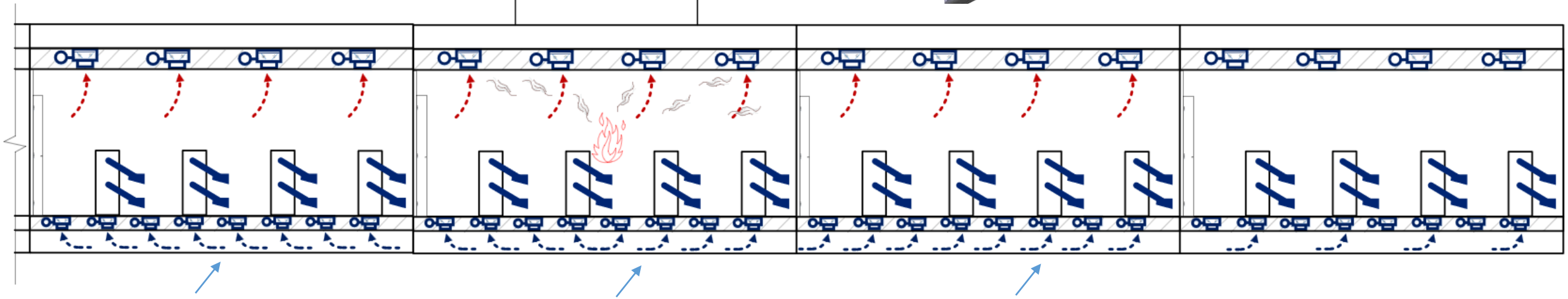

Adjacent compartment

8 air inlets @ 438 m^3/h

Affected compartment

8 air inlets @ 1250 m^3/h

Adjacent compartment

8 air inlets @ 438 m^3/h

Tunnel Sector, Point H

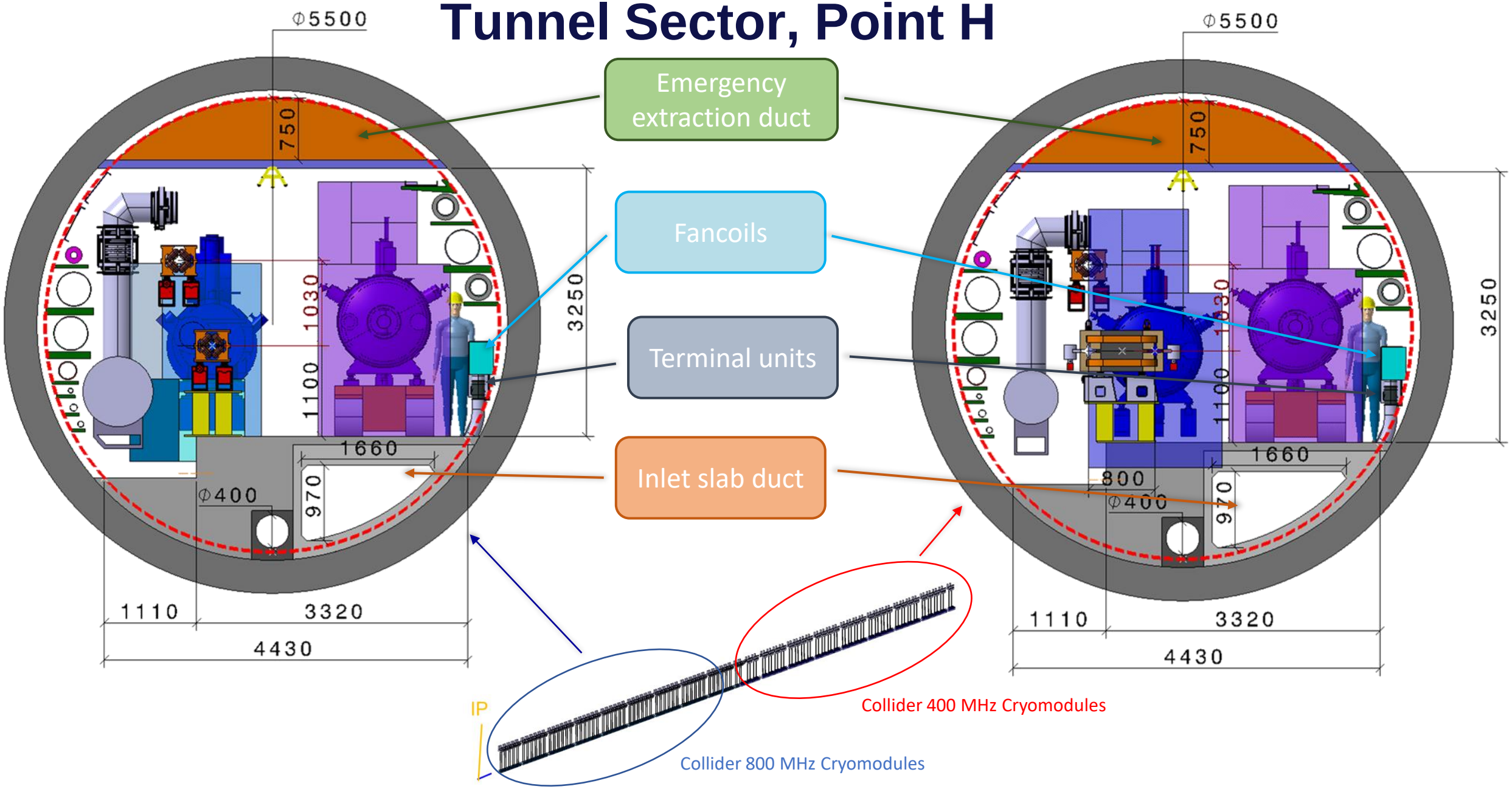

Klystron Gallery, Point H

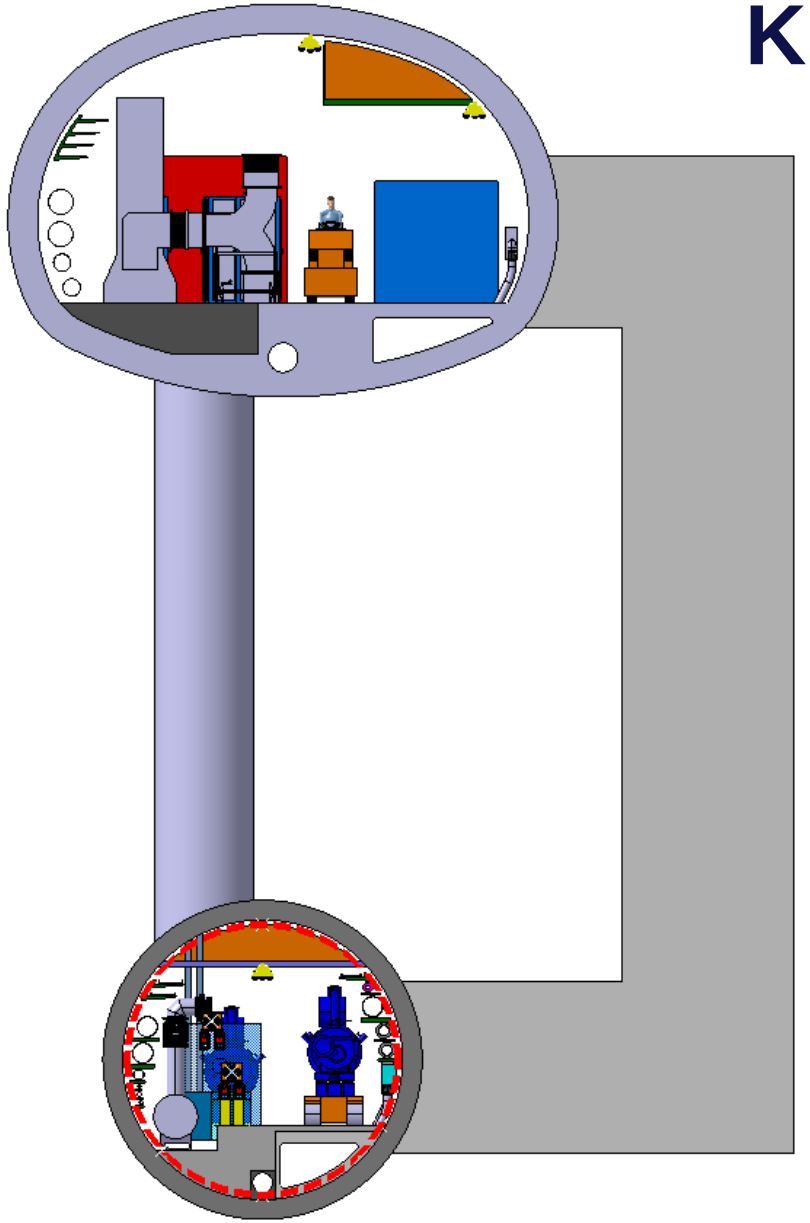

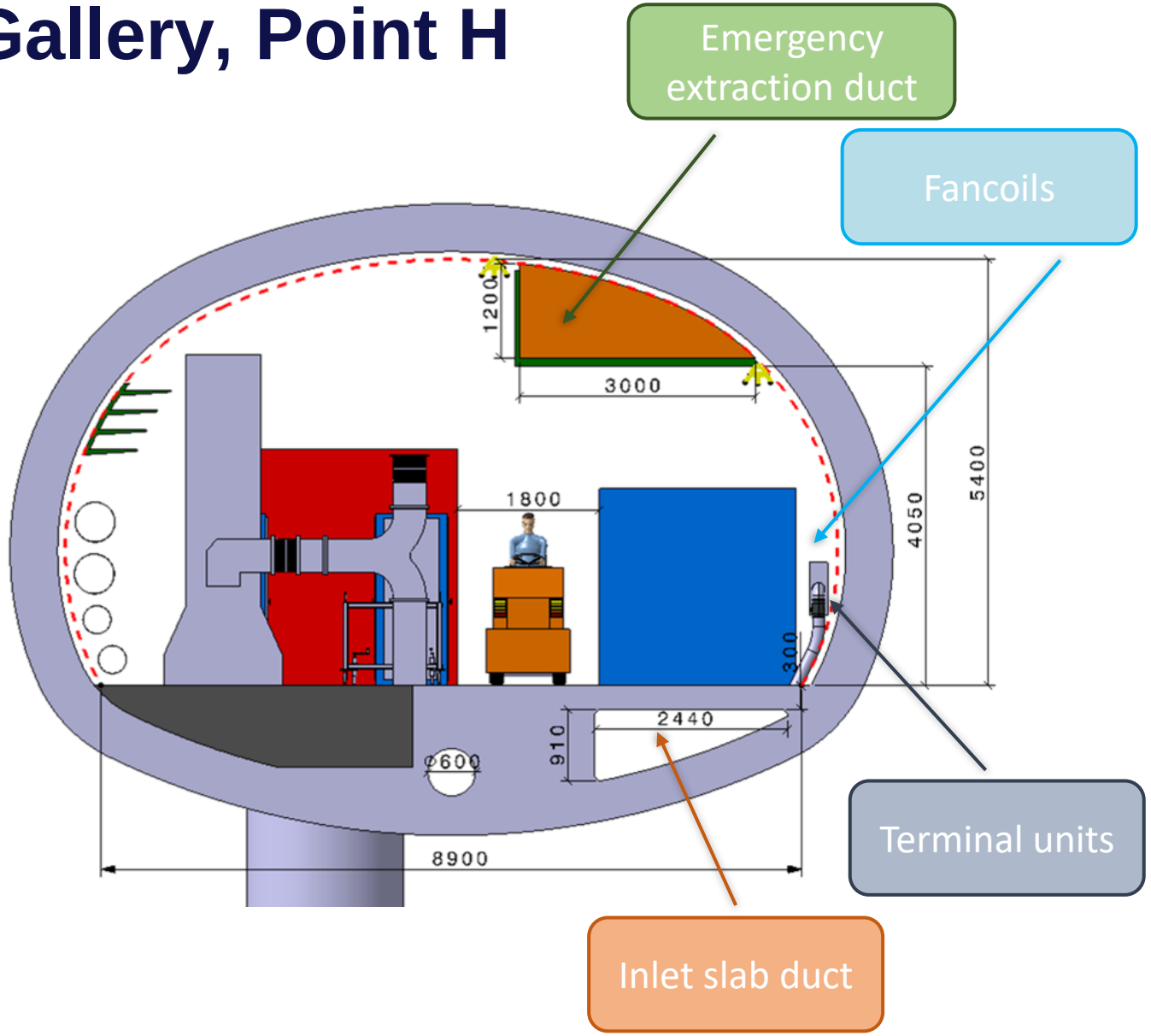

Tunnel Sector, Point L

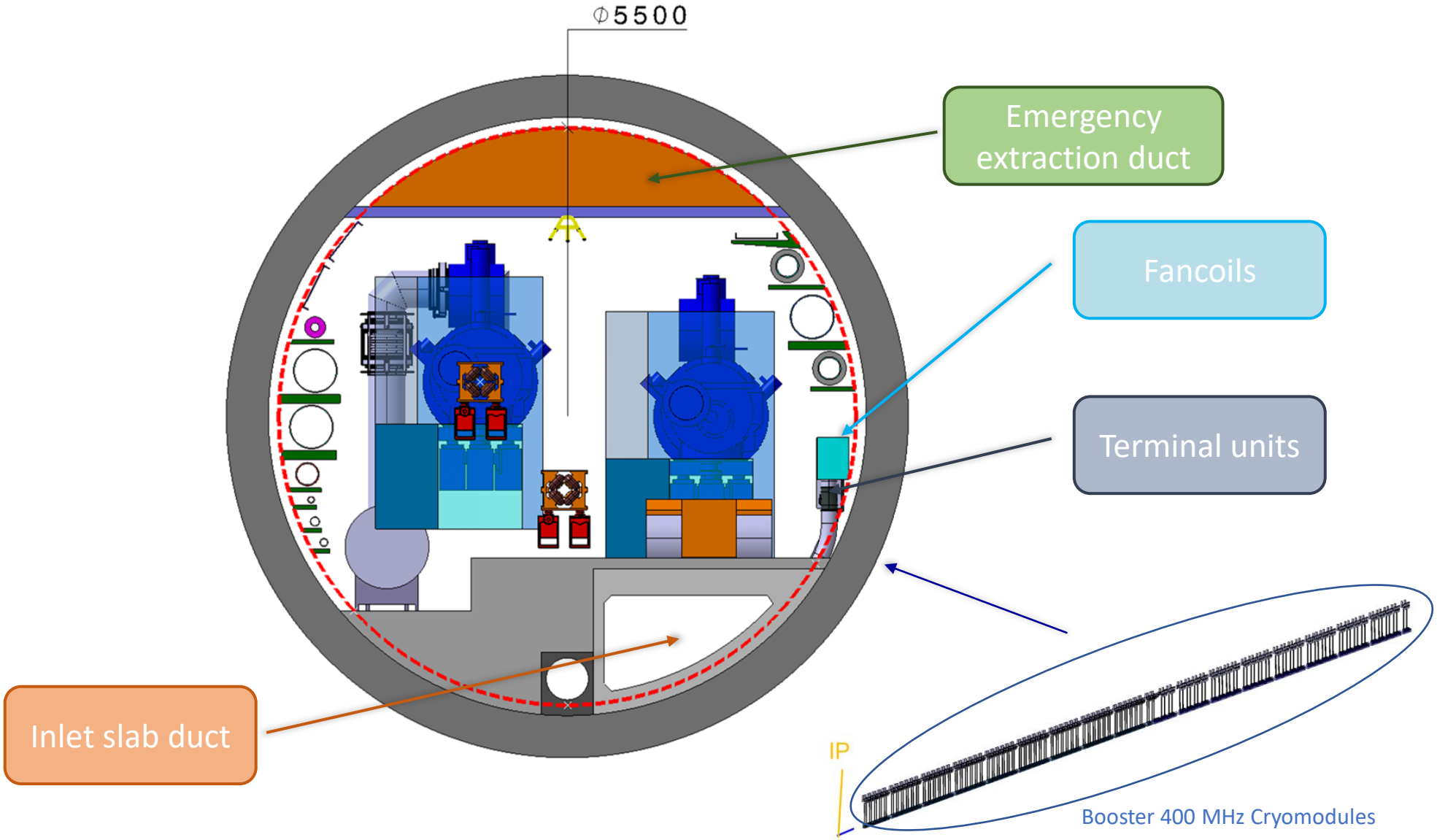

Klystron Gallery, Point L

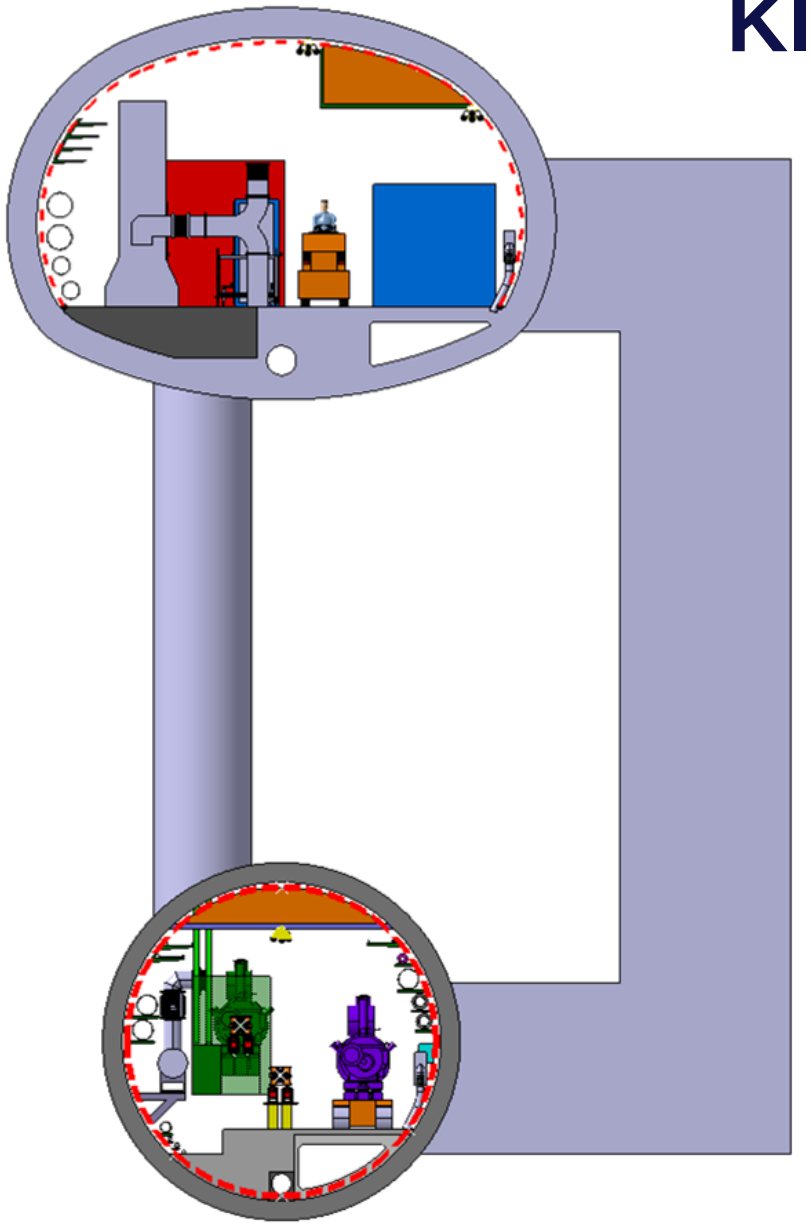

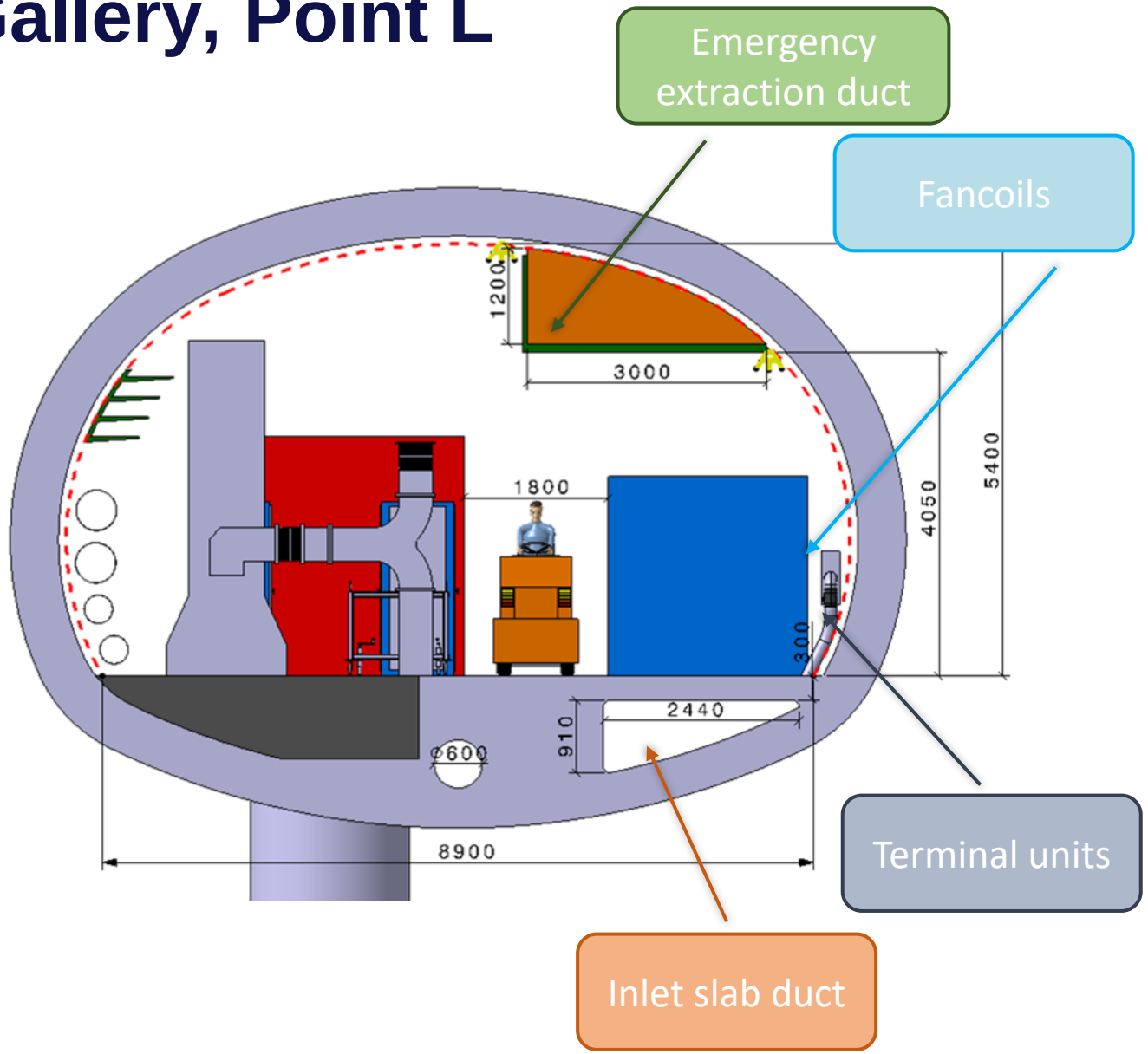

Further Steps

- RF Cooling Requirements for the FCC-ee
  - Reduce environmental impact: waste heat recovery, water reject treatment & optimization of blowdown water.
  - Regular update of the heat load requirements from our clients.
- RF Ventilation
  - Heat recovery through air recycling.
  - Iteration of the fire emergency scenarios.
  - Regular update of the heat load requirements from our clients.

Thank you
for your attention.