Penetrating Particle Analyzer

Development of a Penetrating particle ANalyzer for high-energy radiation measurements in space

Philipp Azzarello on behalf of the PAN consortium

UNIVERSITÉ DE GENÈVE
FACULTÉ DES SCIENCES
Département de physique nucléaire et corpusculaire

Penetrating Particle Analyzer

The Penetrating particle Analyzer

- PAN is a generic instrument technology for deep space and interplanetary missions.
- Capable of precisely measure and monitor in real time the flux, composition, direction of penetrating particles (> ~100 MeV/nucleon)
- Consortium of three institutes:
  - Department of nuclear and particle physics, University of Geneva
  - INFN Perugia
  - Institute of Experimental and Applied Physics, Czech Technical University in Prague

UNIVERSITÉ DE GENÈVE
FACULTÉ DES SCIENCES
Département de physique nucléaire et corpusculaire

INFN PERUGIA

CTU CZECH TECHNICAL UNIVERSITY IN PRAGUE

Penetrating Particle Analyzer

PAN Science goals

- Cosmic ray physics: fill an in situ observation gap of galactic cosmic rays (GCRs) in the GeV region in deep space
  - Understanding of the origin of the GCRs and their interplay with solar activities
  - Antimatter searches
- Solar physics: provide precise information on solar energetic particles
  - Study the physical process of solar events, in particular those producing intensive flux of energetic particles.
- Space weather
  - Improve space weather models from the energetic particle perspective.
- Planetary science: measure and monitor energetic particles
  - Develop a full picture of the radiation environment of a planet/moon, in particular as a potential habitat.
- Deep space travel: penetrating particles are difficult to shield
  - PAN can monitor the flux and composition of penetrating particles during a space voyage.
  - PAN can be part of a standard on-board instrument suitable for radiation monitoring for deep space travel.

Penetrating Particle Analyzer

Measuring GeV protons

- The energy of GeV protons cannot be measured by the ΔE – E method as used for low E protons.
  - 170 cm of Si needed to stop 1 GeV protons
  - The nuclear interaction length in Si is 46.52 cm, thus with 170 cm of Si, it is likely to produce a hadronic shower before losing all the energy by dE/dx
  - A calorimeter is too thick/heavy and has bad resolution (~30-40%)
- The solution is to use a magnetic spectrometer
  - Measure the bending of charged particles in the B-field ⇒ rigidity (p/Z)
  - Then infer the momentum and energy with independently measured particle charge Z

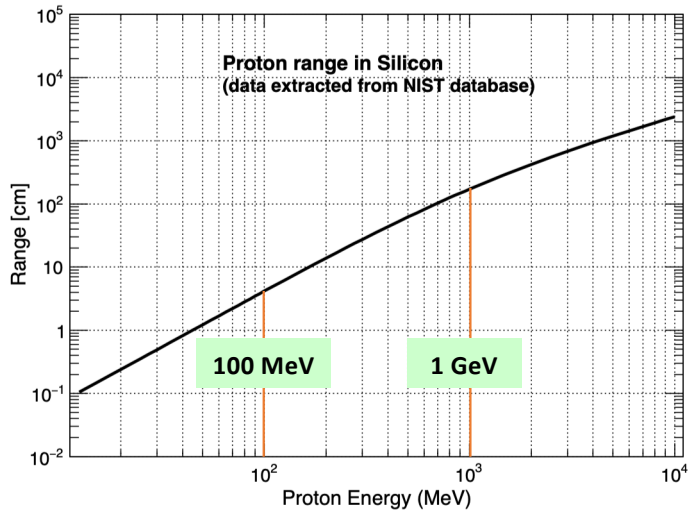

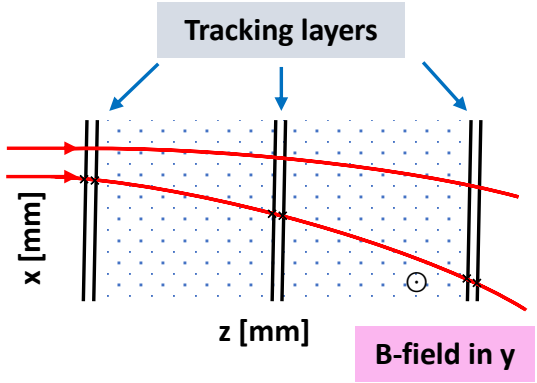

Penetrating Particle Analyzer

The PAN instrument

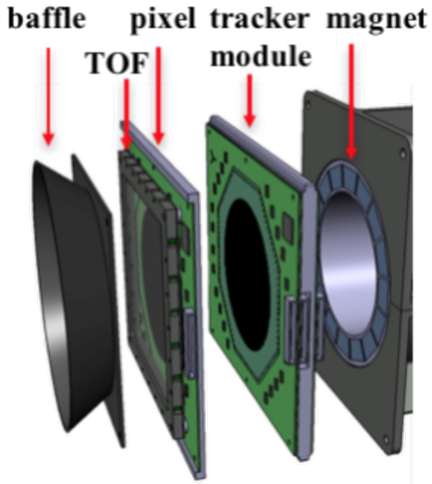

- 4 Halbach permanent magnet sectors (⌀= 10 cm, L = 10 cm) →dipole magnetic field of ~0.2 Tesla
- Light (< 20 kg)
- Low power (< 20 W)
- Symmetric: measure particles coming in from both ends

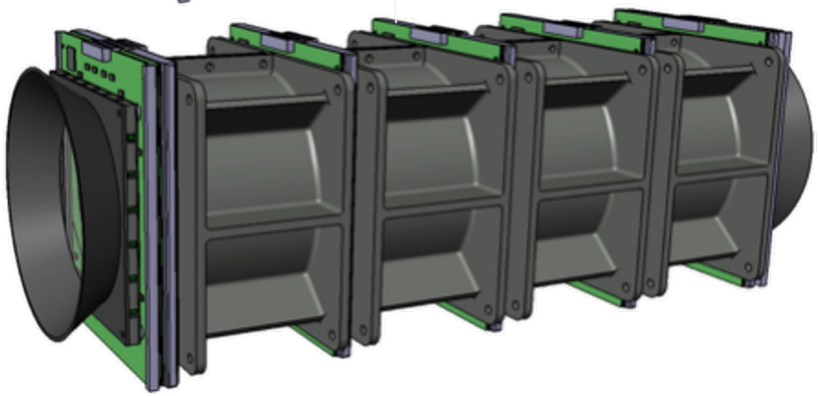

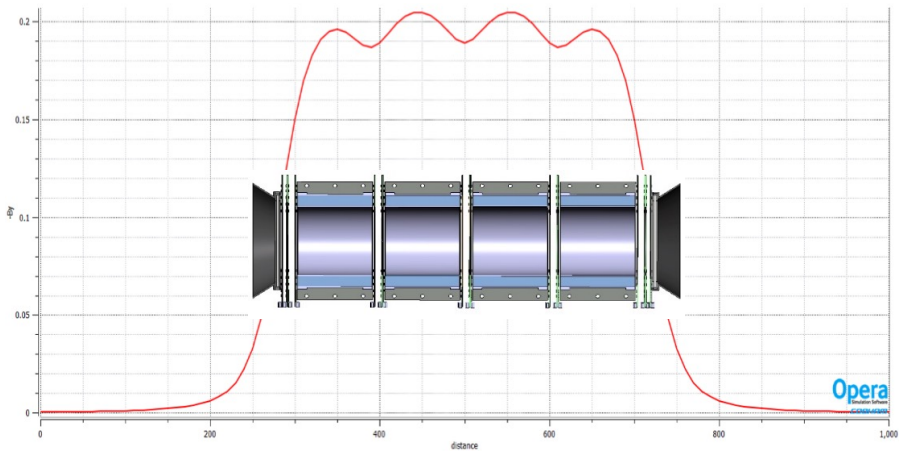

Penetrating Particle Analyzer

Expected performance: energy resolution

- <10% for protons of 0.4 – 20 GeV for 4-sector acceptance
- <20% for protons of 0.2 – 2 GeV for 1-sector acceptance

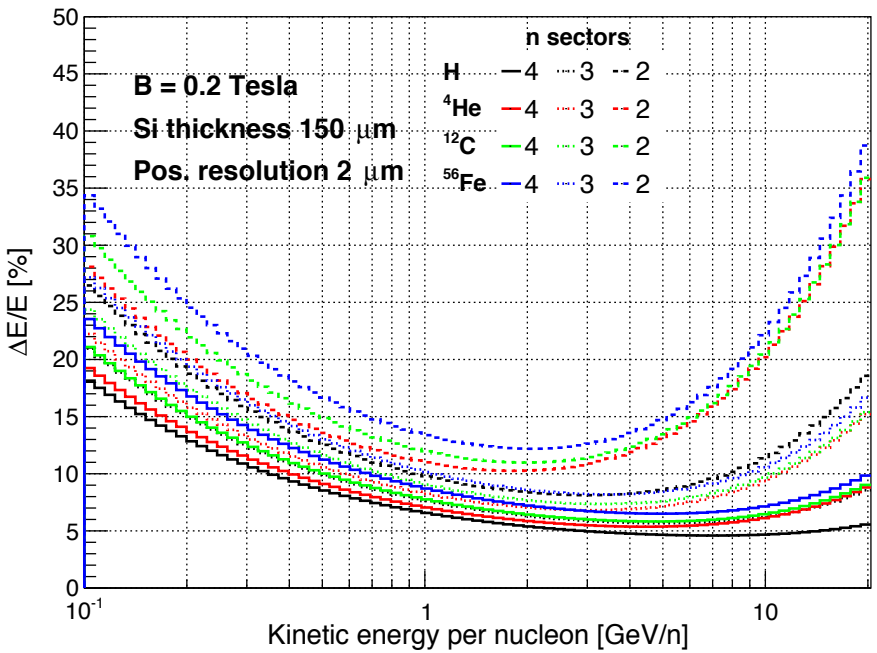

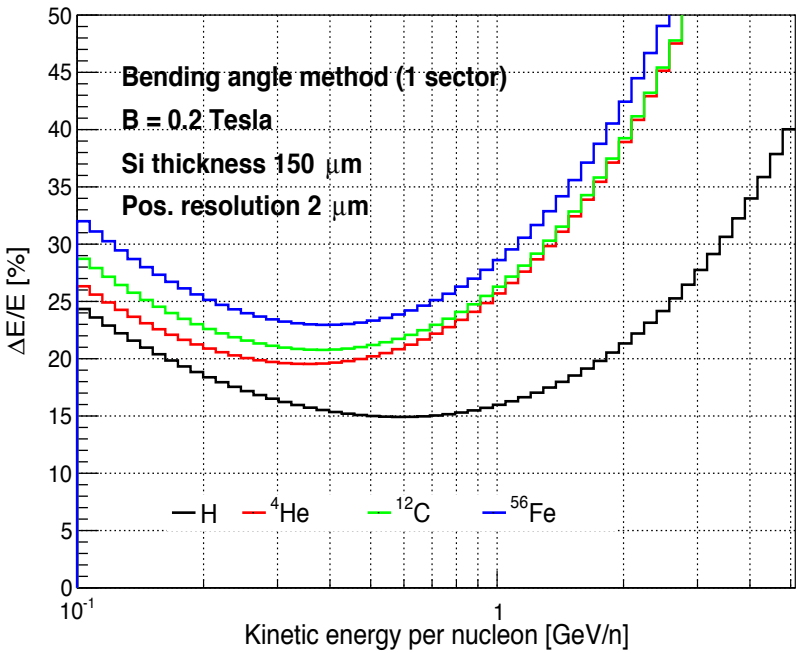

Penetrating Particle Analyzer

The Mini.PAN project

Horizon 2020
European Union Funding
for Research & Innovation

- Funded by the EU H2020 FETOPEN program to develop a demonstrator (Mini.PAN) in 3+1 years (2020-2023)
- Suitable for space weather and planetary applications
- 2 Sectors with smaller dimensions with the same instrumentation (ToF, pixel, tracker)
- The shorter sector length (5 cm) is compensated by a stronger magnetic field.
- It is a demonstrator for the PAN technology.

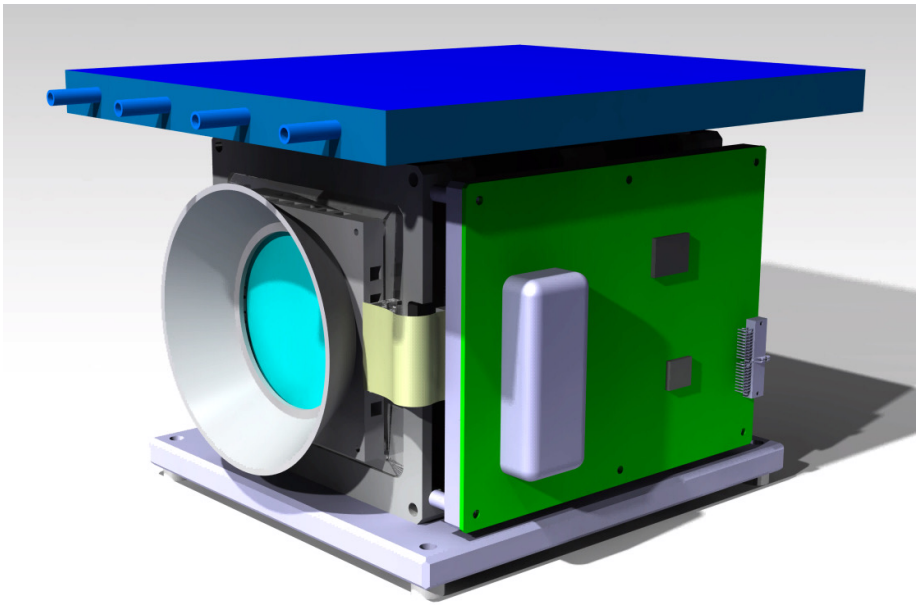

This project has received funding from the European Union's Horizon 2020 research and innovation programme under grant agreement No 862044.

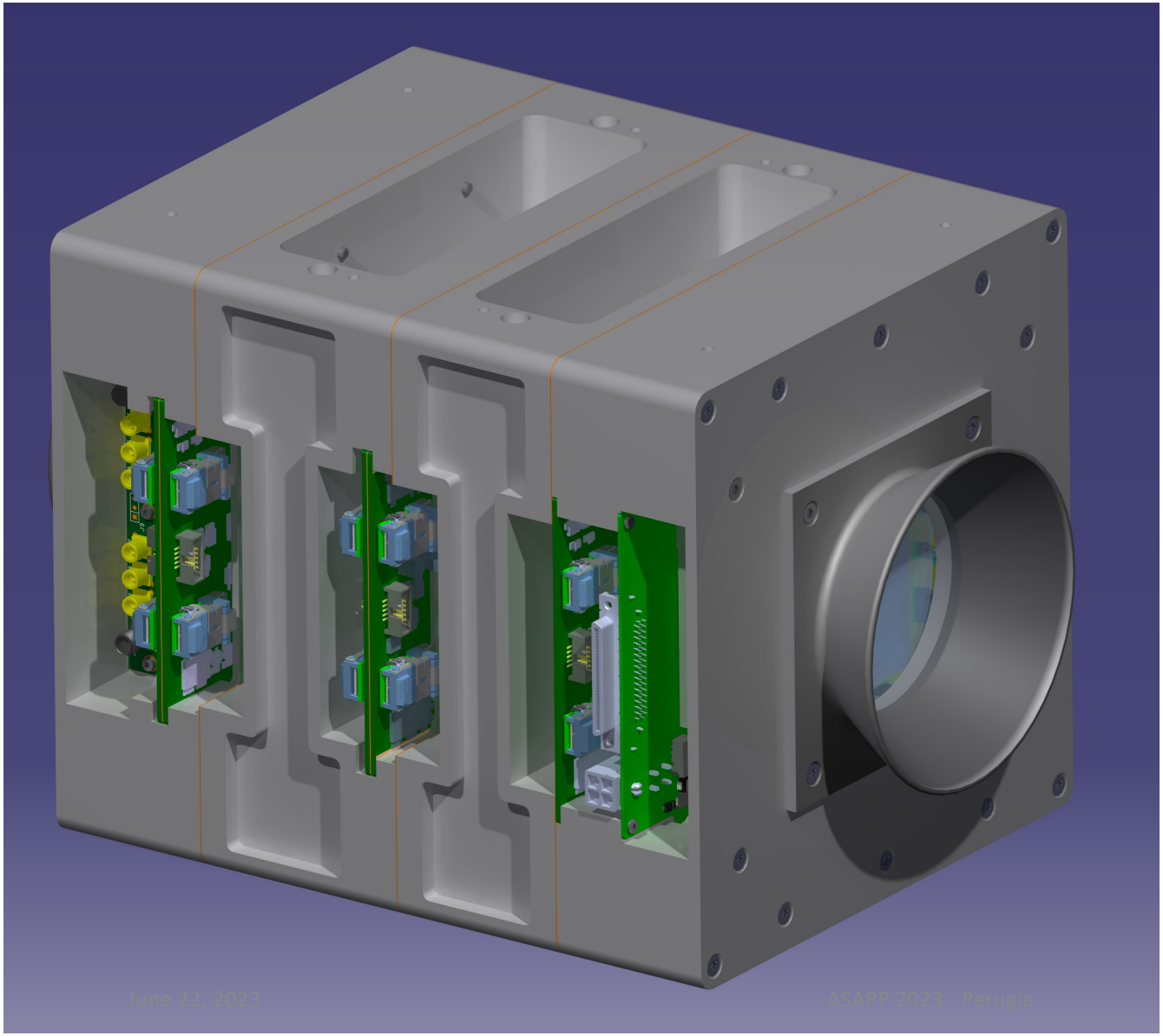

Penetrating Particle Analyzer

The mini.PAN instrument

- Weight: ~ 10 kg
- Power Consumption (no readout): ~ 14.5 W
- Symmetric design which allows to measure particles coming from both sides.
- 200 mm x 165 mm x 165 mm

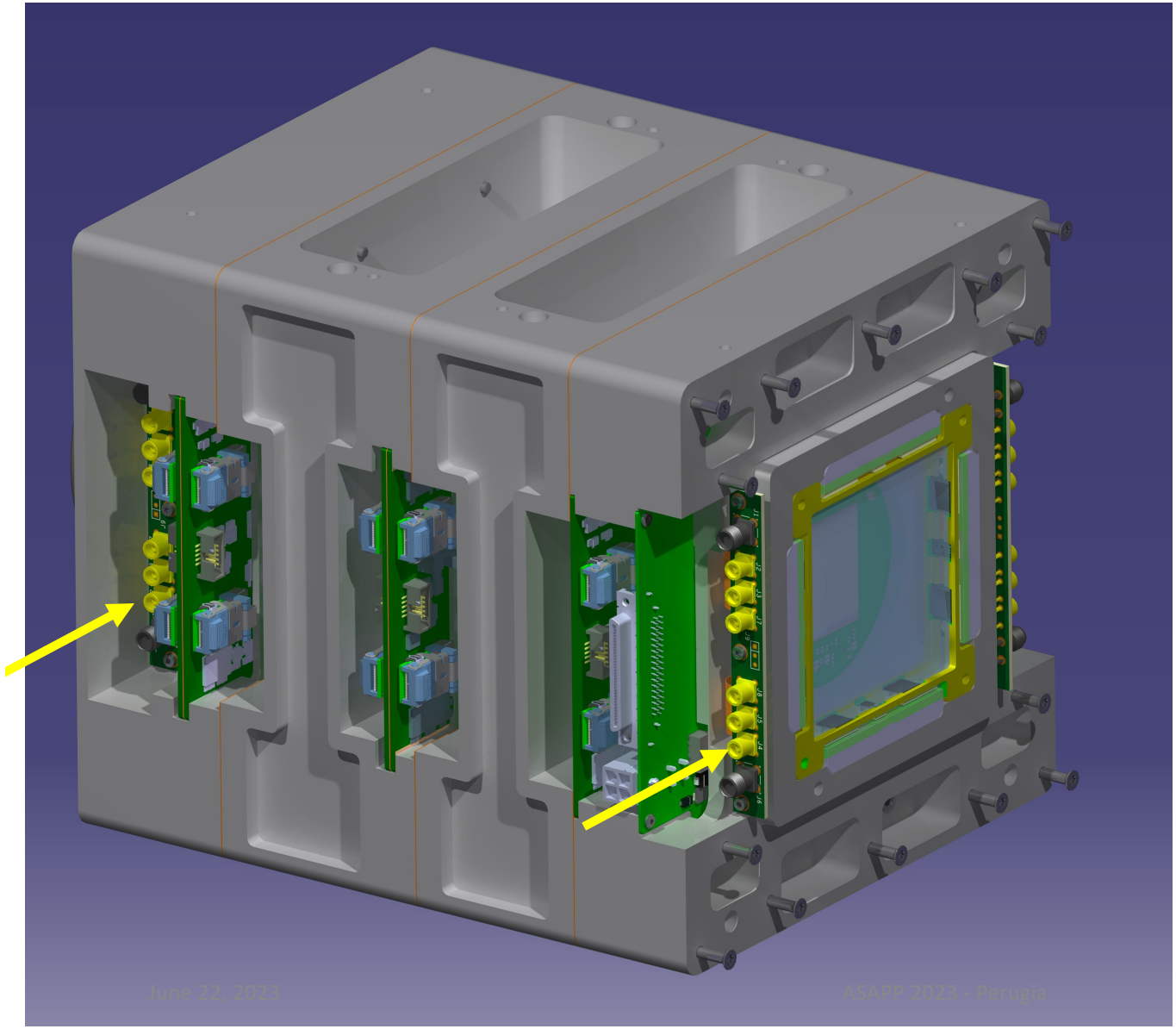

Penetrating Particle Analyzer

- Two TOF modules
  - Trigger, particle counter
  - Charge and time measurement

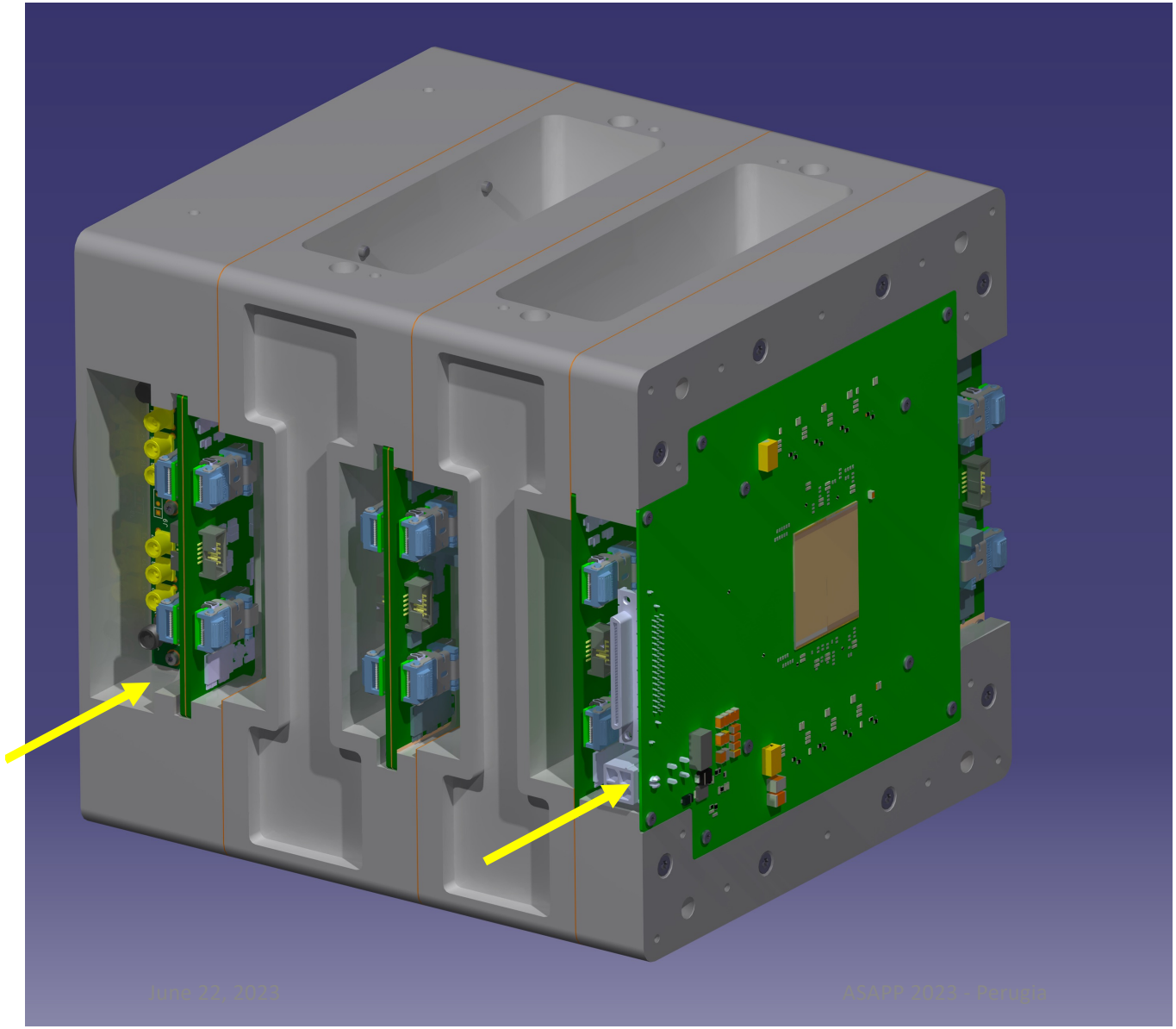

Penetrating Particle Analyzer

- Two pixel detector modules
  - Avoid measurement degradation for high rate solar events
  - Charge and 3D point measurement

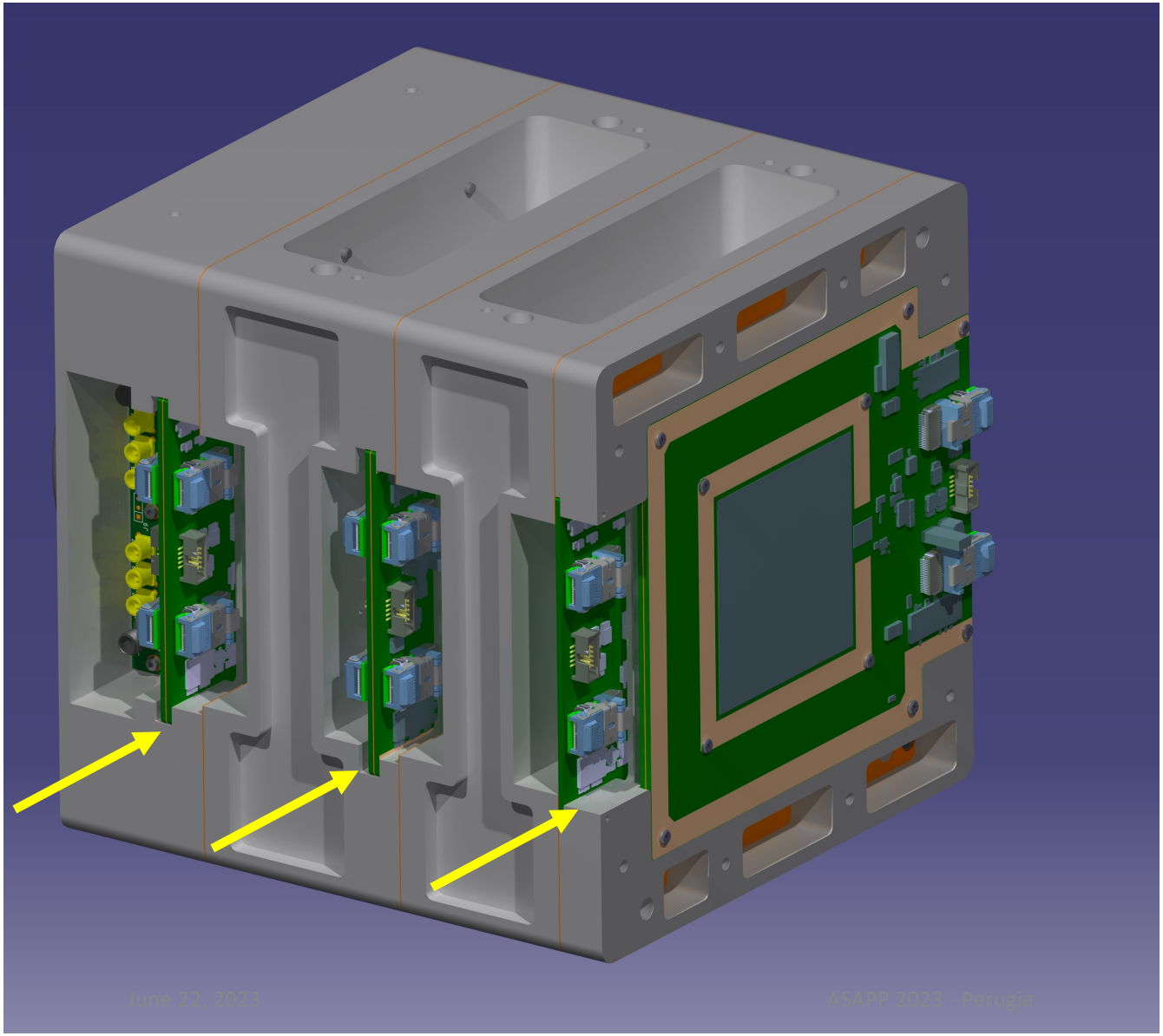

Penetrating Particle Analyzer

- Three tracker modules
  - 2 x StripX: Measure bending radius and angle
  - 1 x StripY: Measure position and time stamp
  - Charge measurement

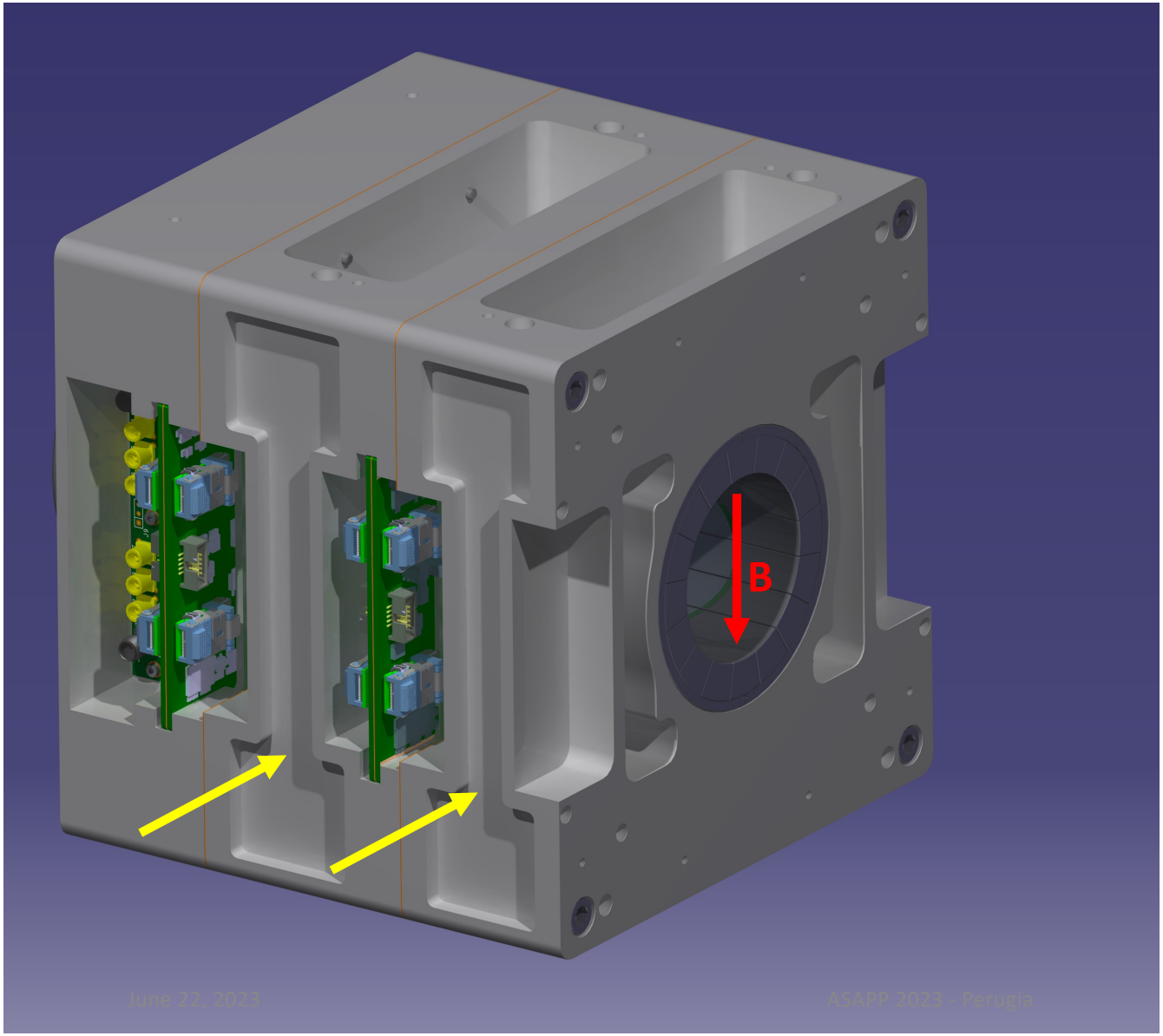

Penetrating Particle Analyzer

- 2 magnets
  - ⌀ = 5 cm, L = 5 cm
- Field aligned with the tracker detectors

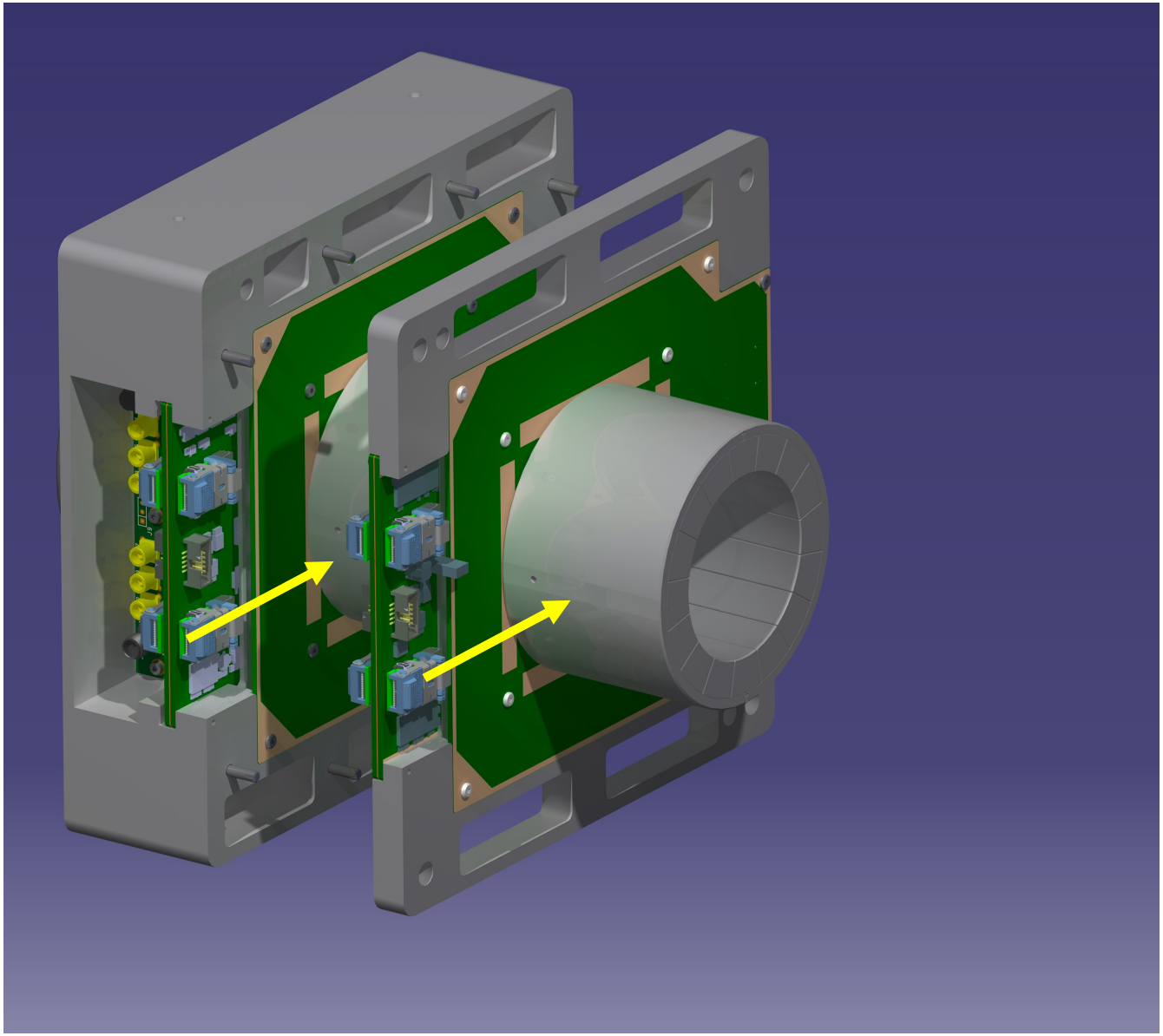

Penetrating Particle Analyzer

- 2 magnets
  - ⌀ = 5 cm, L = 5 cm
- Distance between the magnets: 12 mm

Penetrating Particle Analyzer

The real mini.PAN instrument

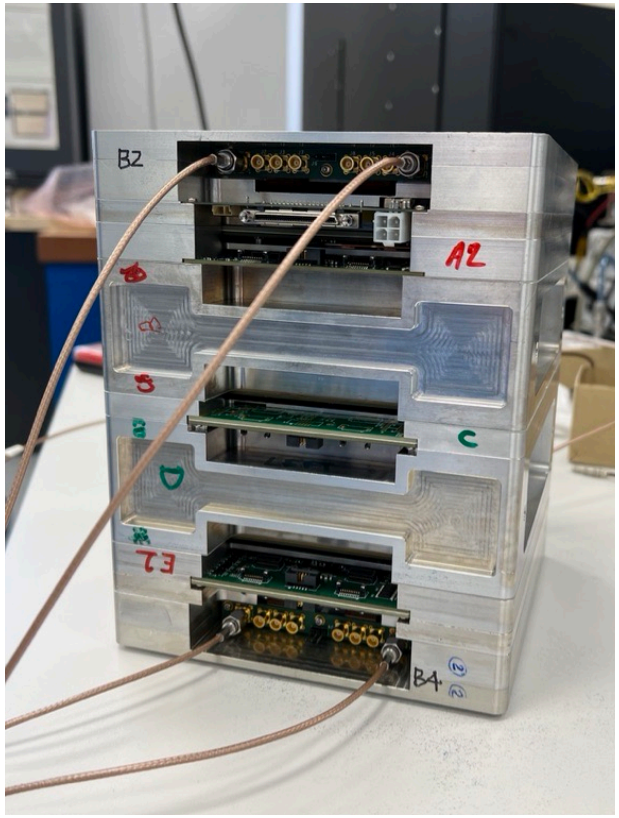

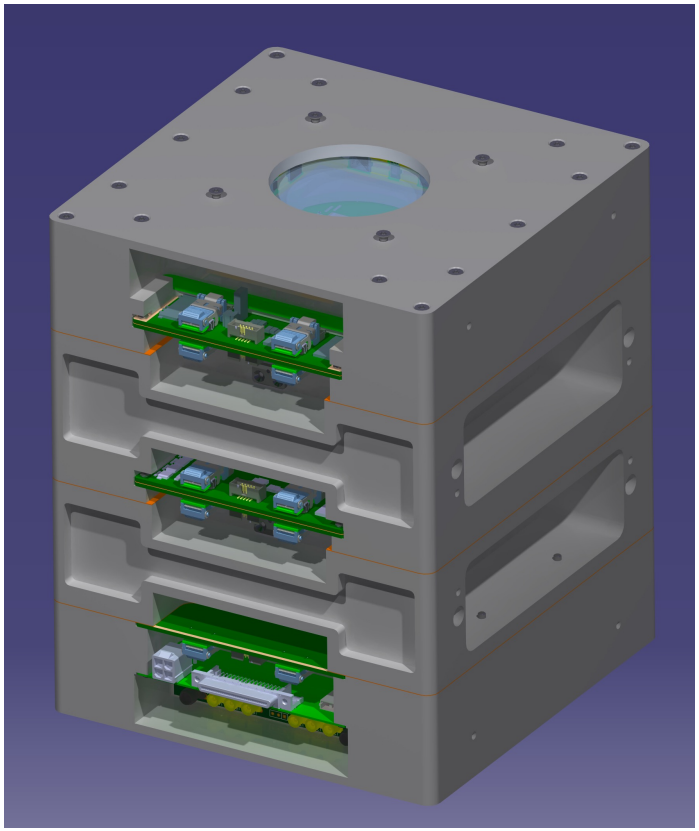

Penetrating Particle Analyzer

Mini-PAN Expected Performance

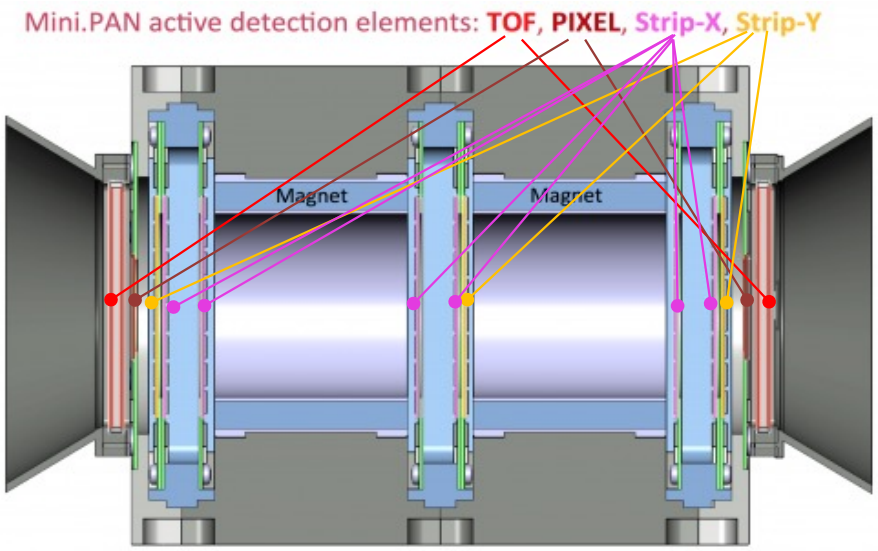

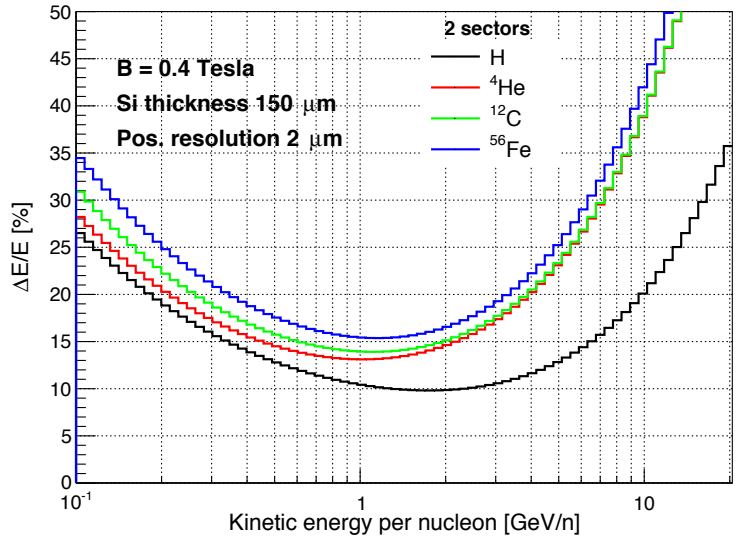

Penetrating Particle Analyzer

Magnets sectors

- 16-block Halbach array
  - Blocks of NdFeB
- Weight: 0.8 kg
- Central field 0.4 T

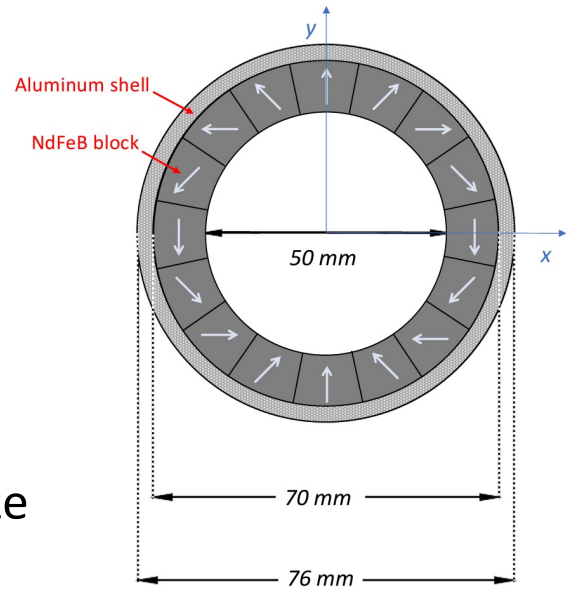

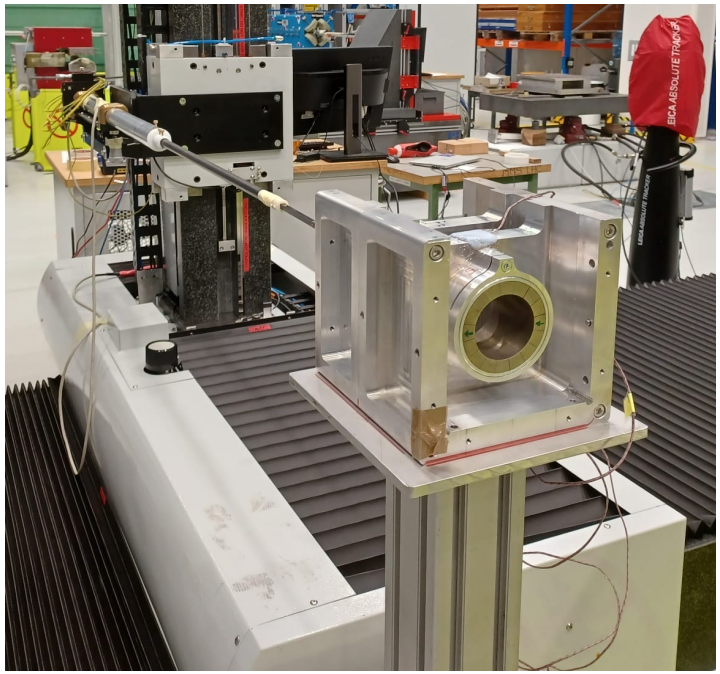

MiniPAN magnet at the 3D mapper, CERN Magnetic Measurements Lab

- In total 5 magnets have been produced by Vacuumschmelze
- Magnet design and tests: P. Thonet, C. Petrone, M. Liebsch, and G. Deferne - (CERN)

Penetrating Particle Analyzer

TOF module

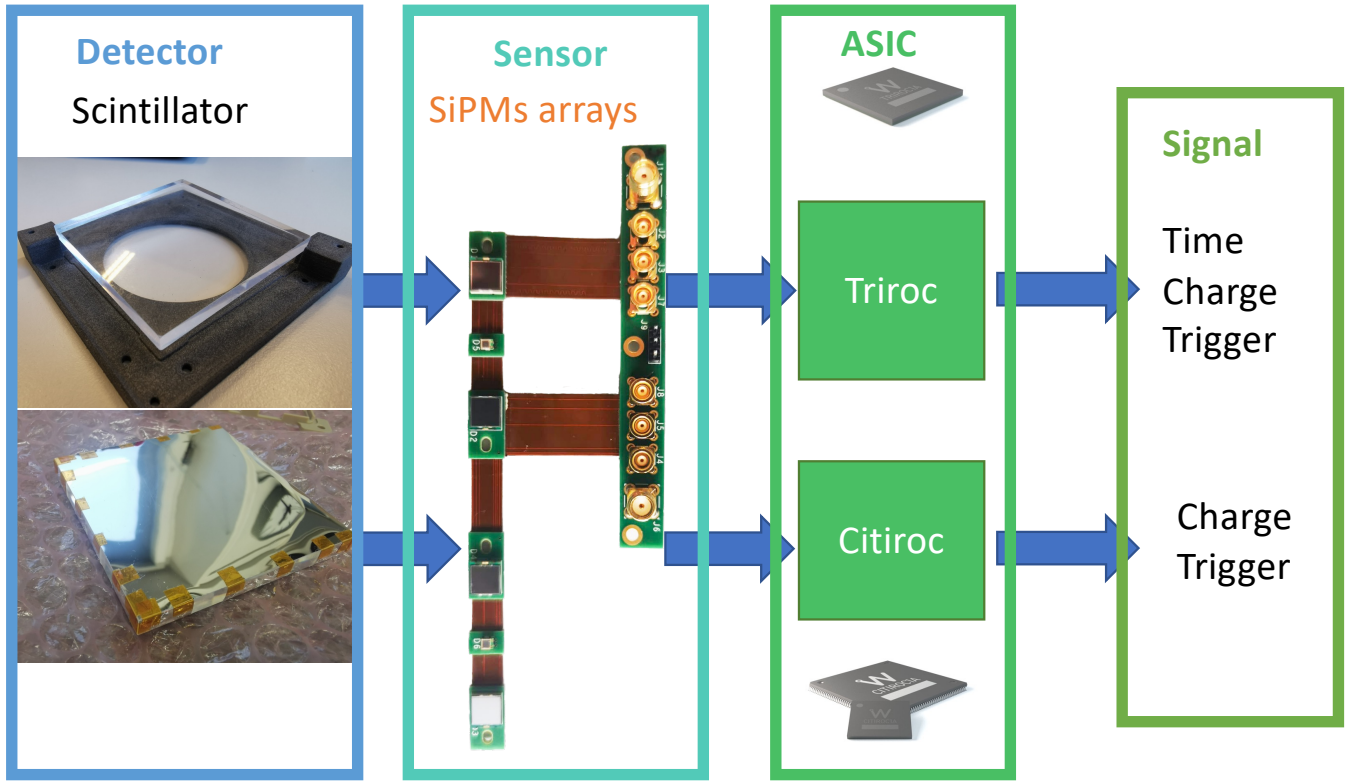

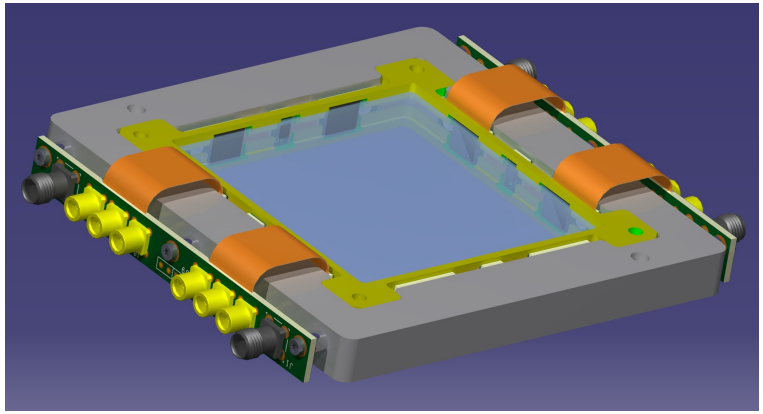

- Detector:
  - Plastic Scintillator (EJ-230), fast response
  - Reflector (Vikuiti)
- Sensor:
  - 12 SiPMs per module.
  - 4 different types (HPK-S13360) to probe different energy ranges (4x6050, 2x6075, 2x6025, 4x1325)
- ASIC:
  - Triroc (Time, Charge, Trigger)
  - Citiroc (Charge, Trigger)

Penetrating Particle Analyzer

TOF module

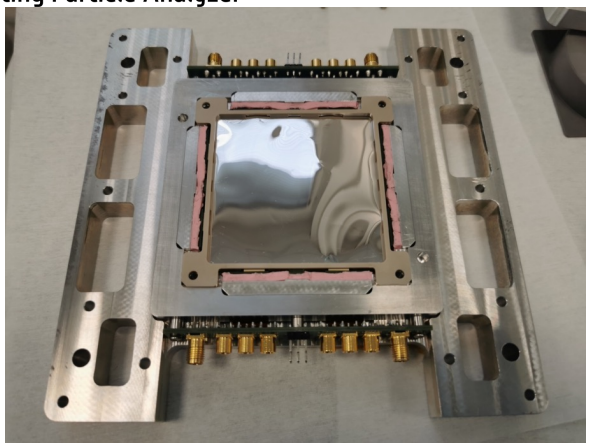

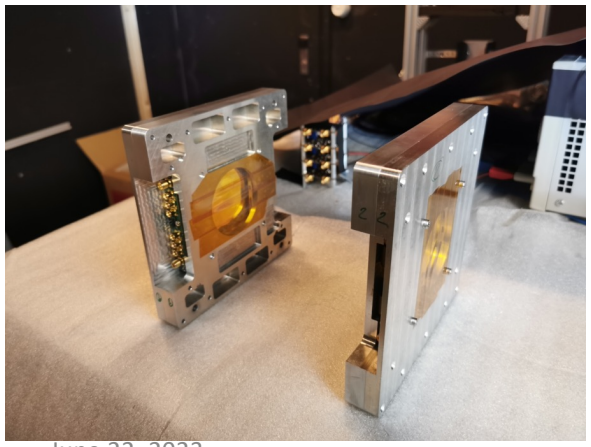

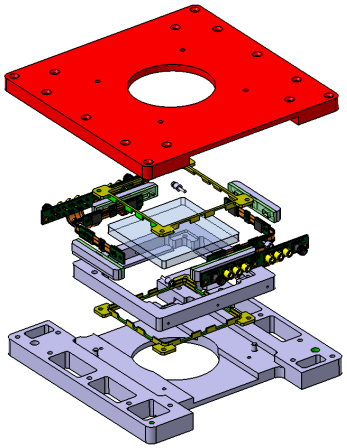

- Each TOF consists of two SiPM arrays.
- Connection between SiPM and scintillator reinforced by thermal gaps.

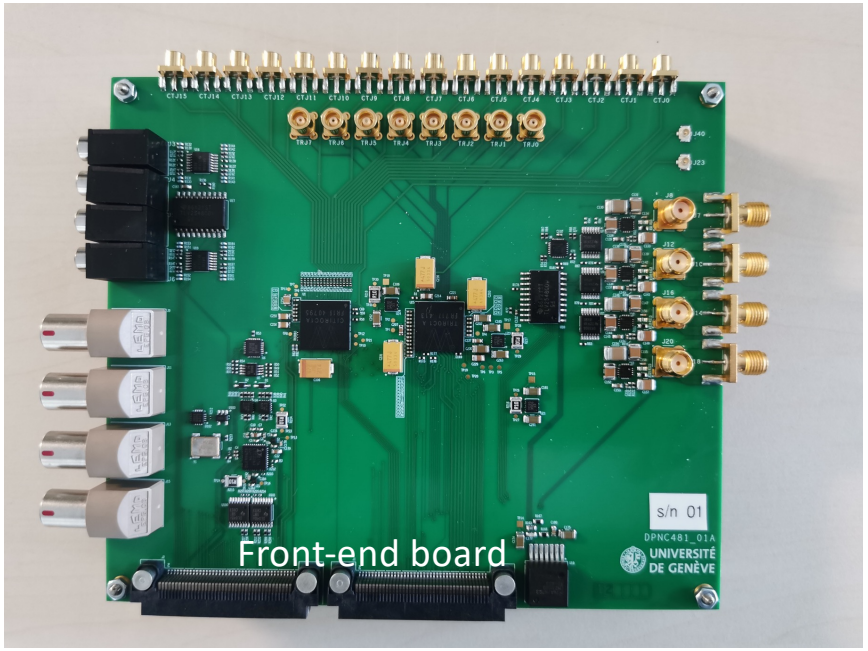

Front-end electronics: Citiroc+Triroc
Back-end electronics: GPIO

SiPM Calibration
Penetrating Particle Analyzer

TOF response

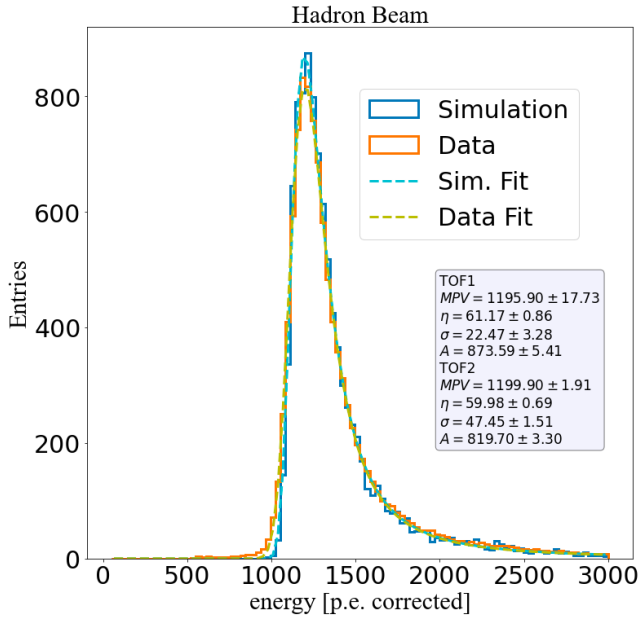

- Result from 15 GeV/c hadron beam.
- Similar light yield for both modules.
- Good agreement with simulation.

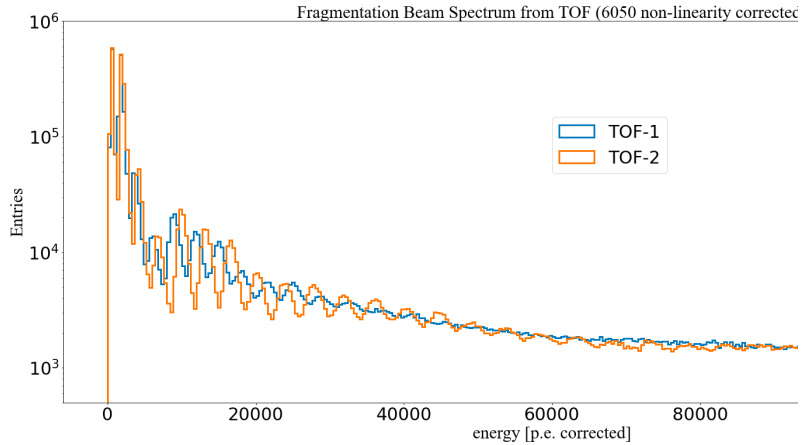

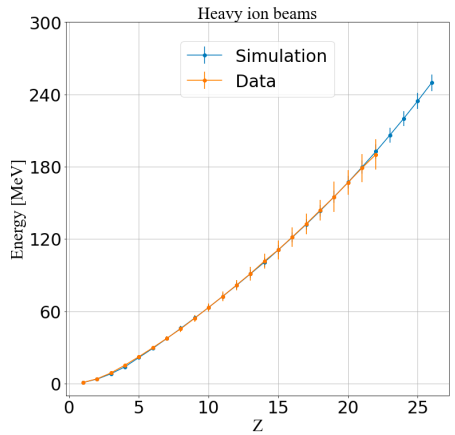

- Result from fragmentation ion beam.
- Able to observe Z up to 21.
- Good agreement with simulation.

Penetrating Particle Analyzer

Pixel module

The pixel module is equipped with a Timepix3 quad detector:

- 262’144 pixels with pixel pitch 55 µm (2.8 x 2.8 cm)
- Simultaneous time of arrival (ToA) and time over threshold (ToT) measurement in each pixel.
- Sensor thickness 300 µm
- ToA binning: down to 1.56 ns

Challenges:

- Power consumption
- Temperature management

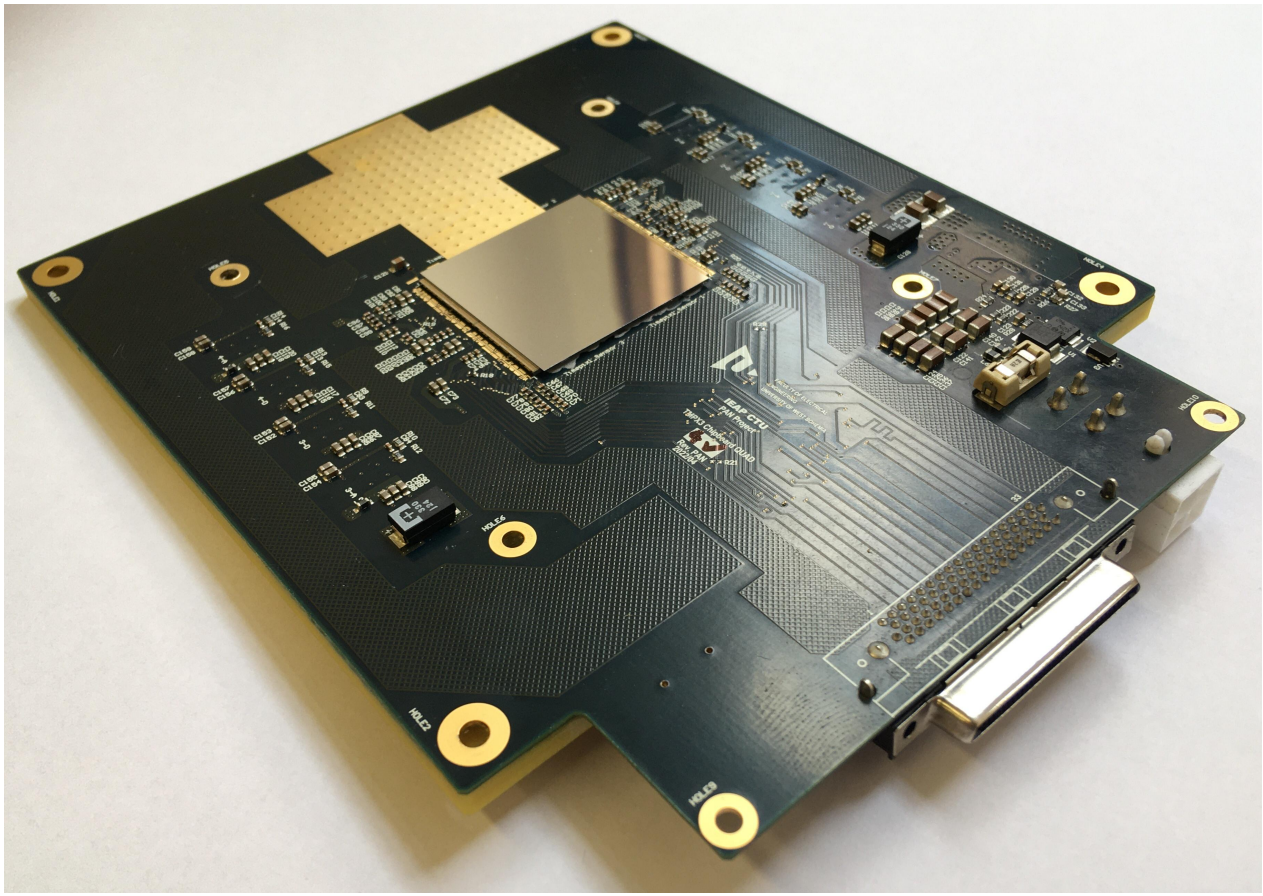

Penetrating Particle Analyzer

Pixel module

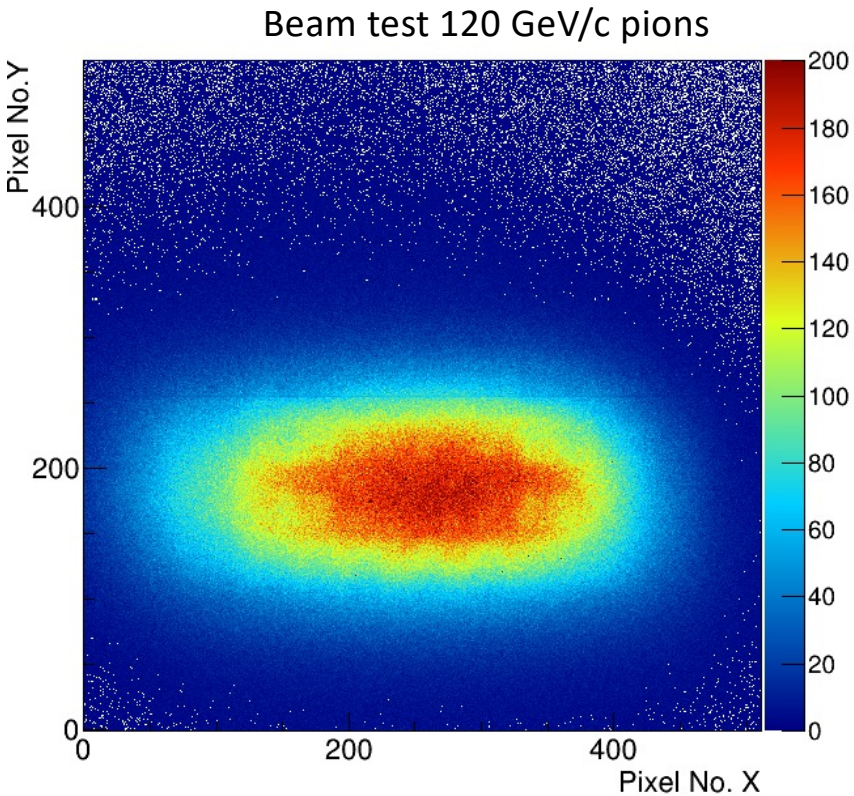

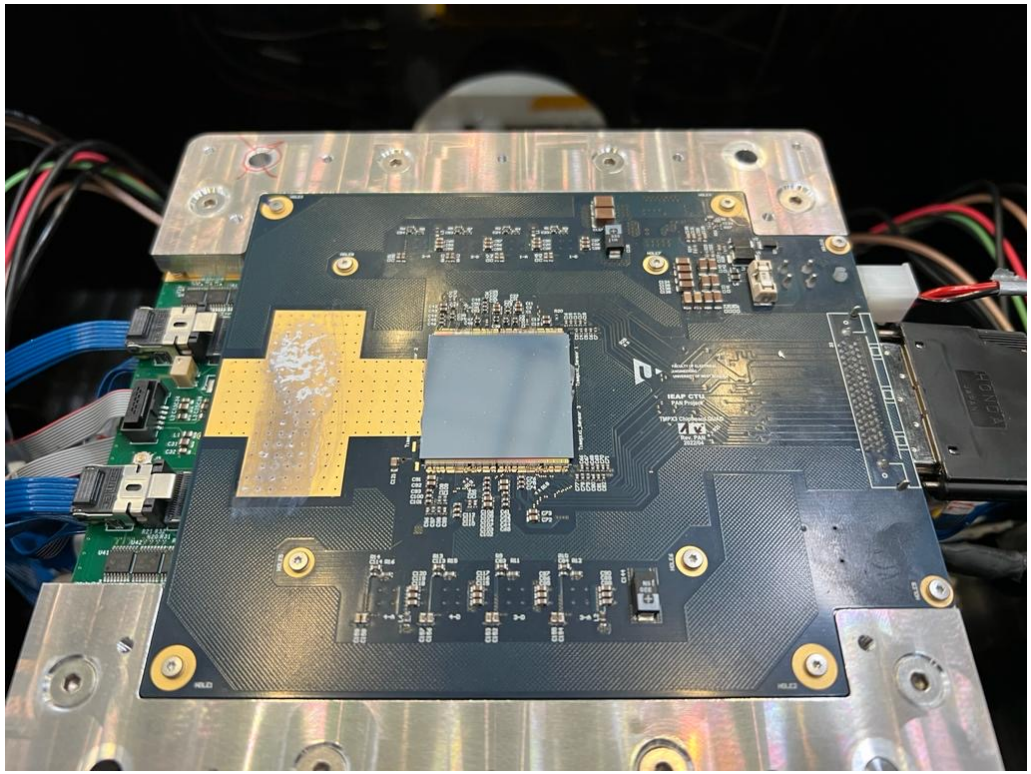

Penetrating Particle Analyzer

Pixels: low power mode study

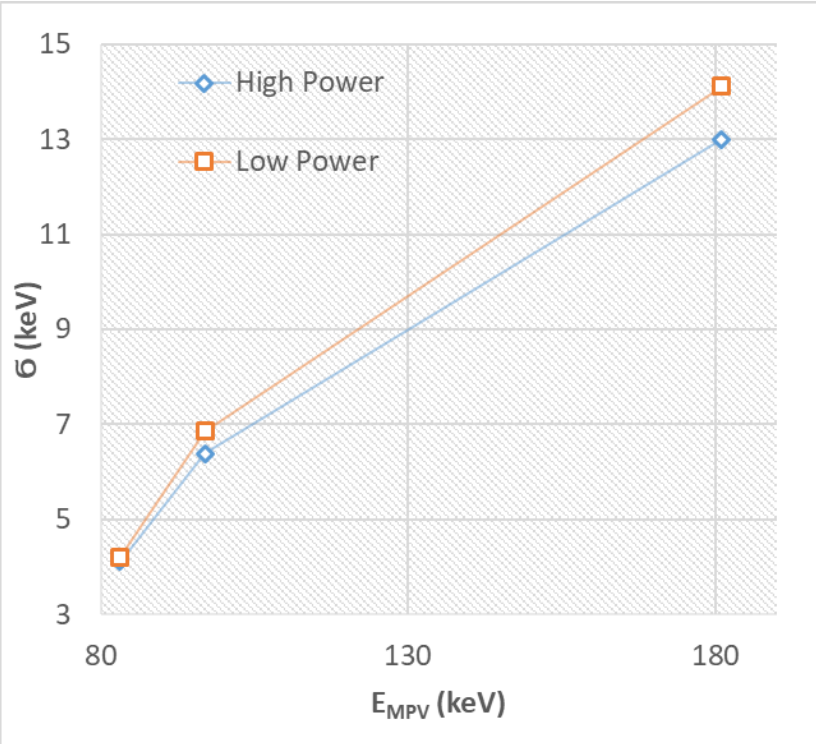

- No significant performance loss in analogue low power mode
- Power consumption/Temperature:
  - LP: ~4W - 50-60°C
  - HP: ~6 W - 70-80°C
- An even lower power mode should be available: 2.4 W

a) High power mode

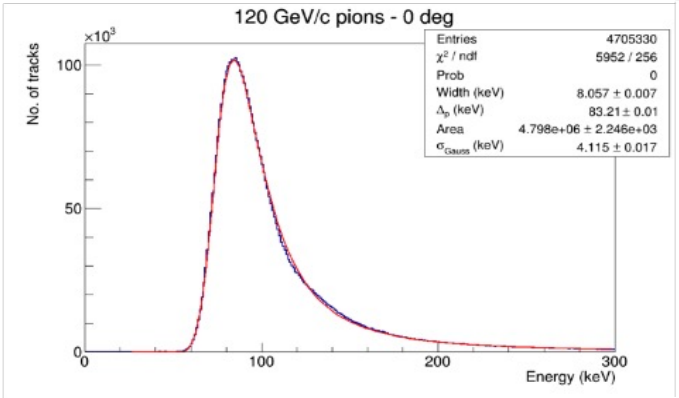

b) Low power mode

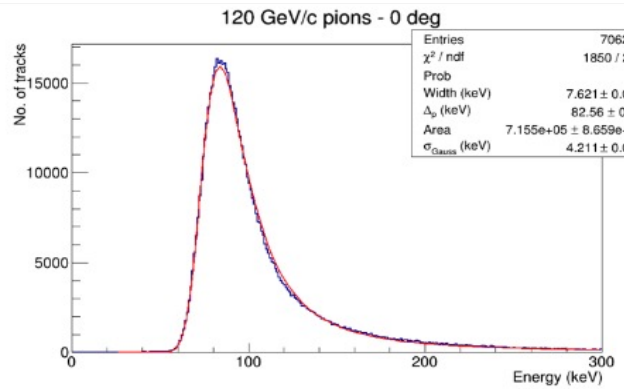

P. Burian *et al* 2019 *JINST* **14** C01001

Penetrating Particle Analyzer

Tracker module

- Mini.PAN is equipped with three tracker modules
- Each module hosts three sensors.
- Two to measure the X-coordinate ("Strip-X")
  - 150 µm thickness, 25 µm pitch, 2048 strips, all read out.
  - 32 IDEAS IDE1140 ASICs to read out one sensor.
  - Double metal layer to route the signals all around the sensor (pitch 96 µm to connect to the ASICs).
  - Active area: 5 cm x 5 cm
- One to measure the Y-coordinate ("Strip-Y")
  - 150 µm thickness, 400 µm pitch, 128 strips, all read out.
  - 1 IDEAS VATA GP 7.2 ASIC to read out one sensor.
  - Active area: disk of 5 cm diameter.
- Sensor external dimension: 6 cm x 6 cm (both X and Y versions)
- Produced by Hamamatsu.

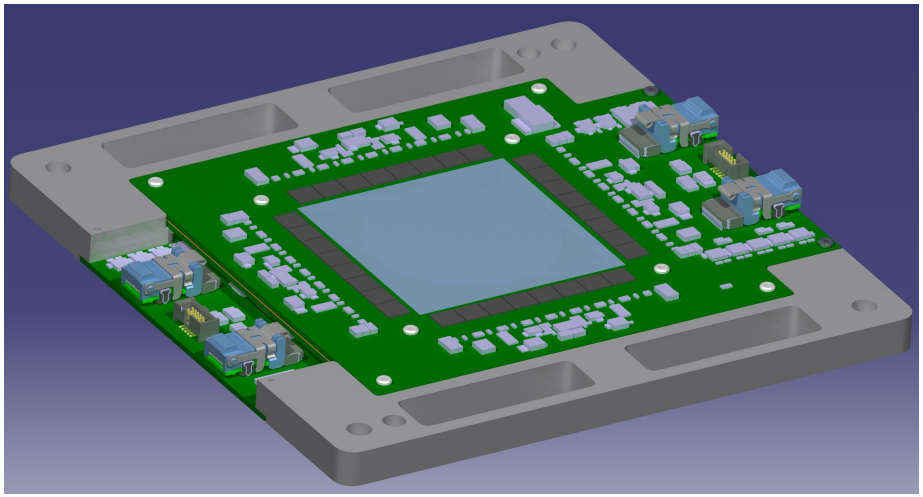

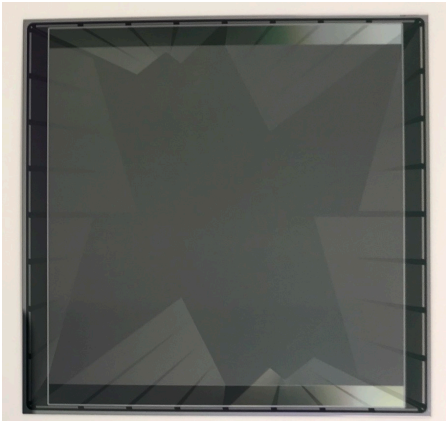

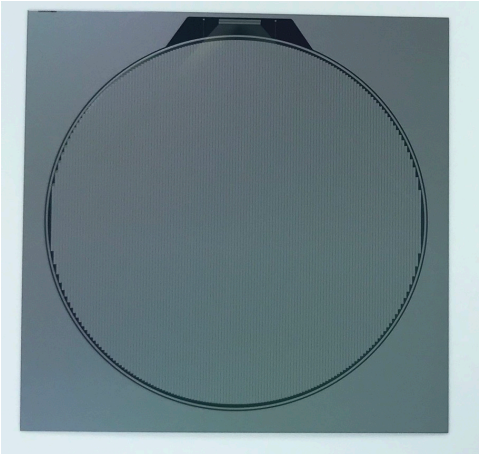

Penetrating Particle Analyzer

Tracker boards

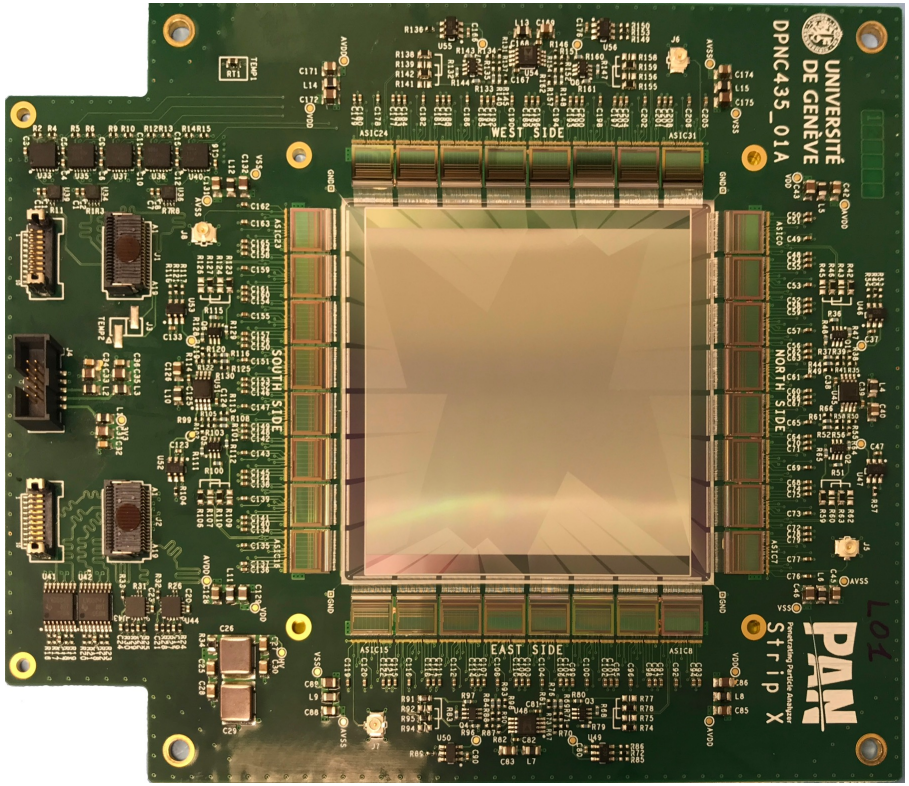

Strip-X

32 ASICs, 2048 output channels

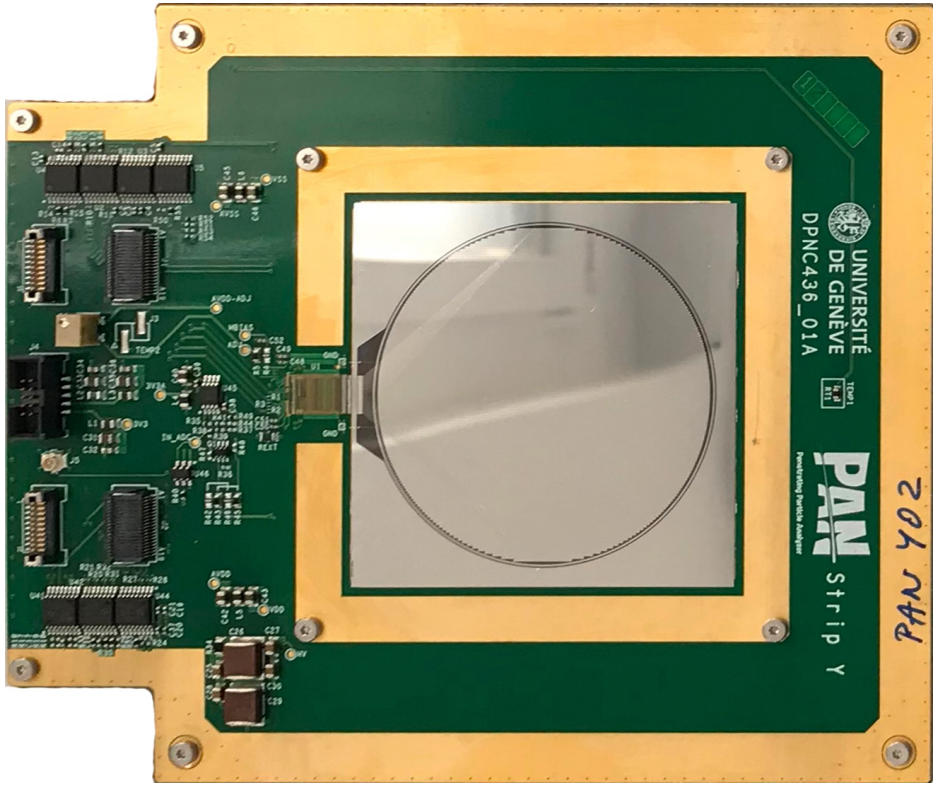

Strip-Y

1 ASICs, 128 output channels

Penetrating Particle Analyzer

Tracker: tests with cosmics

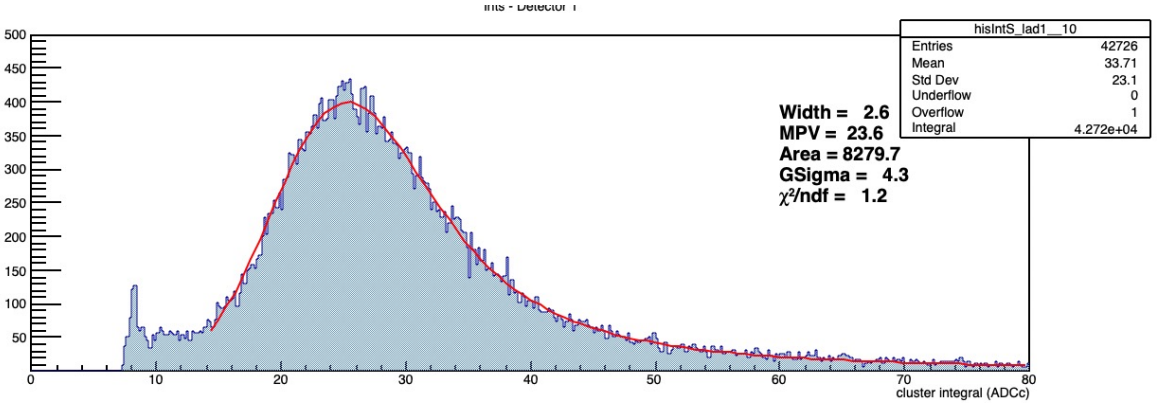

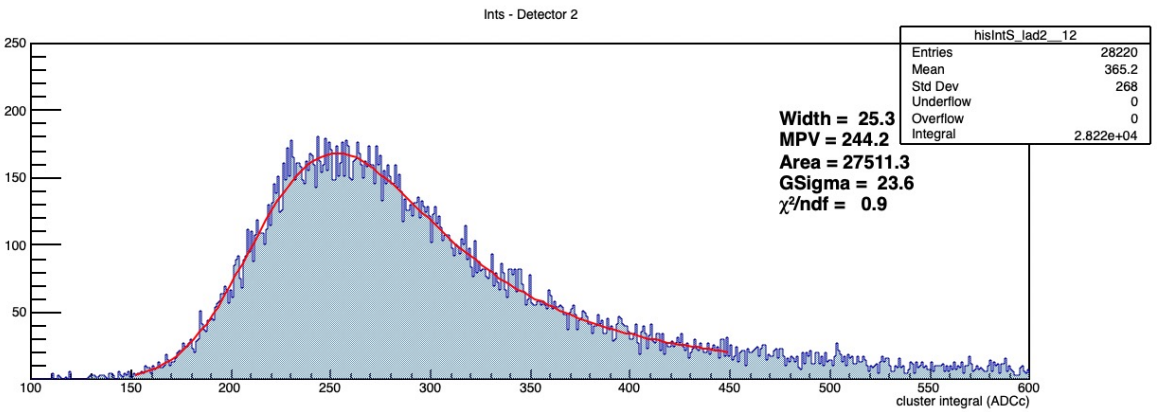

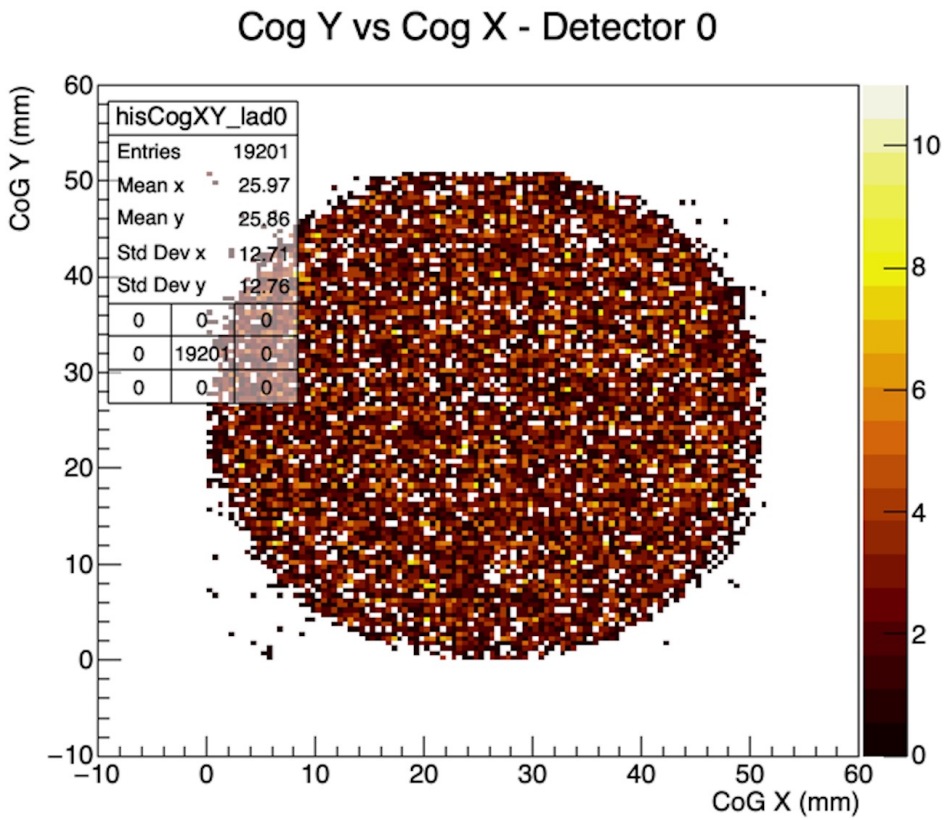

Penetrating Particle Analyzer

Position resolution

- Mini.PAN has been tested at several beam tests at CERN.
- Last beam test: April 2023, at PS @ CERN (T9)
- Position resolution measurements done with runs w/o magnets, 15 GeV/c positive hadrons
- Tracks reconstructed with Strip-X and Pixels

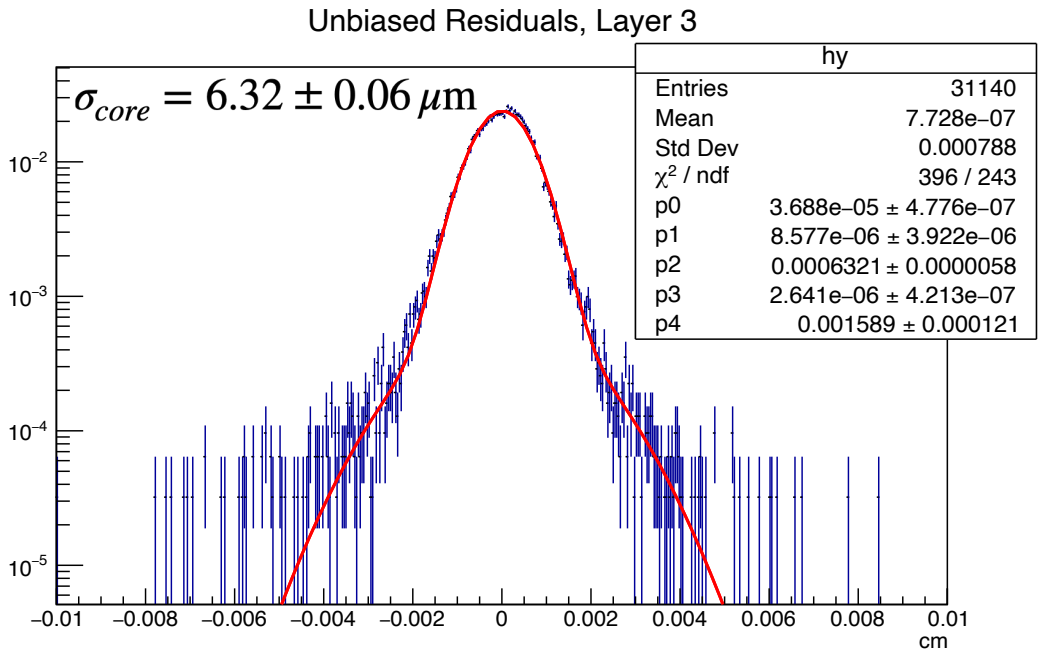

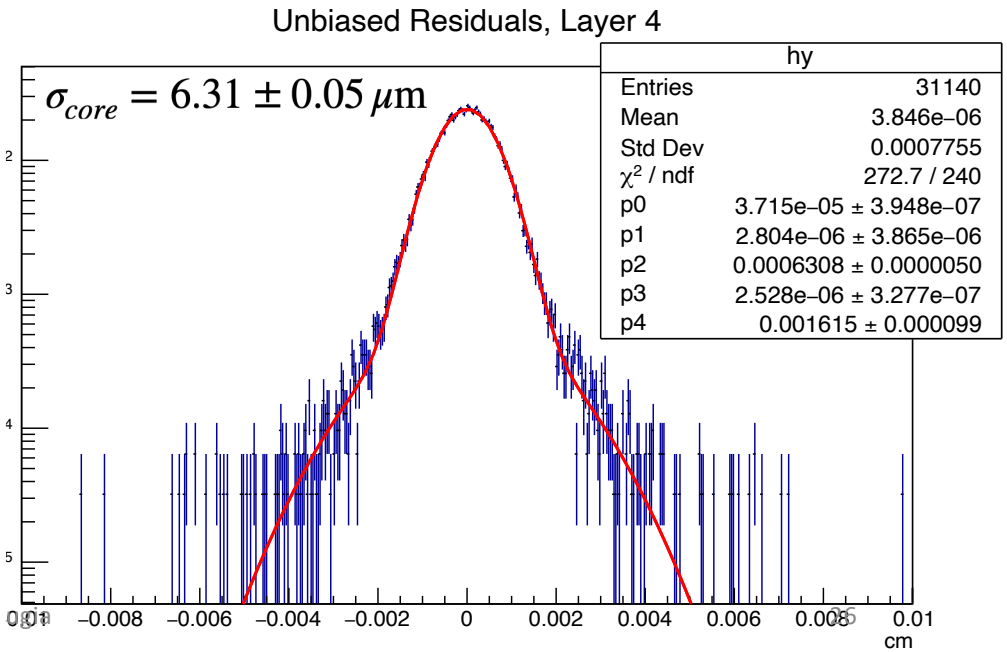

Penetrating Particle Analyzer

Position resolution vs angle

$$\text{Resolution} = \sqrt{\sigma_{core}^2 - \sigma_{MCS+extr.err}^2}$$

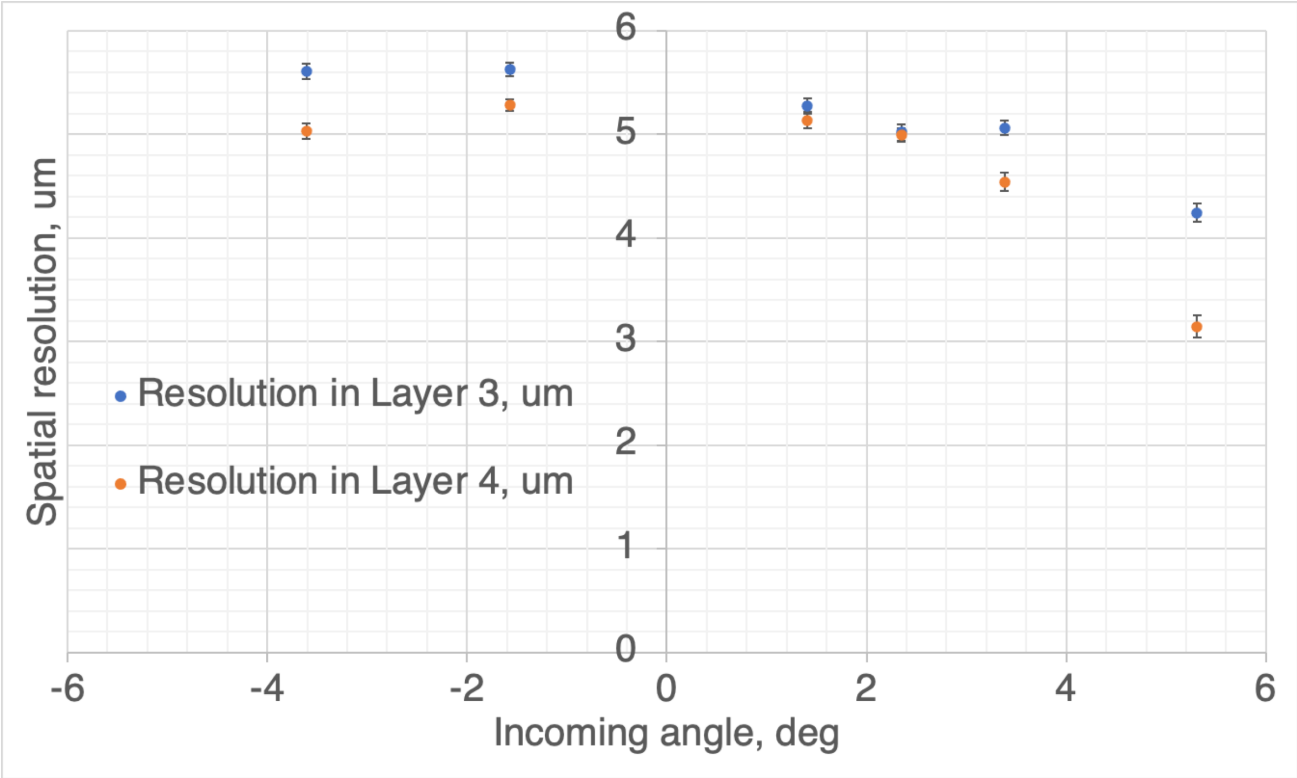

Penetrating Particle Analyzer

Space qualification

- A complete qualification of the instrument is not foreseen.
- Vibration and shock tests of mechanical grade versions of the detectors.
  - Tracker is completed.
  - Pixel and TOF will be done in July.
- Magnet vibration test: a first iteration has taken place in April 2023.
  - Results have indicated that the magnet fixation could be improved.
  - New iteration in July.
- Thermal tests of detector modules will be done in September 2023.
  - Possibly a thermal vacuum test will be done later in 2023.
- Activity conducted by the University of Perugia.

Penetrating Particle Analyzer

Vibration tests

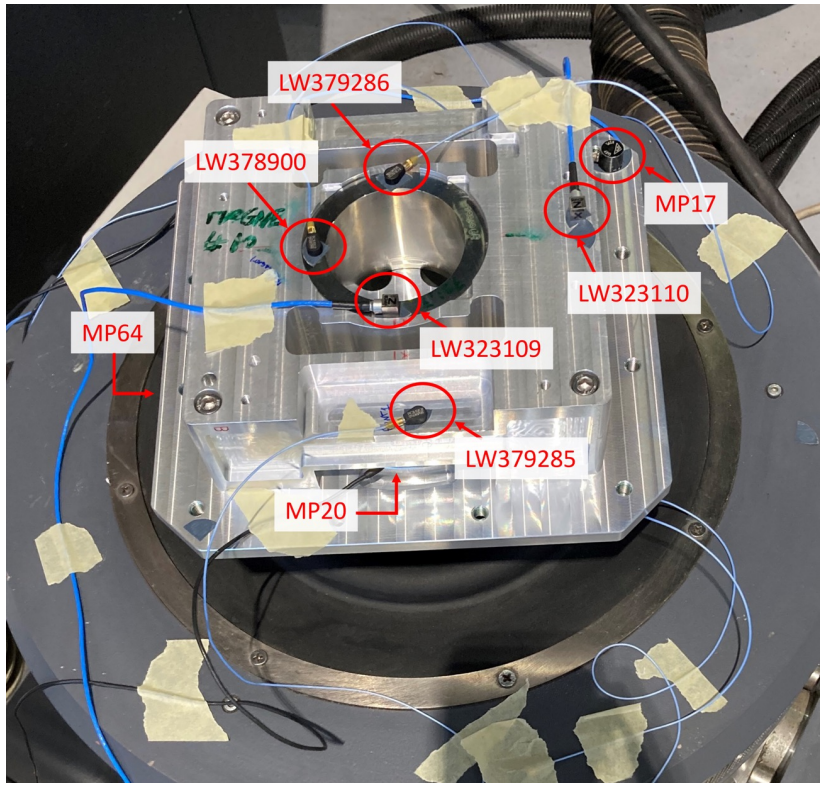

Magnet: vibration

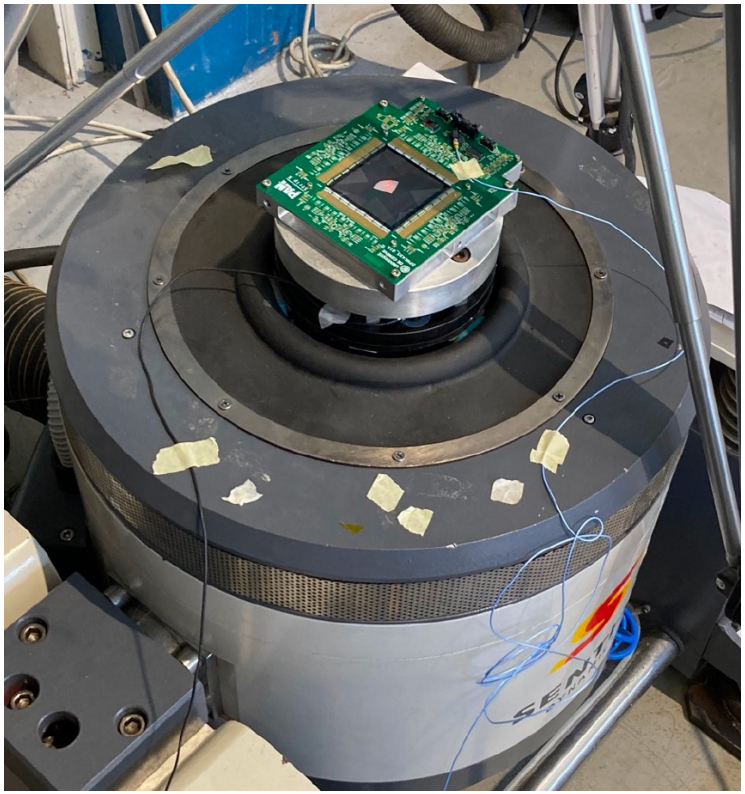

Tracker: vibration

Tracker: shock

Penetrating Particle Analyzer

PAN Possible Applications

COMPASS

- Measure particle energy and flux at Jupiter's radiation belts.
- Targeting sub-GeV/n to GeV/n.
- "Pix.PAN", which consists of 6 silicon pixel detectors are being considered and studied to meet requirements.
- COMPASS Study Reprot: G. Clark et al,, 10.22541/essoar.167751608.84818747/v1

REMEC

- Precisely measure and monitor the flux, composition and particle's direction in deep space outside Earth's magnetosphere.
- Targeting 10 MeV/n – 20 GeV/n.
- Stack 2x mini.PAN to within 30x30x30 cm^3 or 2x Pix.PAN are being considered and studied.
- Pix.PAN white paper: J. Hulsman et al.,Submitted to Exp. Astro., https://doi.org/10.21203/rs.3.rs-2743432/v1

LUNAR Orbital Platform

- **Proposed as the Galactic cosmic rays detector on the Lunar Orbital Platform- Gateway**
- Dandouras et al, Front. Astron. Space Sci. Volume 10 - 2023 doi:10.3389/fspas.2023.1120302

Penetrating Particle Analyzer

Conclusion

- The detector is complete, only the TOF readout still needs additional development.
- The detector has been extensively tested in the last 2 years and is showing very good performance.
- Additional beam tests are programmed (CNAO, CERN, TIFPA (?)).
- Vibration and thermal tests are still forseen in the second half of 2023.
- Concept proposed for different projects.
- Initially a three-year project, mini.PAN has been extended for one additional year.

Penetrating Particle Analyzer