SRF TECHNOLOGY FOR PARTICLE ACCELERATORS: PROGESS REPORT

Jean Delayen

Center for Accelerator Science
Old Dominion University
and
Thomas Jefferson National Accelerator Facility

SRF Technology

- The SRF technology is increasingly becoming the technology of choice for an increasing number of accelerator applications
  - High energy physics (ILC, Project X)
  - Nuclear Physics (Jlab, FRIB)
  - Spallation Neutron Sources (SNS, ESS, CSNS)
  - Accelerator Driven Systems (EUROTRANS, MYRRAH)
  - Light Sources (X-FEL)

ILC

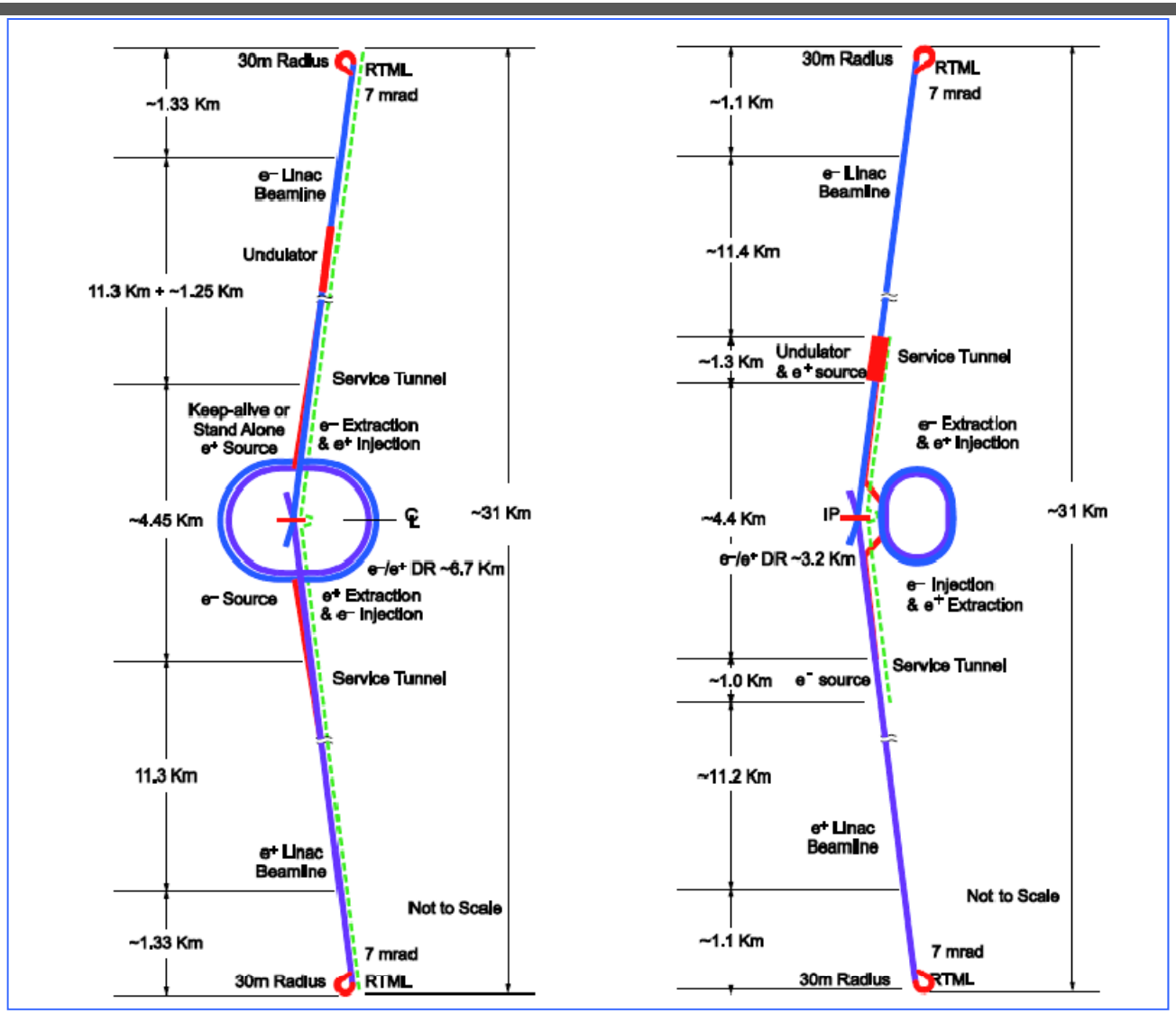
30m Radius
RTML
7 mrad
~1.33 Km
e− Linac Beamline
Undulator
11.3 Km + ~1.25 Km
Service Tunnel
Keep-alive or Stand Alone e+ Source
e− Extraction & e+ Injection
~4.45 Km
~31 Km
e−/e+ DR ~6.7 Km
e− Source
e+ Extraction & e− Injection
Service Tunnel
11.3 Km
e+ Linac Beamline
Not to Scale
~1.33 Km
7 mrad
30m Radius
RTML
30m Radius
RTML
7 mrad
~1.1 Km
e− Linac Beamline
~11.4 Km
~1.3 Km
Undulator & e+ source
Service Tunnel
e− Extraction & e+ Injection
~4.4 Km
IP
~31 Km
e−/e+ DR ~3.2 Km
e− Injection & e+ Extraction
Service Tunnel
~1.0 Km
e− source
~11.2 Km
e+ Linac Beamline
Not to Scale
~1.1 Km
7 mrad
30m Radius
RTML

Global Plan for ILC Gradient R&D

Year	07	2008	2009	2010	2011	2012
Phase	TDP-1			TDP-2		
Cavity Gradient in v. test to reach 35 MV/m	→ Yield 50%			→ Yield 90%		
Cavity-string to reach 31.5 MV/m, with one-cryomodule		Global effort for string assembly and test (DESY, FNAL, INFN, KEK)				
System Test with beam acceleration			FLASH (DESY) , NML (FNAL) STF2 (KEK, test start in 2013)			
Preparation for Industrialization				Production Technology R&D		

New baseline gradient:

Vertical acceptance: 35 MV/m average, allowing ±20% spread (28-42 MV/m)

Operational: 31.5 MV/m average, allowing ±20% spread (25-3)8 MV/m

A. Yamamoto, SRF-110725

Advances in ILC-SRF

Global ILC Cavity Gradient Yield
Updated, March, 2011

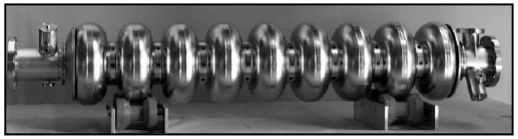

Plot courtesy
Camille Ginsburg of FNAL

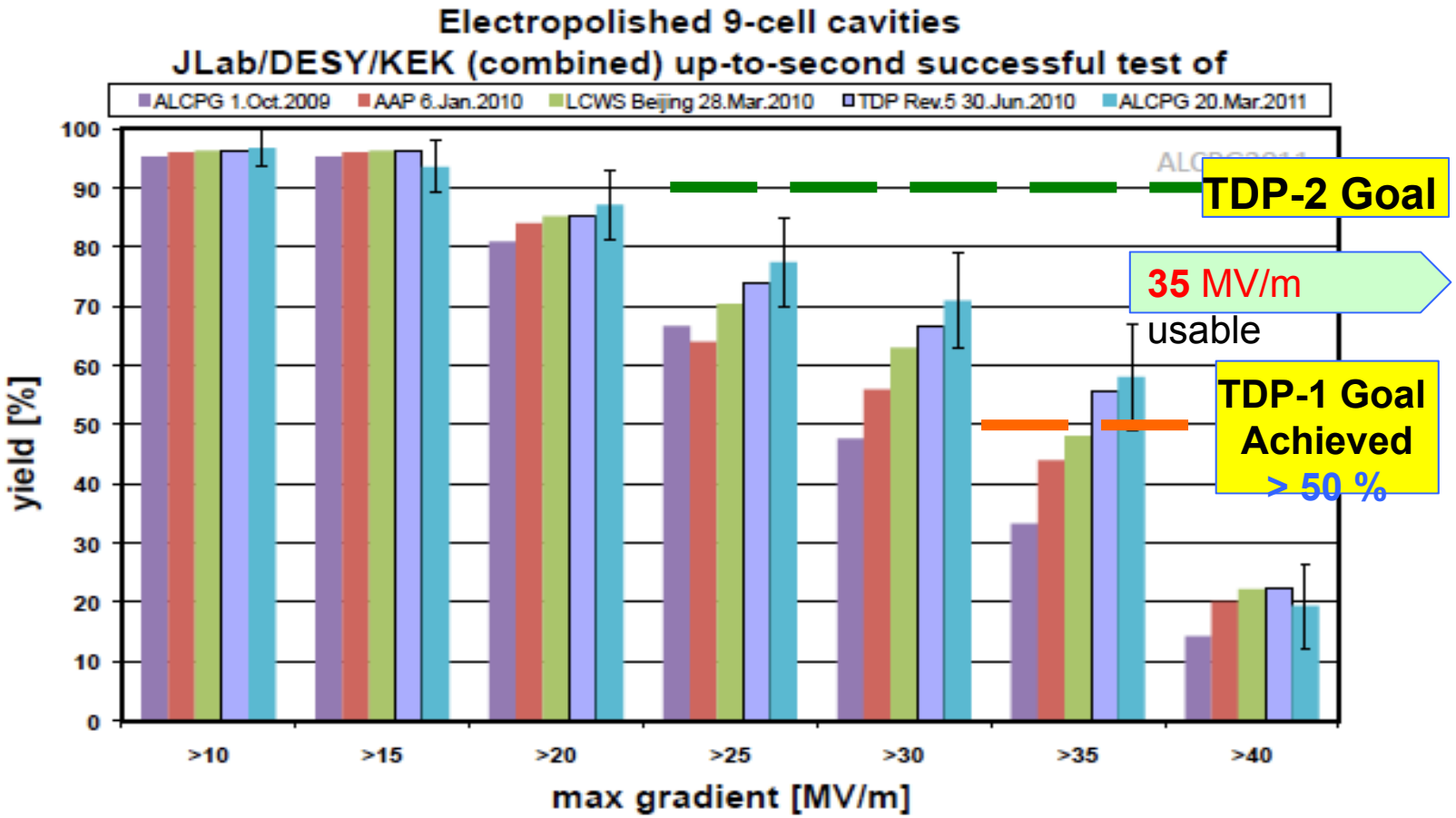

Advances in ILC-SRF

A. Yamamoto, SRF-110725

Fermilab Project X

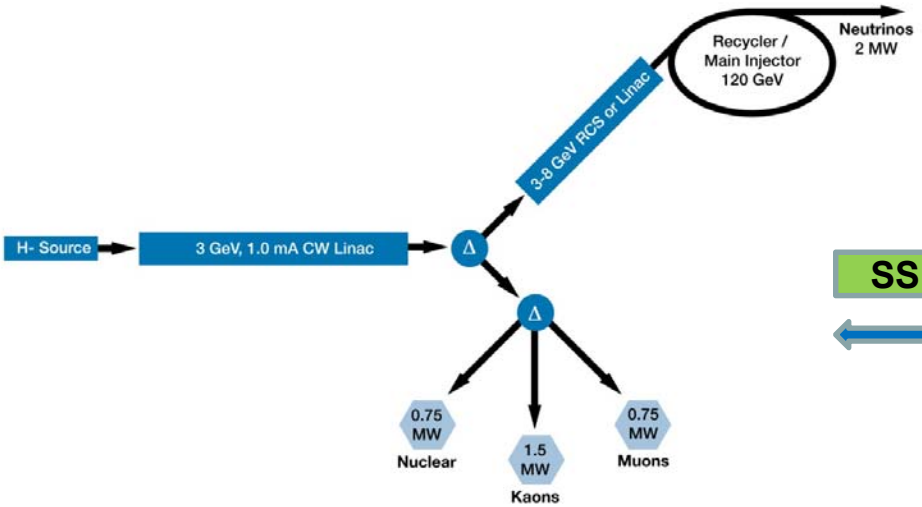

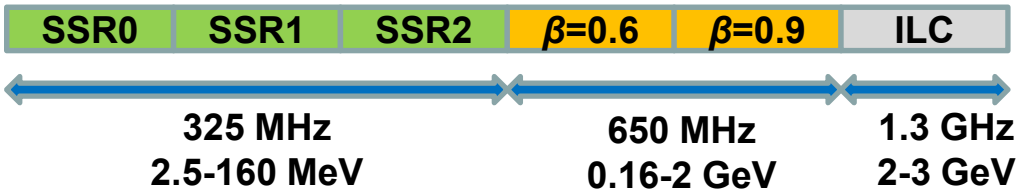

Section	Freq	Energy (MeV)	Cav/mag/CM	Type
SSR0 (β_G=0.11)	325	2.5-10	26 /26/1	SSR, solenoid
SSR1 (β_G=0.22)	325	10-32	18 /18/ 2	SSR, solenoid
SSR2 (β_G=0.4)	325	32-160	44 /24/ 4	SSR, solenoid
LB 650 (β_G=0.61)	650	160-520	42 /21/ 7	5-cell elliptical, doublet
HB 650 (β_G=0.9)	650	520-2000	96 /12/12	5-cell elliptical, doublet
ILC 1.3 (β_G=1.0)	1300	2000-3000	64 / 8/ 8	9-cell elliptical, quad

Jefferson Lab 12 GeV Upgrade

CEBAF 12 GeV Upgrade

First **two** cryomodules - installation 2011
Eight more CMs in 2012-2013
≥108 MV avg.
300 W @ 2.07K

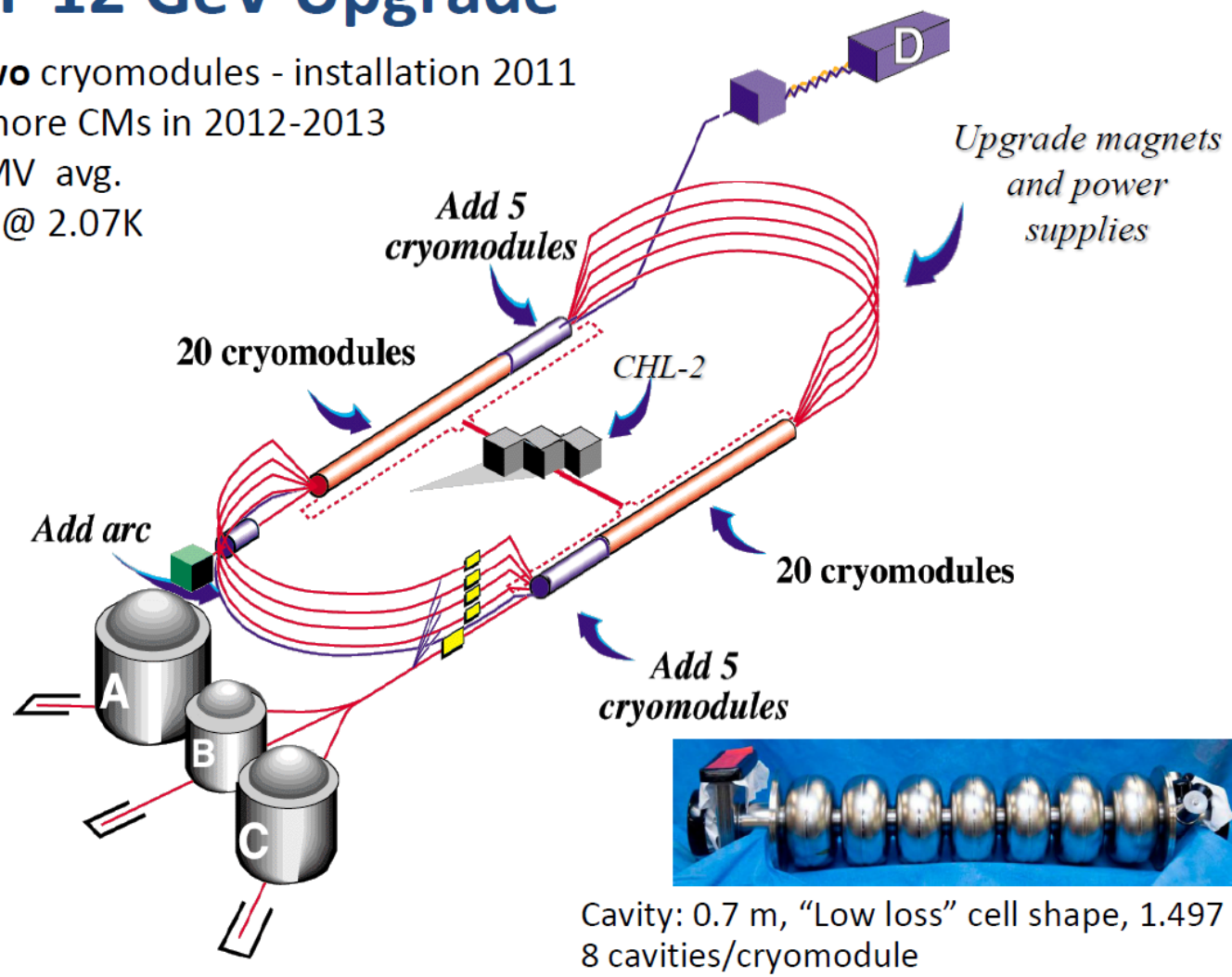

Cavity: 0.7 m, "Low loss" cell shape, 1.497 GHz
8 cavities/cryomodule

JLab : State-of-the-art Production Cavities

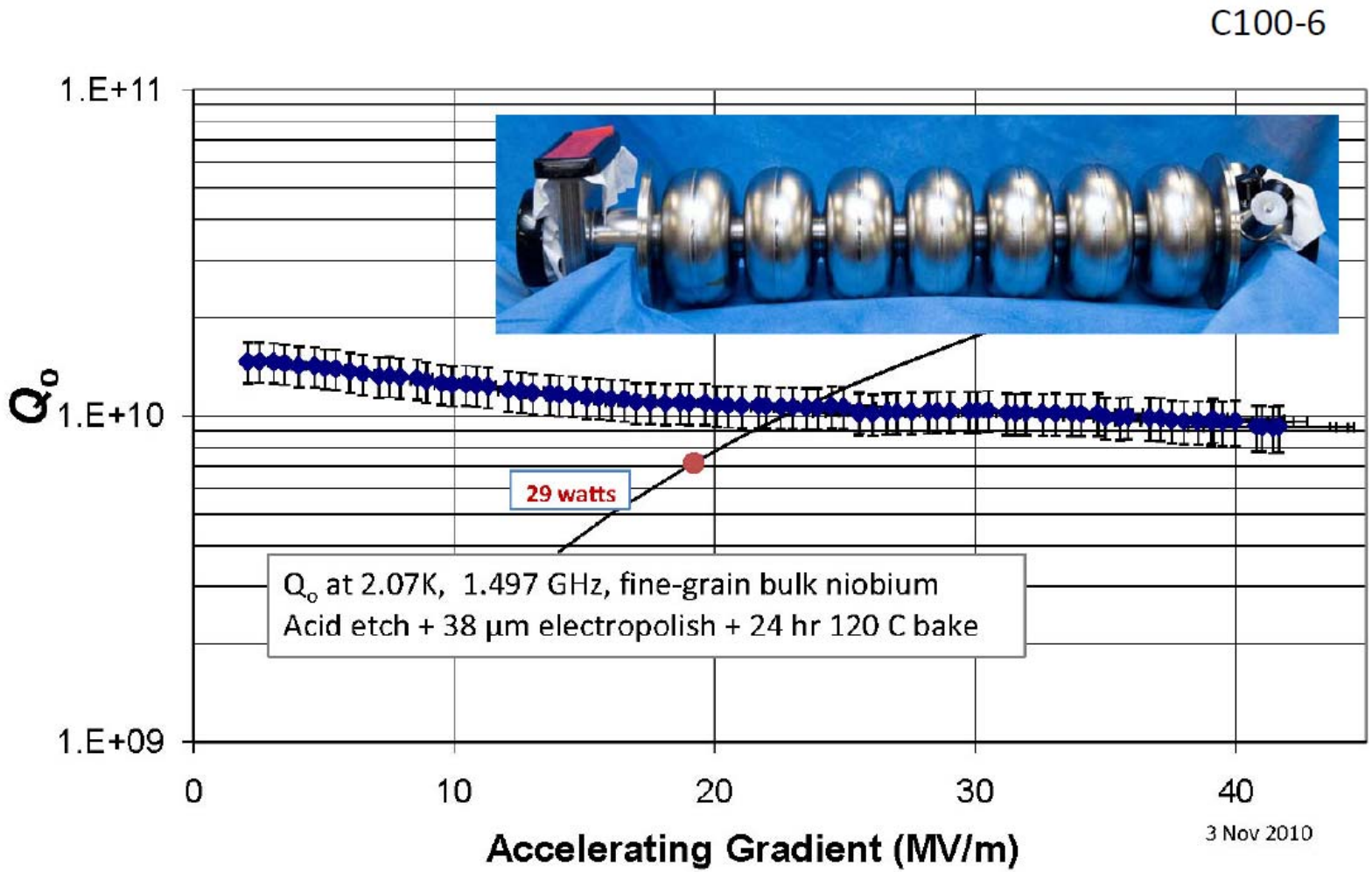

(*Q* is BCS-limited)

MSU : FRIB (1)

Project objectives: Produce RIB using a 400 kW CW heavy ion driver linac (p to U) up to 200 MeV/u.

MICHIGAN STATE UNIVERSITY

Cavity type: Quarter-wave resonators (80.5 MHz) and half-wave resonators (322 MHz), bulk niobium for a total of 344 cavities and 52 cryomodules

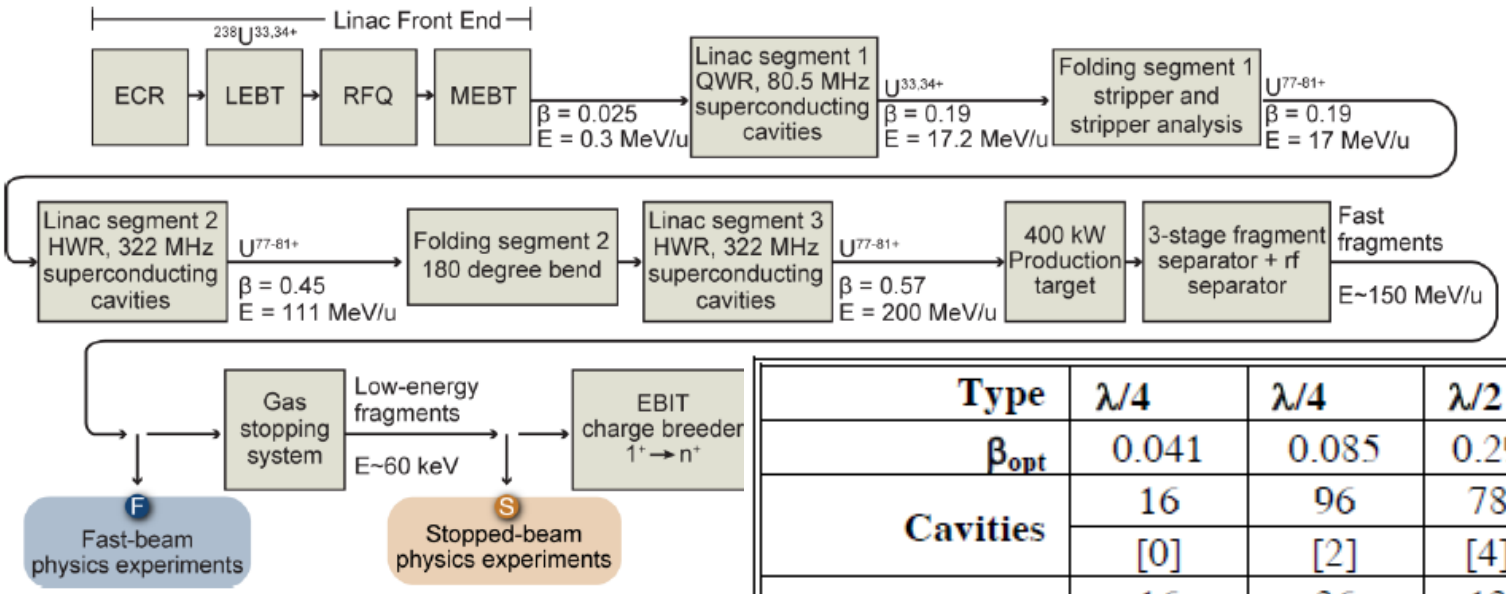

Type	λ/4	λ/4	λ/2	λ/2	Total
β_{opt}	0.041	0.085	0.29	0.53	
Cavities	16	96	78	144	
	[0]	[2]	[4]	[4]	344
Solenoids	16	36	13	8	
	[0]	[0]	[2]	[2]	87
Cryomodules	4	12	13	18	
	[0]	[1]	[2]	[2]	52

in []: matching cryomodule

Courtesy Q. Zhao, R. York

MSU : FRIB (2)

Project objectives: Produce RIB using a 400 kW CW heavy ion driver linac (p to U) up to 200 MeV/u.

Cavity type: Quarter-wave resonators (80.5 MHz) and half-wave resonators (322 MHz), bulk niobium for a total of 344 cavities and 52 cryomodules

Type	λ/4	λ/4	λ/2	λ/2
β_{opt}	0.041	0.085	0.29	0.530
f(MHz)	80.5	80.5	322	322
Aperture (mm)	30	30	30	40
V_a (MV)	0.81	1.62	1.90	3.70
E_p (MV/m)	30.0	31.5	31.5	31.5
B_p (mT)	53	71	75	77
T(K)	4.5	4.5	2.0	2.0

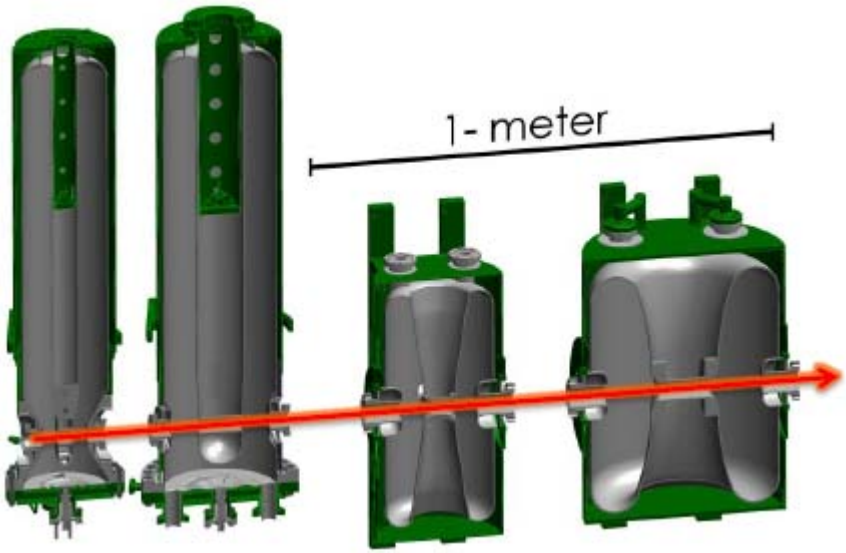

4 cavity types and 2 frequencies

GANIL, CEA, IPNO : SPIRAL-2 (1)

Project objectives: construction of a 40 MeV deuton accelerator (which can also accelerate q/A = 1/3 and 1/6) as a driver for RIB production

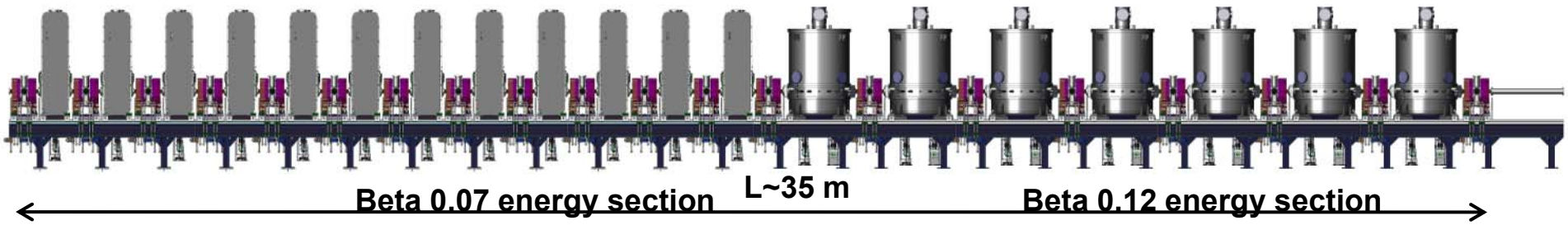

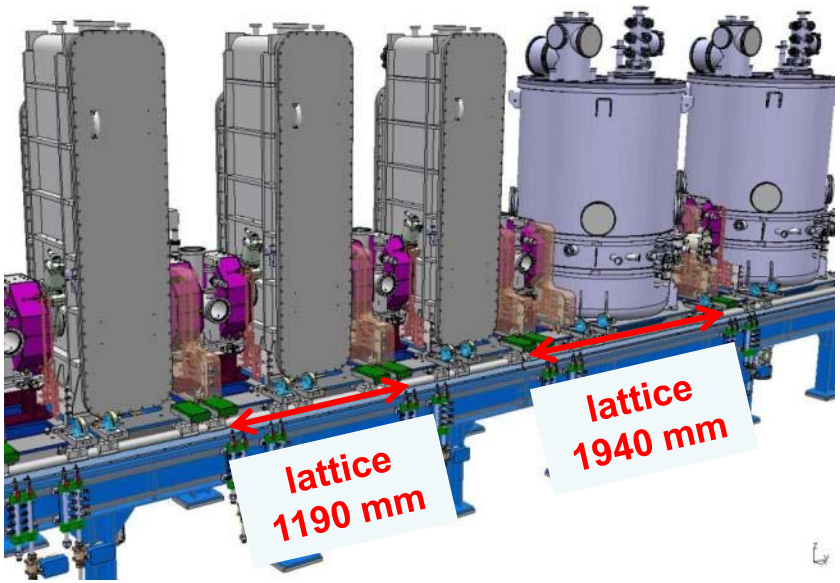

Cryomodule	A	B
Valve-to-valve length [mm]	610	1360
# cavities	12	14
f [MHz]	88.05	88.05
β_{opt}	0.07	0.12
Epk/Eacc	5.36	4.76
Bpk/Eacc [mT/MV/m]	8.70	9.35
r/Q [Ω]	599	515
Vacc @ 6.5 MV/m & β_{opt}	1.55	2.66
Lacc [m]	0.24	0.41
Beam tube ∅ [mm]	38	44

Cryomodule A	Cryomodule B	Power coupler
CEA Saclay	IPN Orsay	LPSC Grenoble

GANIL, CEA, IPNO : SPIRAL-2 (2)

Low beta cavities ("A" type): developped by CEA Saclay: QWR with dismountable copper bottom flange

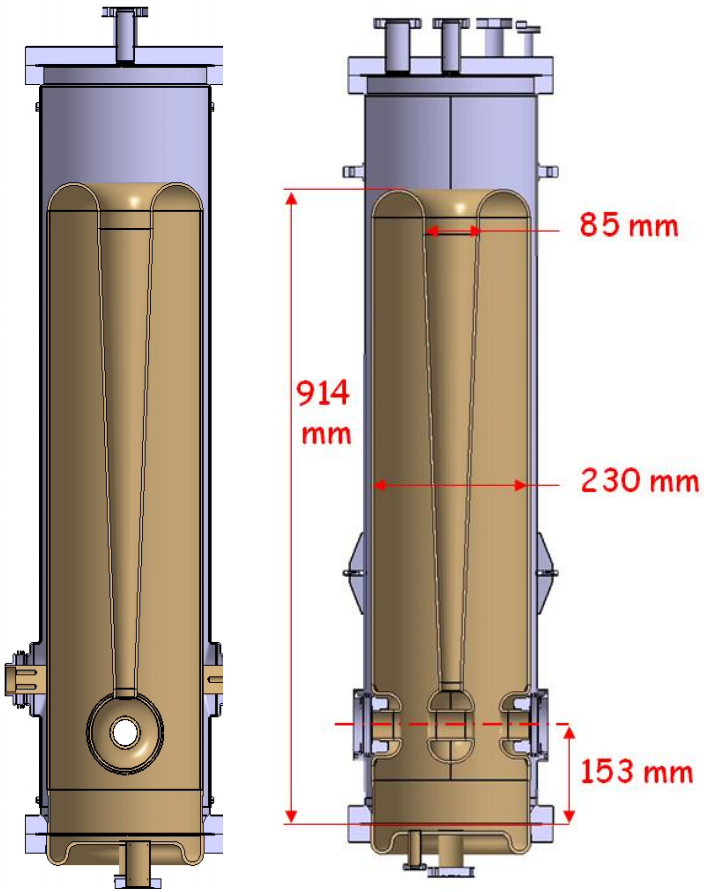

Courtesy P. Bosland

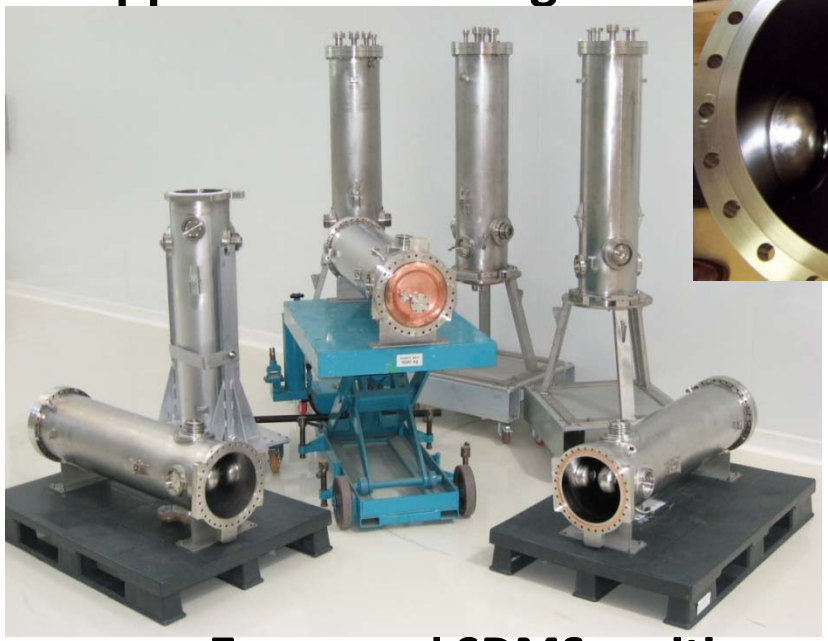

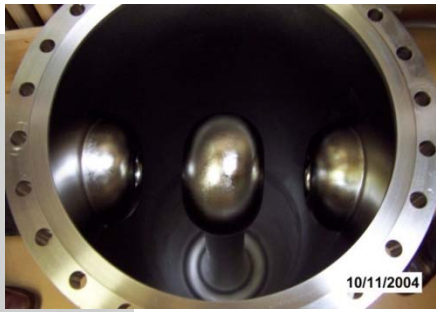

Zanon and SDMS cavities

12 over 13 cavities received – 1 under repair

GANIL, CEA, IPNO : SPIRAL-2 (3)

High beta cavities ("B" type): developped by IPN Orsay: QWR with welded Nb bottom flange, Titanium He tank (4 mm), SS cavity flanges.

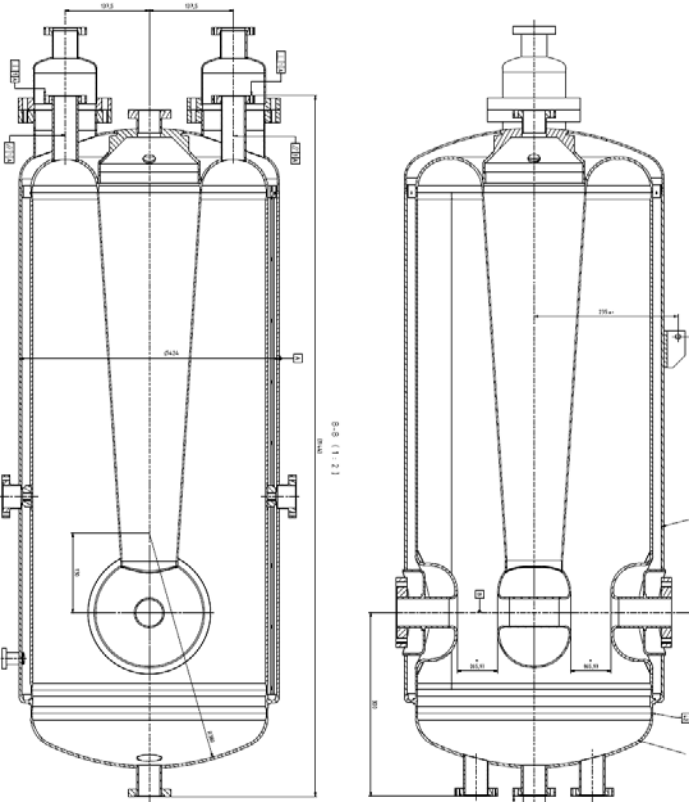

Total produced: R1D phase: 1 protoype+2 pre-series
Series production: 16 (made by Reserach Instruments)

European Spallation Source

ESS **accelerator** high-level technical objectives:

5 MW long pulse source

-2.86 ms pulses
-14 Hz
-Protons (H+)
-Low losses
-High reliability, >95%
-Continuous cryostats for minimum energy consumption
-Flexible design for a future power upgrade

Mats Lindross SRF 2011

European Spallation Source

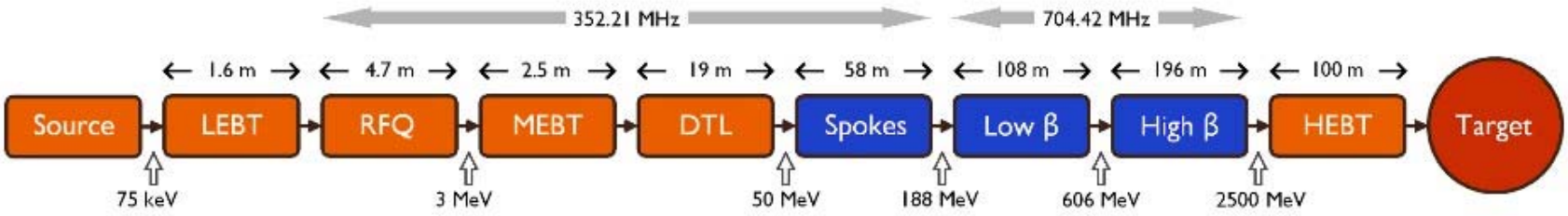

	Length (m)	Input Energy (MeV)	Frequency (MHz)	Geometric β	# of Sections	Temp (K)
RFQ	4.7	75×10^{-3}	352.2	--	1	≈ 300
DTL	19	3	352.2	--	3	≈ 300
Spoke	58	50	352.2	0.57	14 (2c)	≈ 2
Low Beta	108	188	704.4	0.70	16 (4c)	≈ 2
High Beta	196	606	704.4	0.90	15 (8c)	≈ 2
HEBT	100	2500	--	--	--	--

Mats Lindross SRF 2011

European Spallation Source

IPHI RFQ at CEA-Saclay

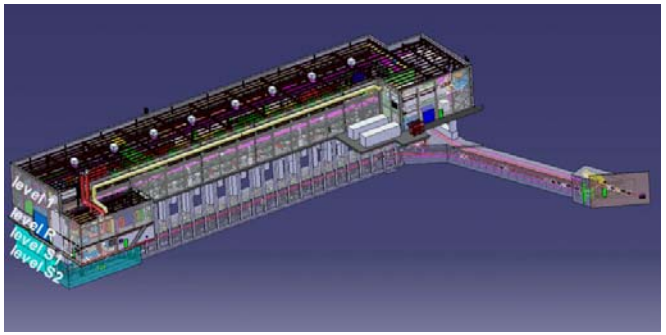

LINAC 4

SC single spoke cavity, IPNO (CNRS)

SC 5 cell cavity for 704 MHz, CEA and CNRS

Mats Lindross SRF 2011

EURISOL

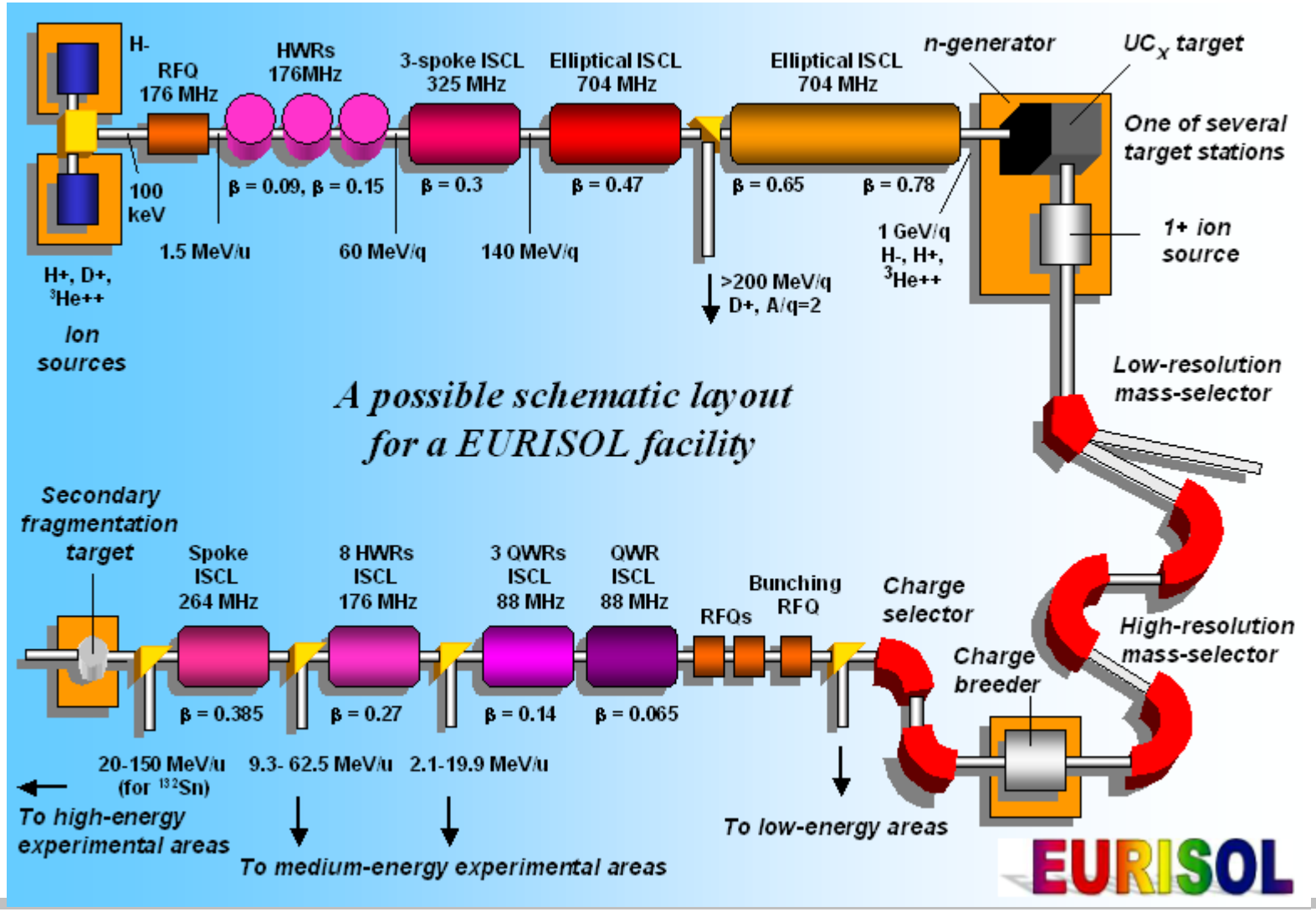
H-
RFQ
176 MHz
HWRs
176MHz
3-spoke ISCL
325 MHz
Elliptical ISCL
704 MHz
Elliptical ISCL
704 MHz
n-generator
UC$_X$ target
One of several
target stations
100
keV
β = 0.09, β = 0.15
β = 0.3
β = 0.47
β = 0.65
β = 0.78
1.5 MeV/u
60 MeV/q
140 MeV/q
1 GeV/q
H-, H+,
^{3}He++
1+ ion
source
H+, D+,
^{3}He++
ion
sources
>200 MeV/q
D+, A/q=2
Low-resolution
mass-selector
A possible schematic layout
for a EURISOL facility
Secondary
fragmentation
target
Spoke
ISCL
264 MHz
8 HWRs
ISCL
176 MHz
3 QWRs
ISCL
88 MHz
QWR
ISCL
88 MHz
RFQs
Bunching
RFQ
Charge
selector
High-resolution
mass-selector
Charge
breeder
β = 0.385
β = 0.27
β = 0.14
β = 0.065
20-150 MeV/u
(for ^{132}Sn)
9.3- 62.5 MeV/u
2.1-19.9 MeV/u
To high-energy
experimental areas
To medium-energy experimental areas
To low-energy areas
EURISOL

EURISOL

IPN Orsay

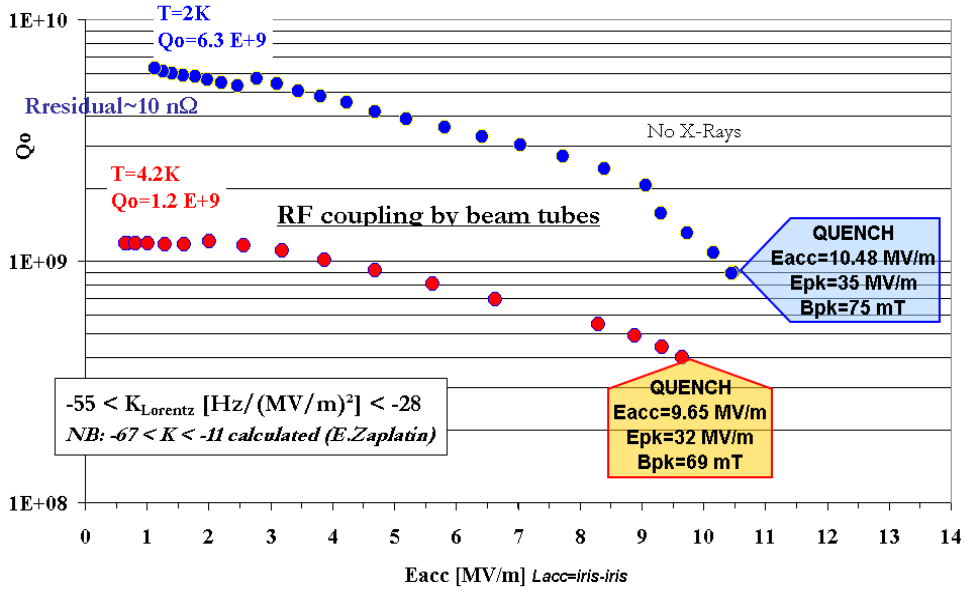

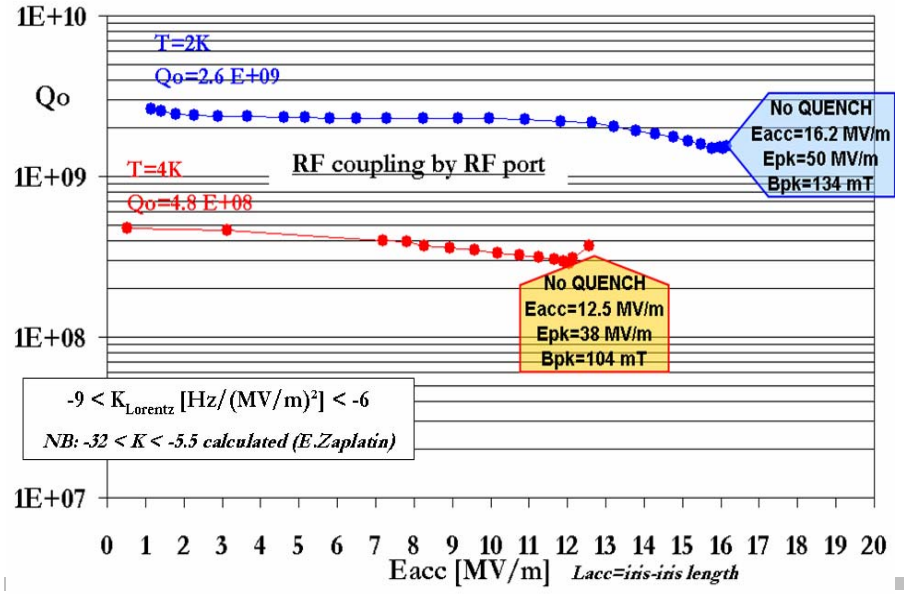

IFMIF Project

(International Fusion Materials Irradiation Facility)

Objective of the IFMIF project: characterization of materials with intense neutrons flux (10^{17} n/s) for the future Fusion Reactor DEMO (~150 dpa)

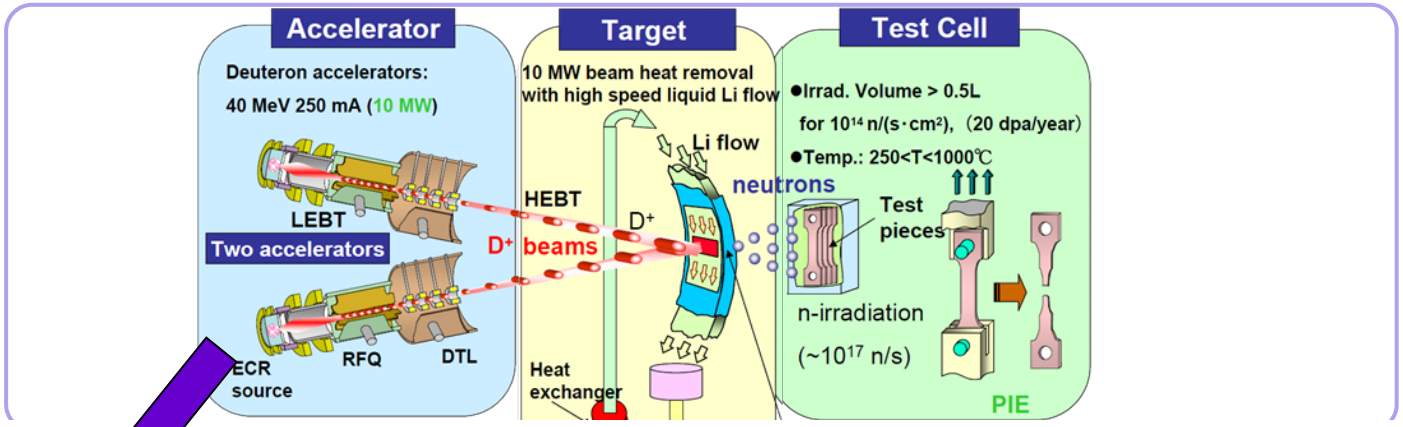

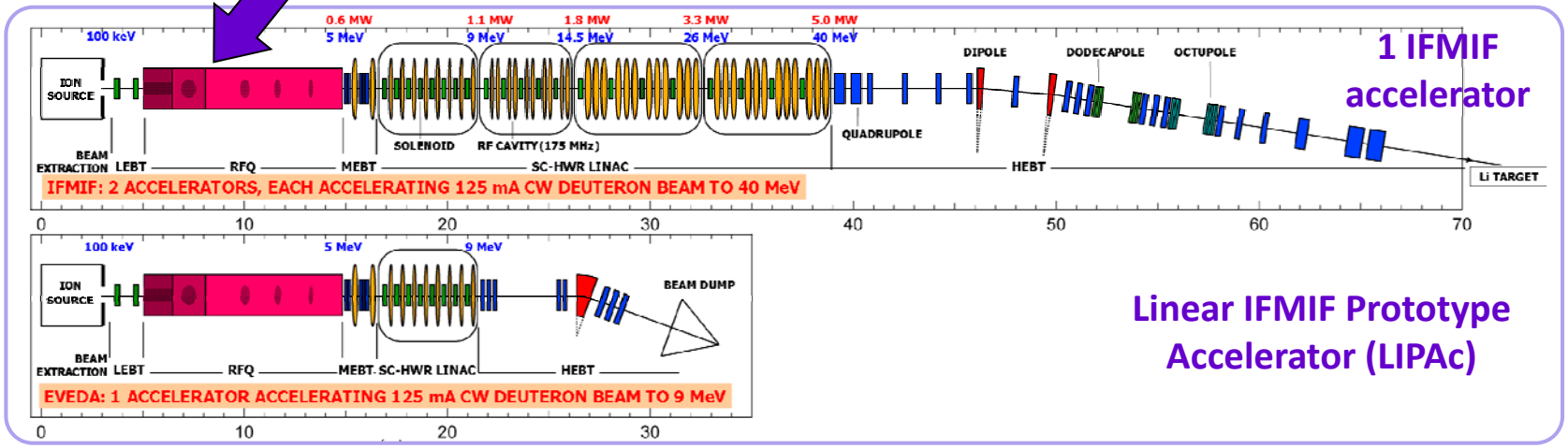

Collaboration for Accelerator: CEA (FR), INFN (IT), CIEMAT (SP), SCK-CEN (BE), JAEA (JA)

In the framework of an agreement between Euratom & Government of Japan, the program IFMIF/EVEDA has been launched in June 2007

IFMIF

Cryomodule under construction for the accelerator prototype
The first one of the IFMIF SRF Lianc~5 m Long
4.5 MV/m, reliability, limits the coupler power
Large beam aperture 40-48 mm
Qex=6.3e4

High	>20 dpa/an, 0.5 L
Medium	> 1 dpa/an, 6 L
Low	< 1 dpa/an, > 8 L

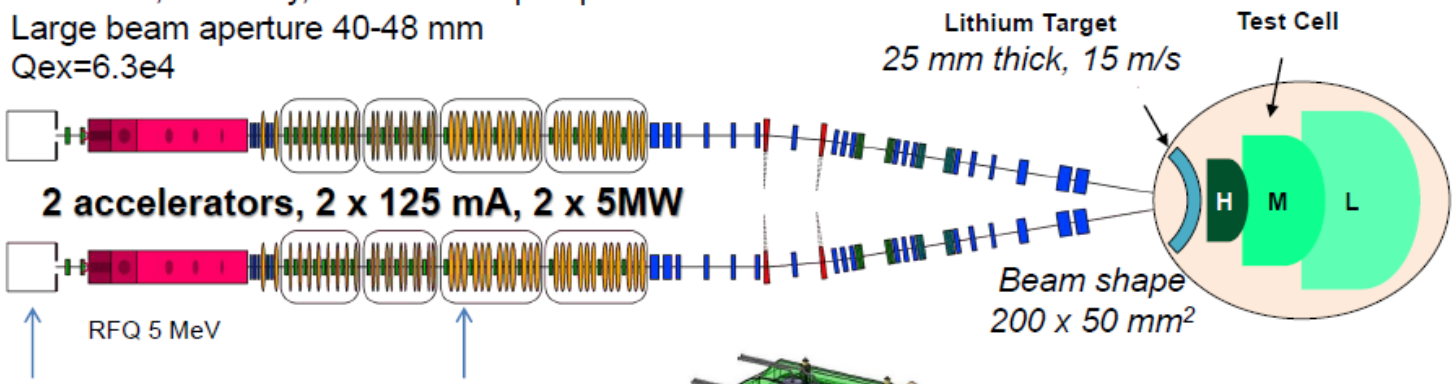

Typical reactions
$^{7}Li(d,2n)^{7}Be$
$^{6}Li(d,n)^{7}Be$
$^{6}Li(n,T)^{4}He$

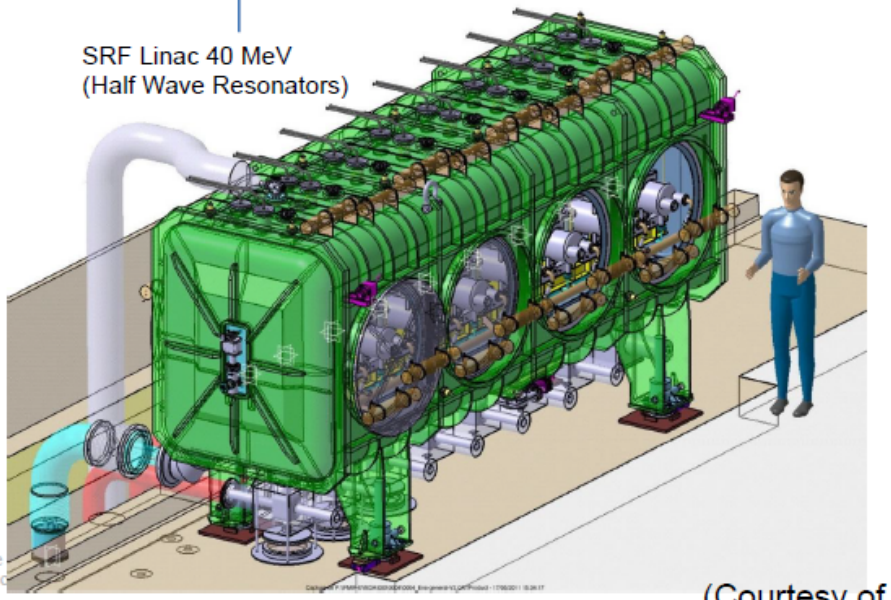

15 Managed by UT-Battelle for the U.S. Department o

(Courtesy of Alban Mosnier, CEA)

IFMIF Cryomodule general layout

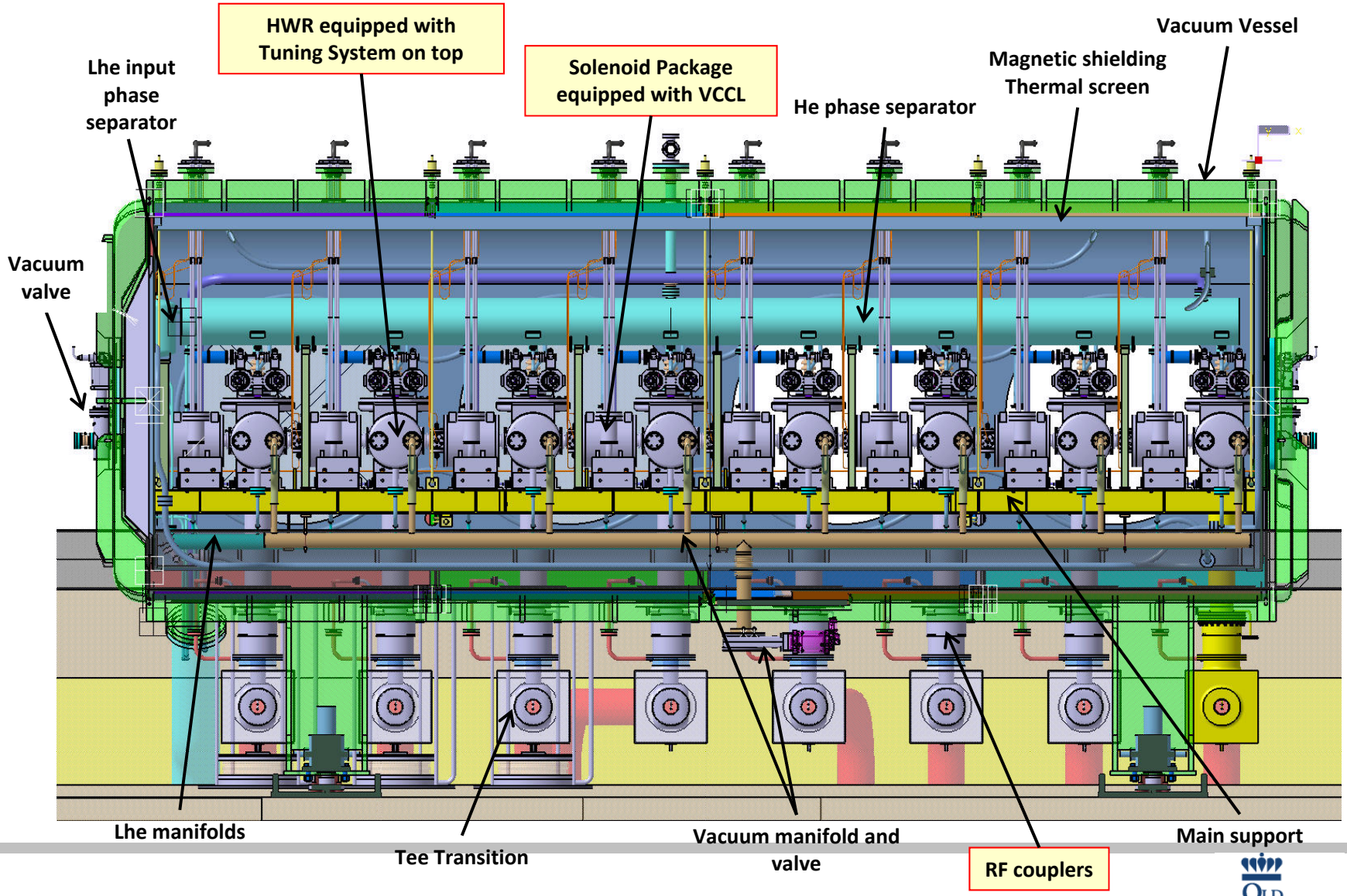

Accelerator Driven Systems

EU-ADS

(Courtesy of Jean-Luc Biarrotte, IPN, Orsay)

- (EU) ETWG report on ADS, 2001
- (EU-FP5) PDS-XADS project (2001-2004)
- (EU-FP6) EUROTRANS programme (2005-2010)
- MYRRHA Project (Multi-purpose hYbrid Research Reactor for High-tech Applications at Mol (Belgium): ADS demonstrator to be operational in 2023, 2.5 mA 600 MeV CW
- Industrial transmuter (EFIT): ~20 mA, 800 MeV

ADS : EUROTRANS

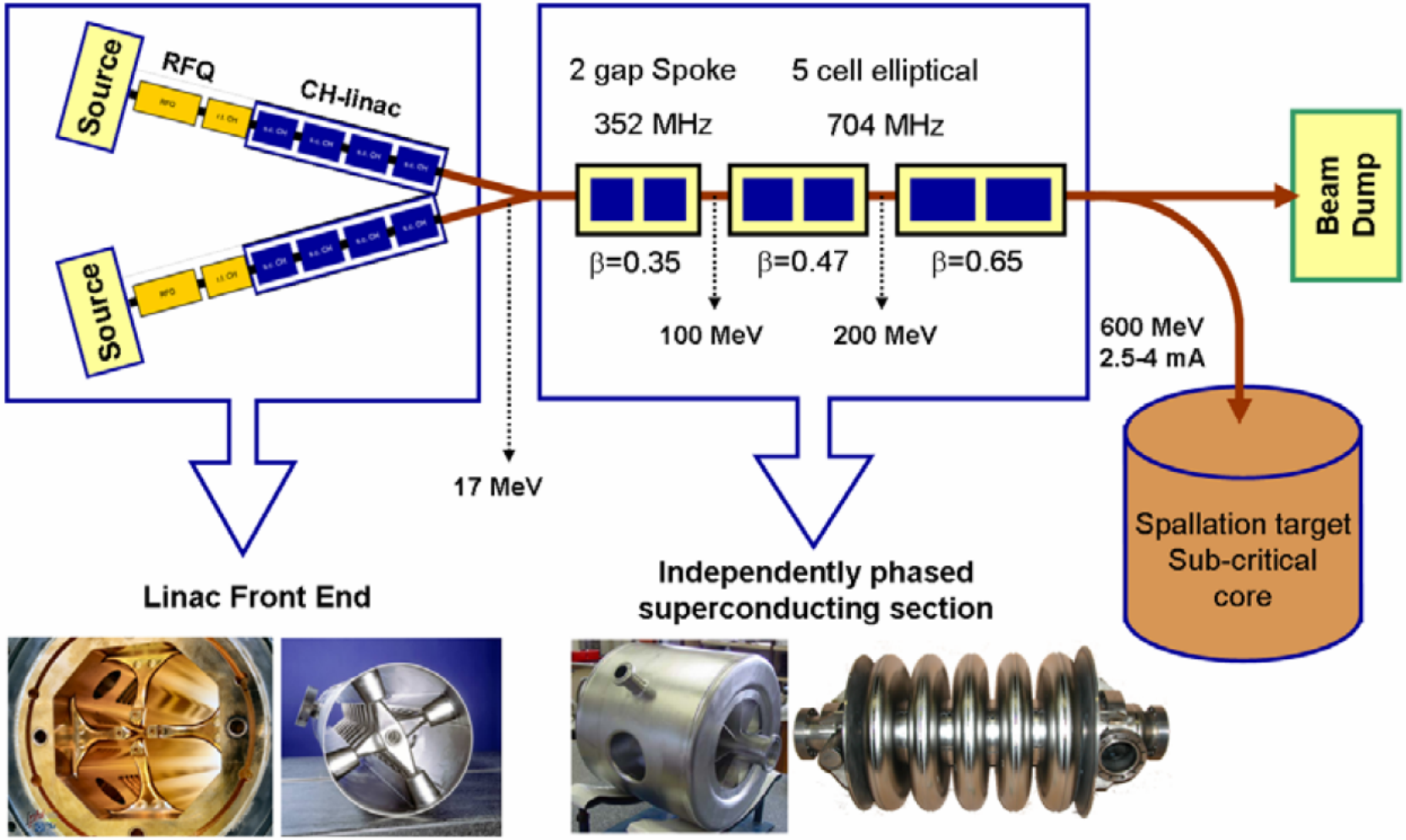

ADS : MYRRAH

MYRRAH (Courtesy of Jean-Luc Biarrotte, IPN, Orsay)

Main features of the ADS demo

~70 MWth power

k_{eff} around 0.95

600 MeV, 4 mA proton beam

Highly-enriched MOX fuel

Pb-Bi Eutectic coolant & target

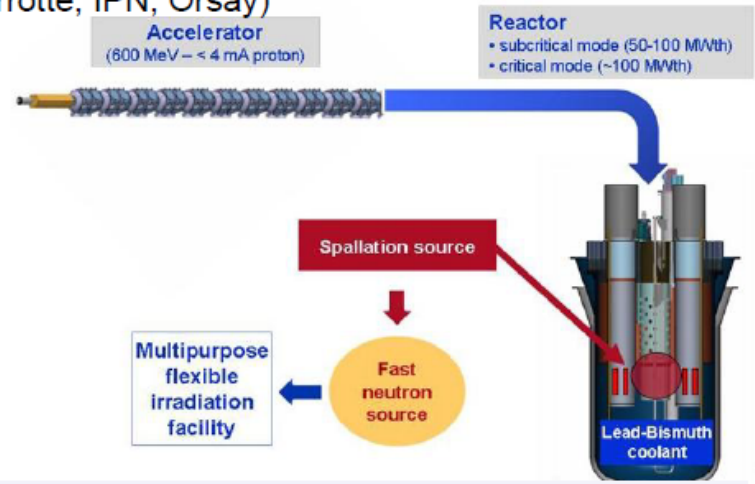

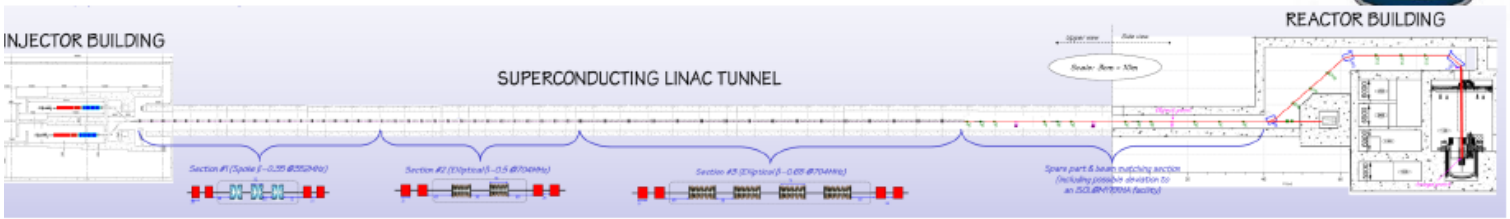

Independently-phased SC linac

- 352 MHz spoke & 704MHz elliptical
- low gradients, fast fault-tolerance capabilities expected

Section number	1	2	3
Input energy (MeV)	17.0	86.4	186.2
Output energy (MeV)	86.4	186.2	605.3
Cavity technology	Spoke 352.2 MHz	Elliptical 704.4 MHz	
Cavity geometrical β	0.35	0.47	0.66
Cavity optimal β	0.37	0.51	0.70
Nb of cells / cavity	2	5	5
Focusing type	NC quadrupole doublets		
Nb of cavities / cryomodule	3	2	4
Total nb of cavities	63	30	64
Acc. field (MV/m @ opt. β)	5.3	8.5	10.3
Synchronous phase (deg)	-40 to -18	-36 to -15	
5mA beam loading / cav (kW)	1 to 8	3 to 22	17 to 38
Section length (m)	63.2	52.5	100.8

17 Managed by UT-Battelle for the U.S. Department of Energy

ADS : Chinese Road Map

2 Spoke types: 10-165 MeV (325 MHz)
2 Elliptical types: 165-1500 MeV (650 MHz)

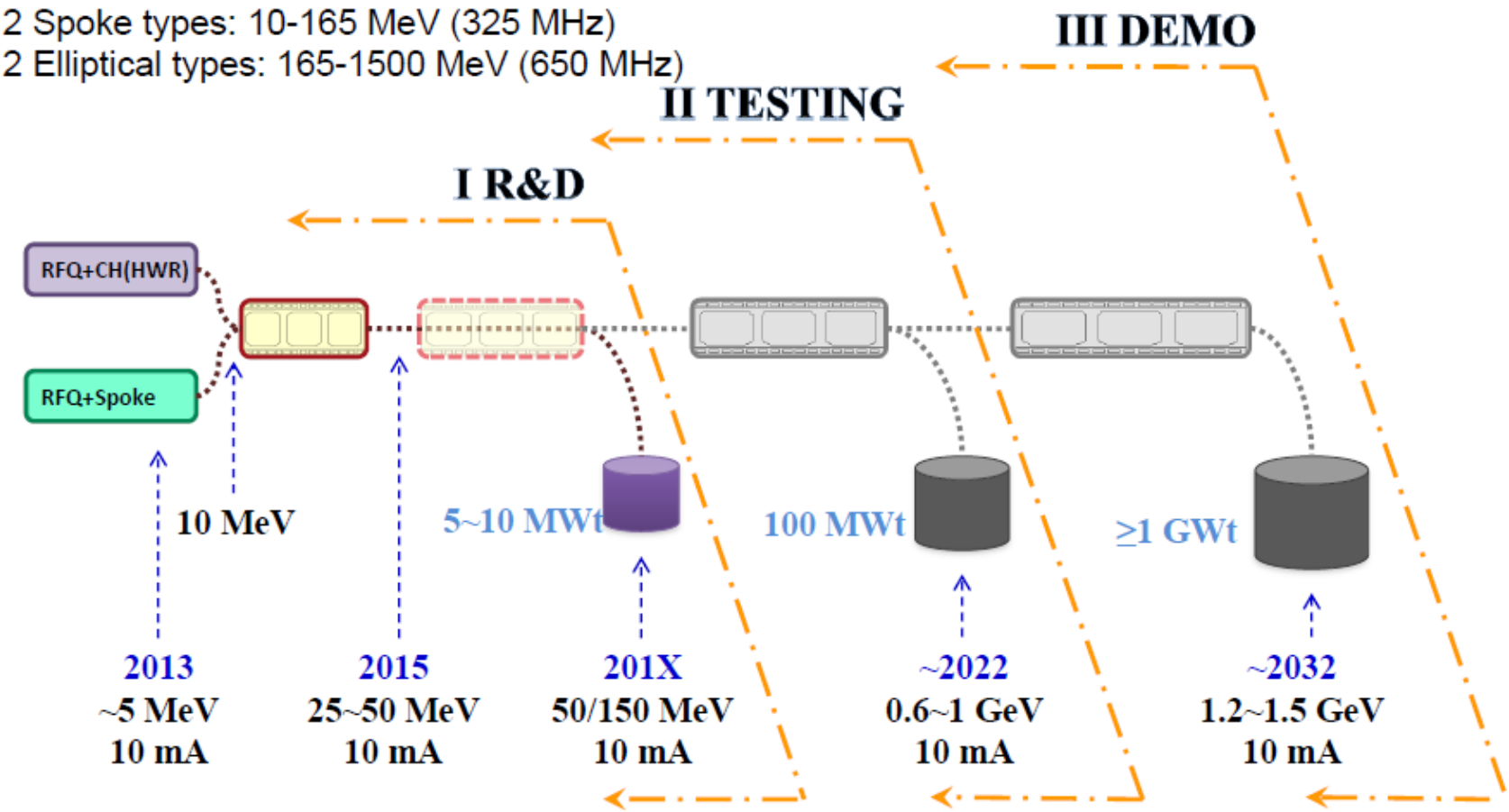

C-ADS is being developed by CAS. IHEP and IMP are in charge of proton accelerator. The facility is dedicate for transmutation and subcritical reactor. The project will be three stages. It is for technology R&D in the first 5 ~ 7 years.

XFEL:Accelerator Complex 17.5 GeV Version

100 accelerator modules

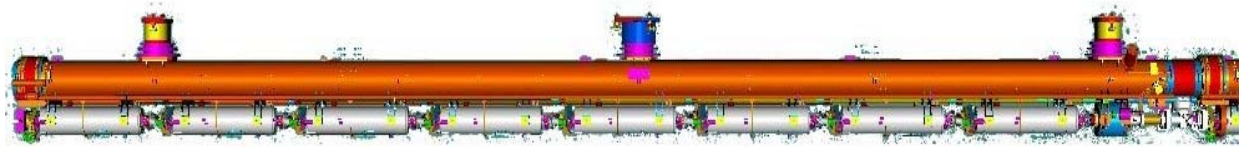

800 cavities + power couplers
1.3 GHz / 23.6 MV/m

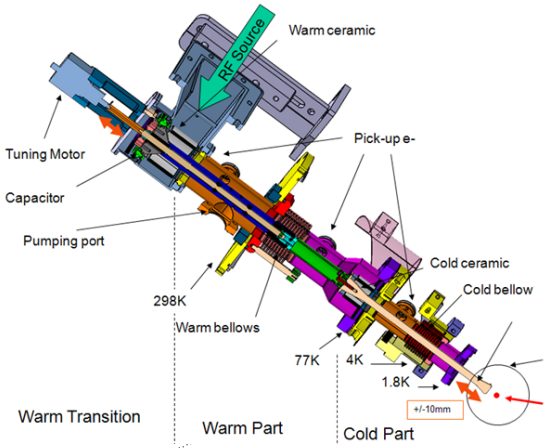

25 RF stations
5.2 MW each

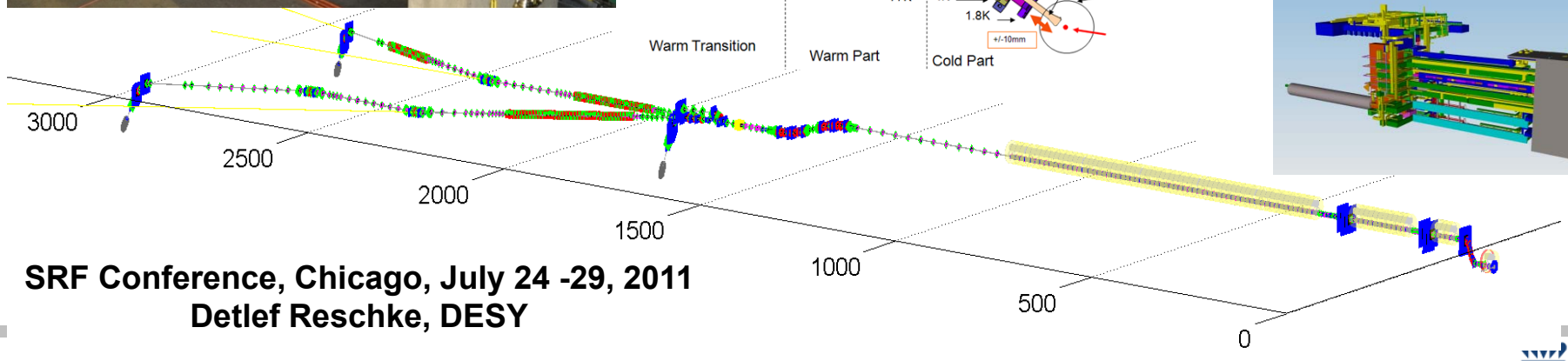

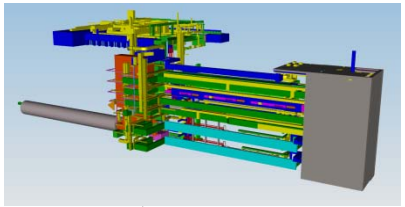

SRF Conference, Chicago, July 24 -29, 2011
Detlef Reschke, DESY

XFEL Collaboration

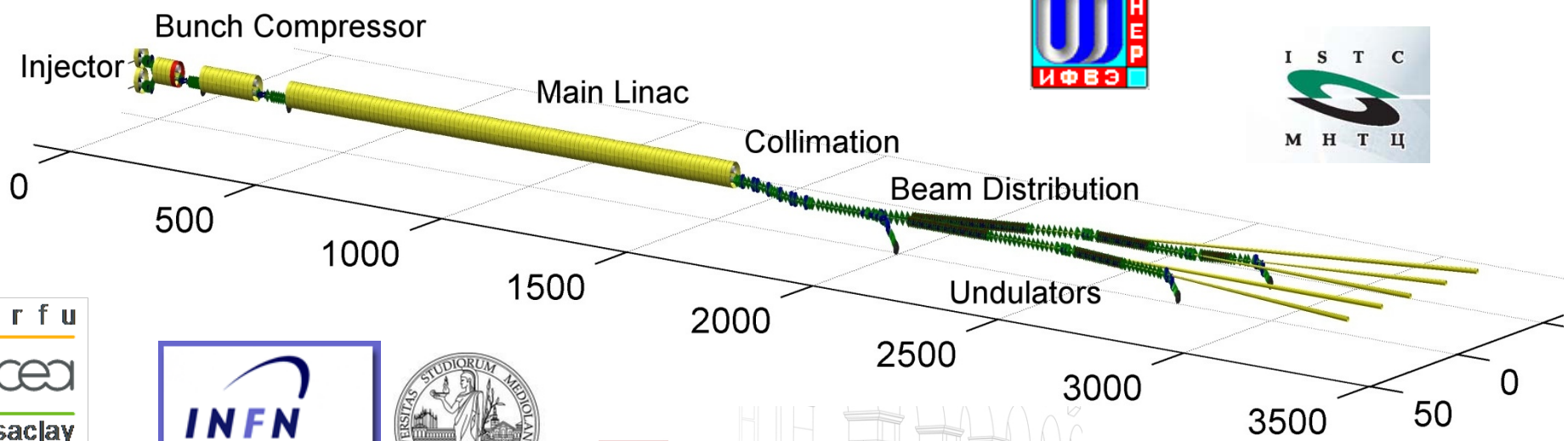

XFEL String and Module

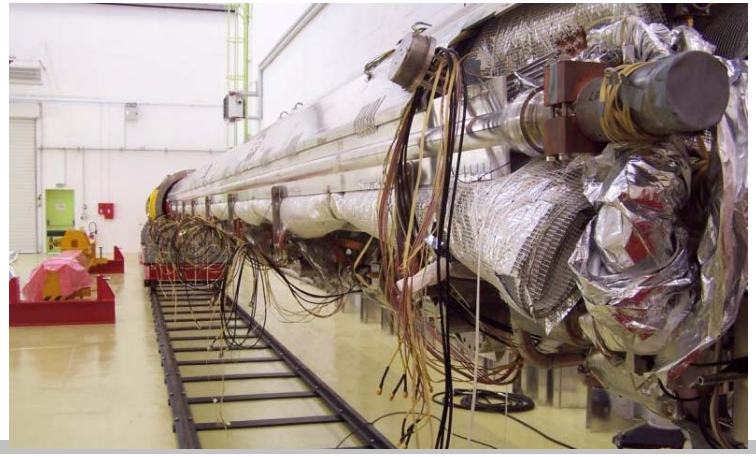

Module: Cavity String Assembly

String assembly is crucial for the cavity performance

String + power coupler assembly for all modules will take place at CEA Saclay site

Commissioning of infrastructure and training of CEA staff with prototype modules ongoing

Knowledge transfer to executing company to be done after placing of order

Compact Light Sources

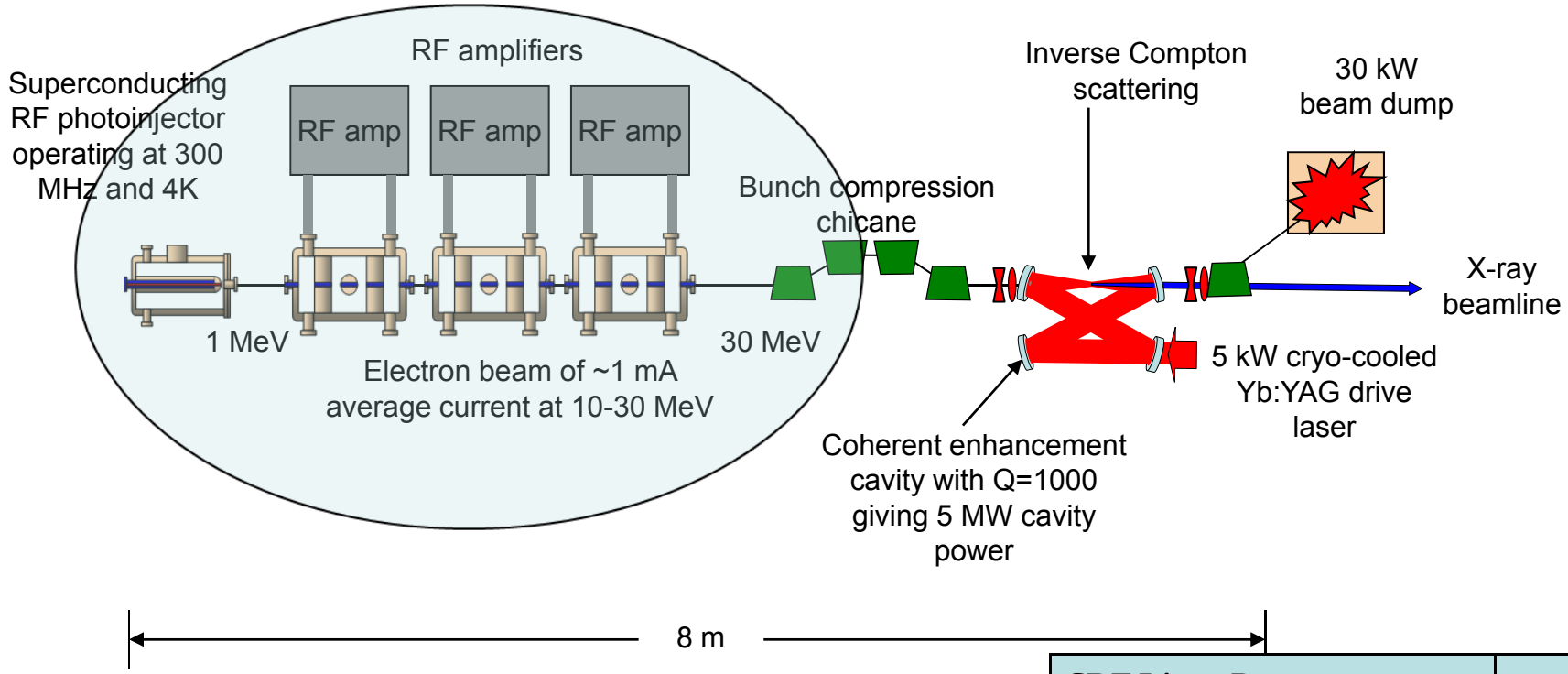

SRF Linac Parameters	
Energy gain [MeV]	25
RF frequency [MHz]	352
Average current [mA]	1
Operating temperature [K]	4.2
RF power [kW]	30

Crabbing/Deflecting Systems

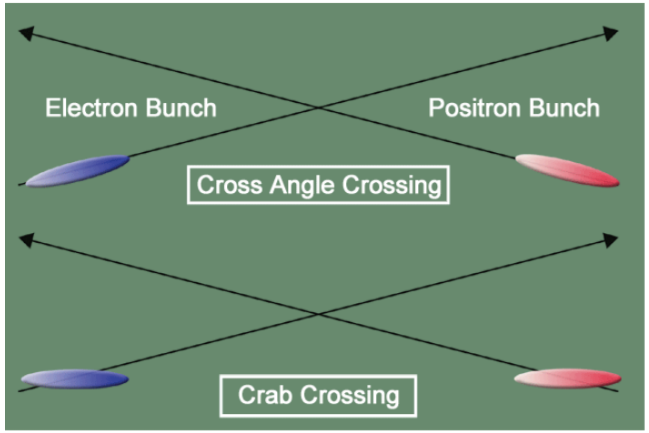

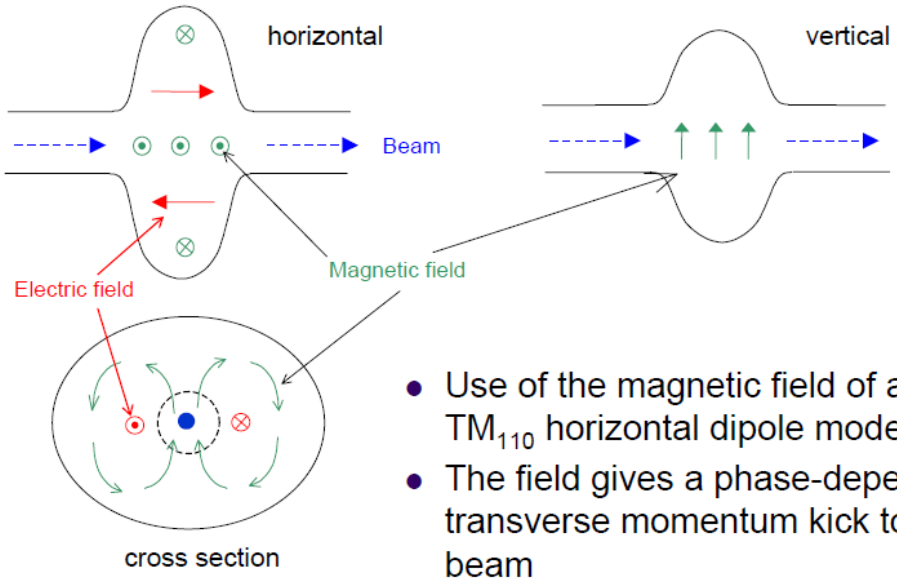

- Use of the magnetic field of a TM_{110} horizontal dipole mode
- The field gives a phase-dependant transverse momentum kick to the beam

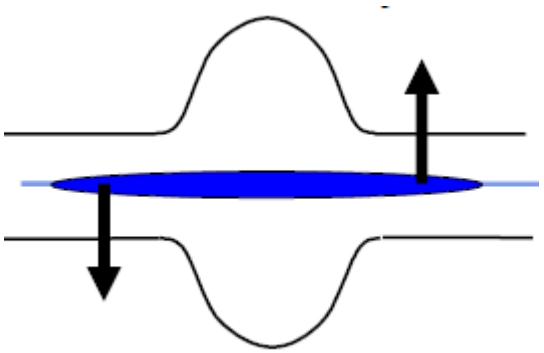

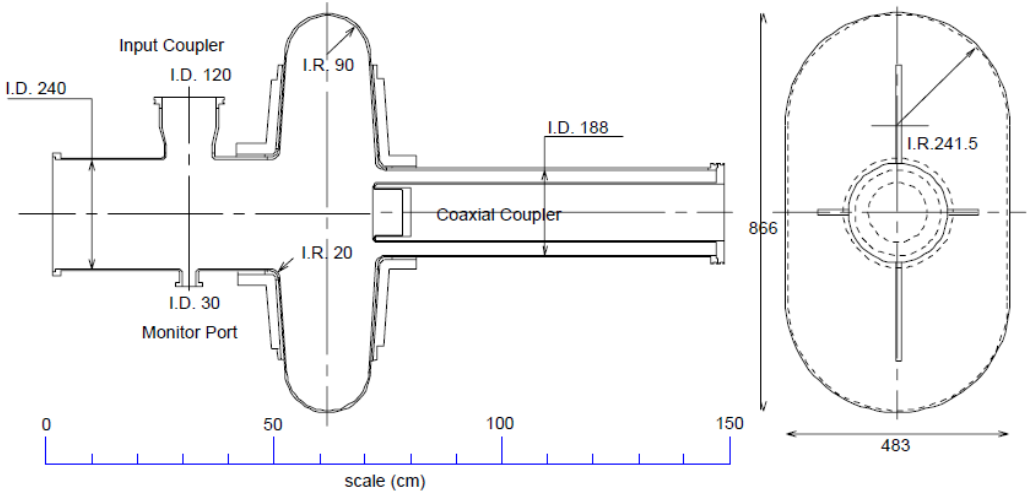

Crabbing/Deflecting Systems

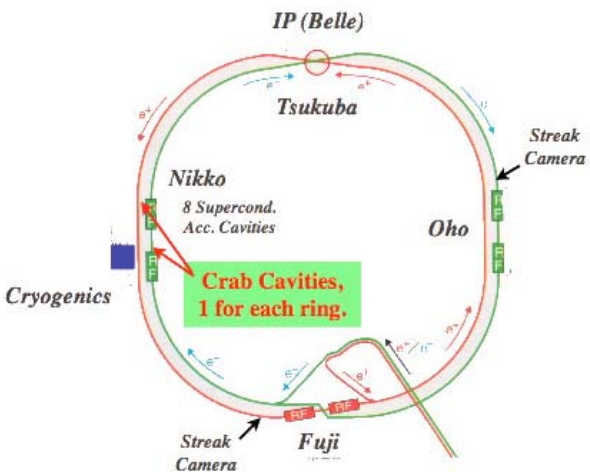

Installation of Crab Cavities
for HER Jan. 8, 2007,
for LER Jan. 11, 2007

Crab Cavity for HER

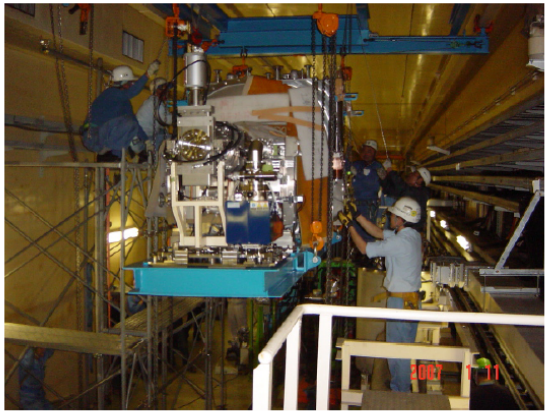

Carrying the Crab cavity using crane track

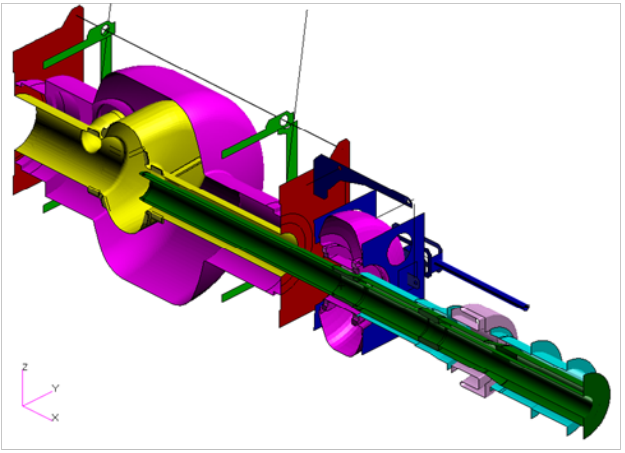

Cool-down of Crab Cavities
Jan. 29 , 2007
Beam Operation Start
Feb. 13

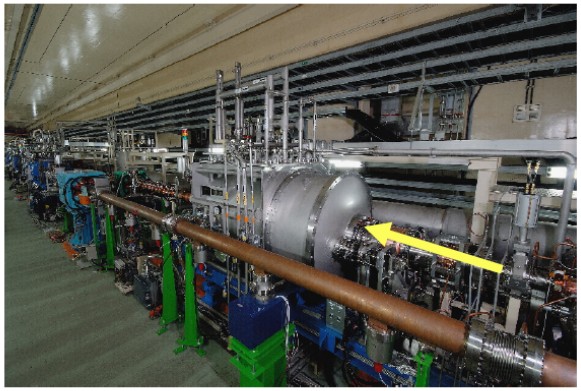

Crab Cavity for LER

LHC Upgrade Crabbing System

	Baseline	Unit	LHC	KEK-B
RF	Frequency	MHz	400 (800)	509
	Deflecting Voltage	MV/Cav	5	2.0 (0.9-1.5)
	Peak E-field	MV/m	< 45	28
	Peak B-field	mT	< 80 mT	82 mT
Geometrical	Aperture (diameter)	mm	84	130
	Cav Outer Envelope	mm	< 150	866/483
	Module length	m	~ 1m	1.5 m
	HV crossing	-	Desirable	N/A
Optics	β^* (IR1/IR5)	cm	15-25	63/0.7
	β crab	km	~ 5	0.2/0.04
	Non-linear harmonics	Units [10^{-4}]	2-3	N/A
	Impedance Budget	Longitudinal, Transverse	60kΩ, 2.5MΩ/m	-

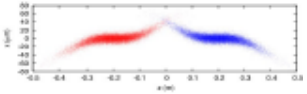

$\sigma_z = 7.55$ cm

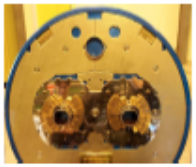

Beam-beam separation

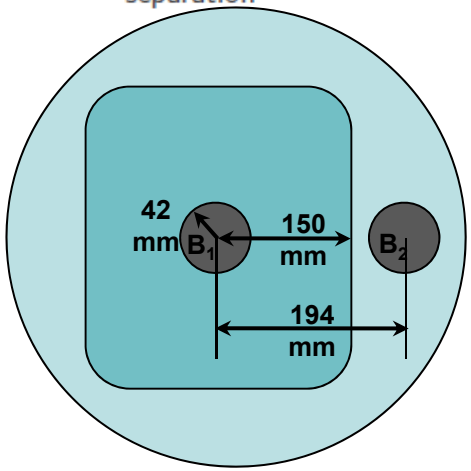

Properties of 400 MHz Crabbing Cavities for LHC

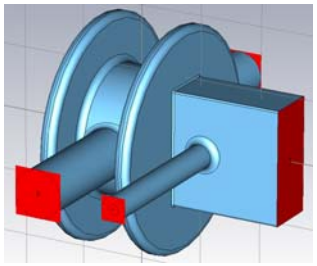
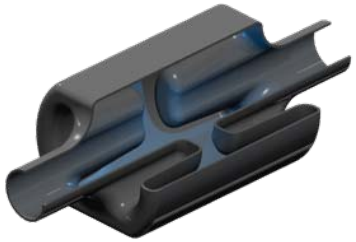
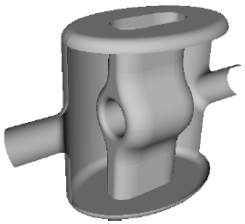
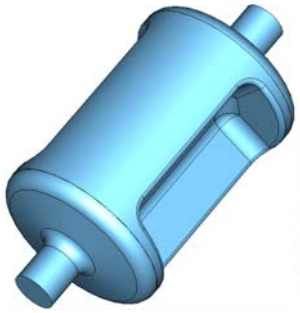
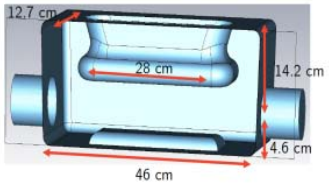

	Reel	4-rod	Half-wave	Par-bar/ Ridged	Quarter-wave
	KEK	U. Lancaster	SLAC	ODU	BNL
E_p/E_t	10.9	4	3.9	3.8	7.2
B_p/E_t mT/(MV/m)	18.7	7.6	7.3	7.1	16.5
R/Q Ω		765	215	312	132

Aperture : 84 mm

$E_t = 2V_t/\lambda$ $V_t = 375$ kV at $E_t = 1$ MV/m

SRF Technology

- The SRF technology is increasingly becoming the technology of choice for an increasing number of accelerator applications
- Steady progress has been made
- We are beginning to bump into the fundamental limits of the niobium-based technology
  - Still struggling with repeatability and consistency
  - Process and procedure control
- The next frontier is new materials
  - Niobium alloys
  - High Tc materials