TimePix AIDA Integration meting

- How and Why do we integrate Timepix and the AIDA telescope?
  - Timepix provides an alternative/additional way to FEI4 of timestamping telescope tracks
    - Accumulate many (~300) tracks per shutter
    - Gives a rough timestamp to be refined with a scintillator coincidence
    - Provides ~4 um per plane precision in both coordinates
    - Can deal with high rates and LHC style pileup
- In order to benefit from this Timepix has to be integrated with the telescope arm (not just plugged in as a DUT)
- Proposal: to start by integrating one Timepix plane
- If this is desired by the communities implies modifications to hardware and software

Timepix Arm Performance Summary

- 1.7μm spatial resolution
- 1ns timing resolution
- Up to 5kHz track rate
- >1Mhz instantaneous beam rate

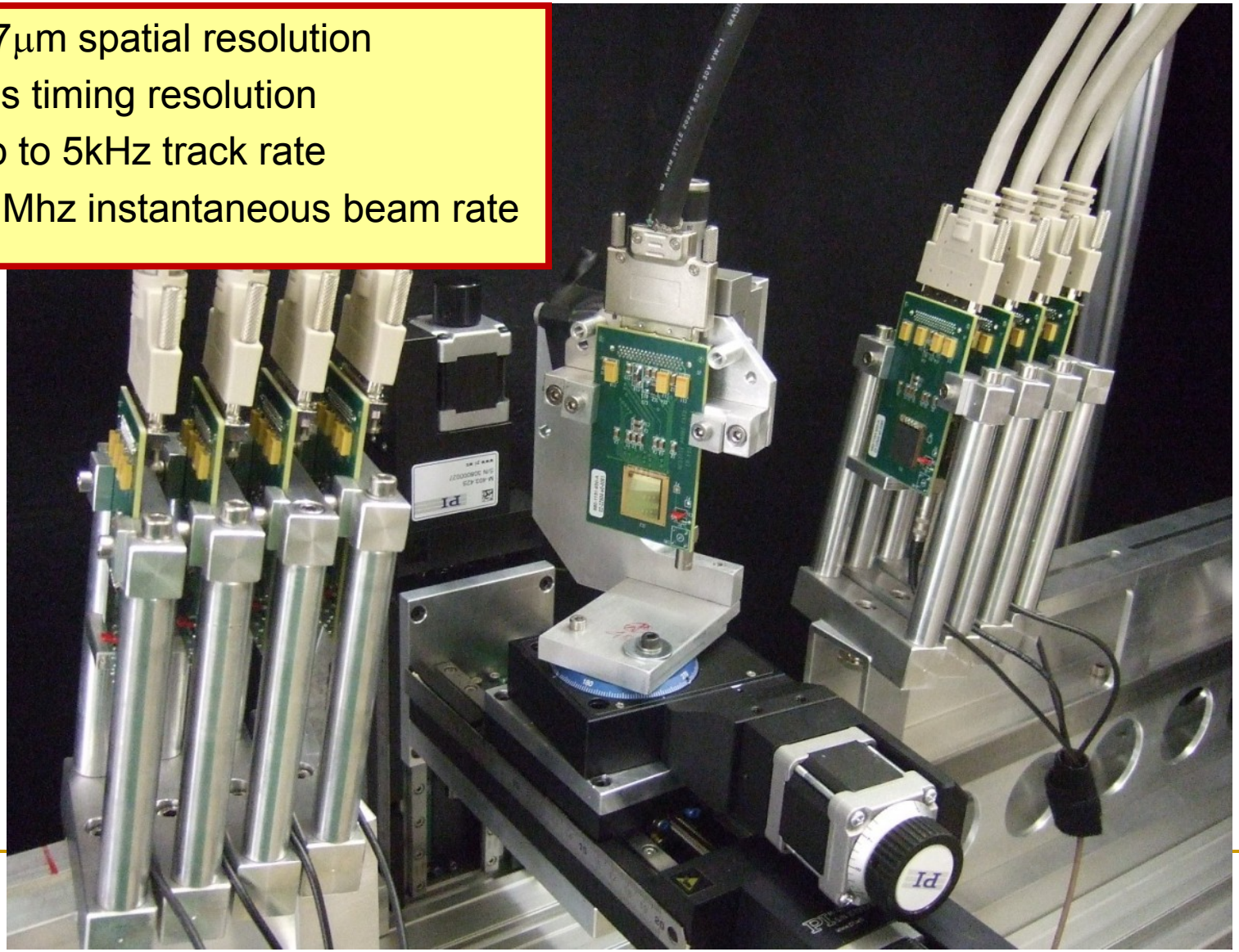

The TLU at the heart of the system

- Good opportunity to get all user requirements in e.g.
  - Good efficiency measurement in DUT
  - 25 ns Pileup trigger possible
  - Possibility of “fake” running for tuning up system without beam or making noise threshold scans
  - Automatic spill detection
  - Limit number of triggers per shutter
  - Fixed shutter length
  - Wait times…

Current implementation in Timepix Telescope

- Asynchronous SPS beam not suited to LHC systems designed for 25ns bunch structure
- Implemented a TDC which with Timepix ToA mode gives us ~1ns per track time stamping
- Able to provide and record synchronised triggers to 40MHz readout systems (TELL1)
- Allows software reconstruction and analysis of asynchronous tracks

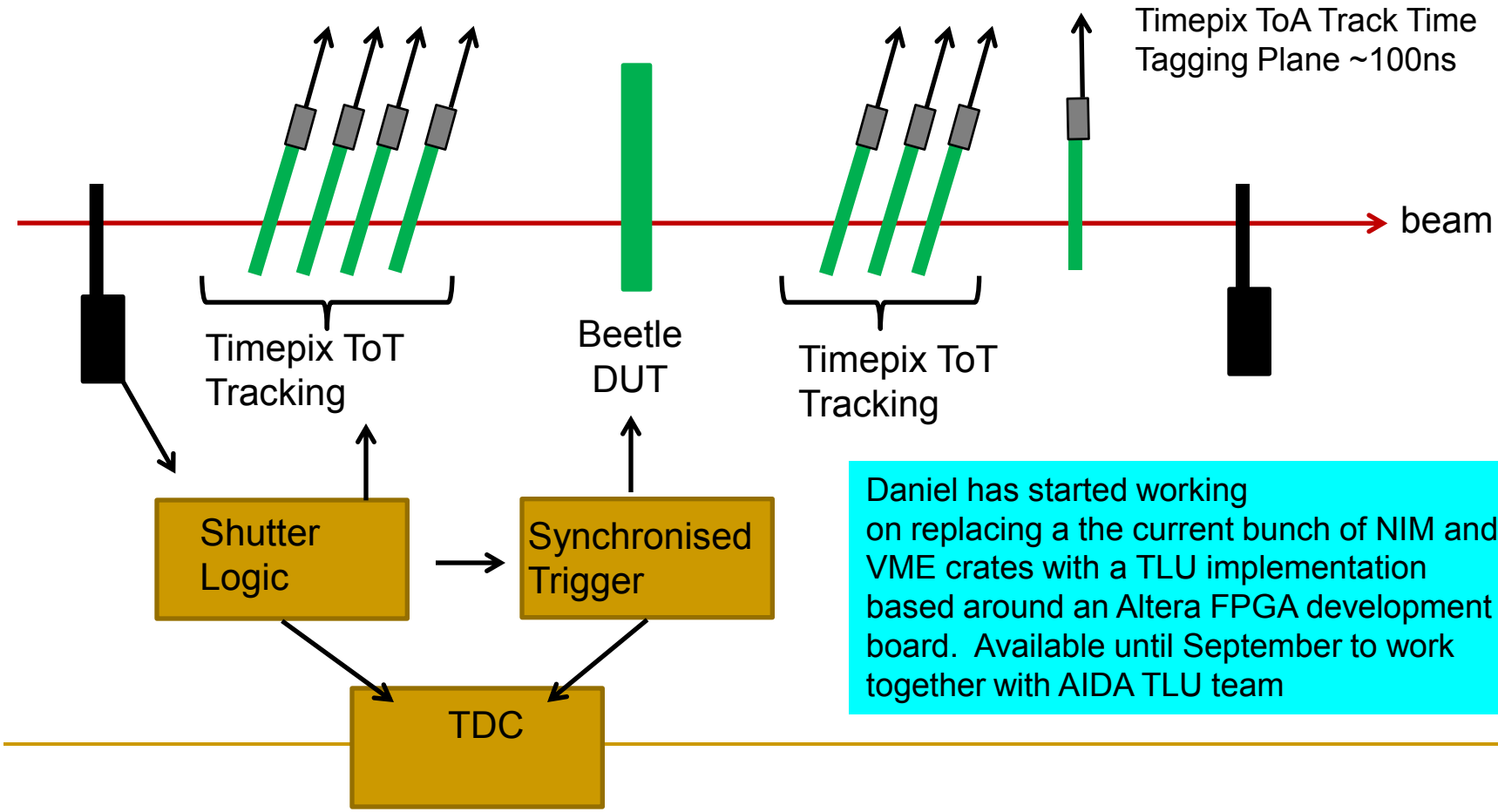

Daniel has started working on replacing a the current bunch of NIM and VME crates with a TLU implementation based around an Altera FPGA development board. Available until September to work together with AIDA TLU team