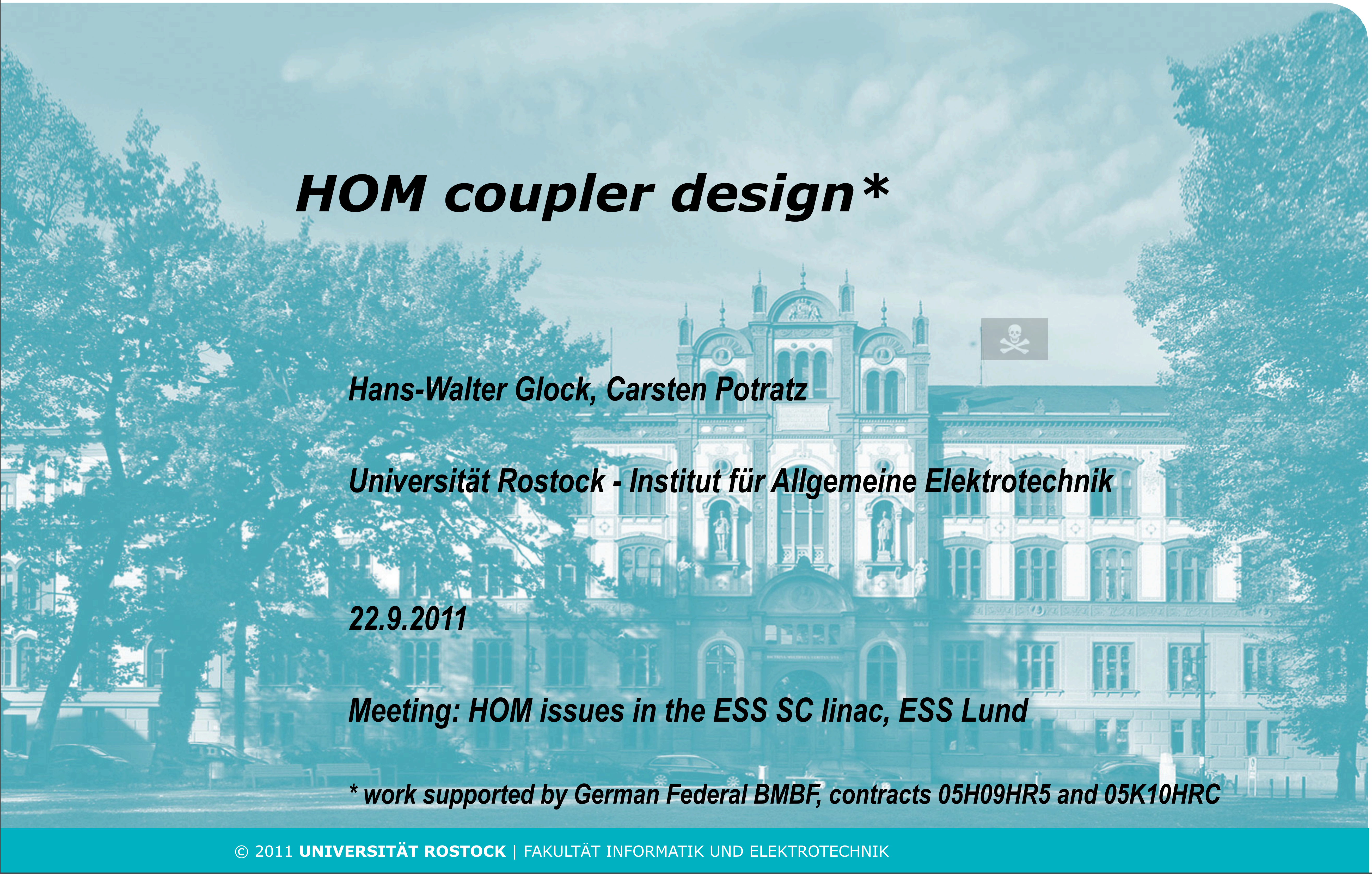

HOM coupler design*

Hans-Walter Glock, Carsten Potratz

Universität Rostock - Institut für Allgemeine Elektrotechnik

22.9.2011

Meeting: HOM issues in the ESS SC linac, ESS Lund

* work supported by German Federal BMBF, contracts 05H09HR5 and 05K10HRC

Overview

- "Once upon a time" - brief history of Rostock's coupler design ...
- ... including some more general experiences
- Latest SPL/(ESS) version
- Sensitivity to main parameters, current density, ideas of mechanical resonances
- Some coupler olympics: Rama's TESLA-style in comparison with hook-type
- explicitly excluded: multipacting issues (hook type has an issue!) => Steve's/Rob's talk

"History" of developments I (primarily focussed on SPL β=1)

"left" side HOM coupler port
rotated by 60° towards you
(not drawn)

"right" side HOM coupler port
opposed to power c., D= 36mm

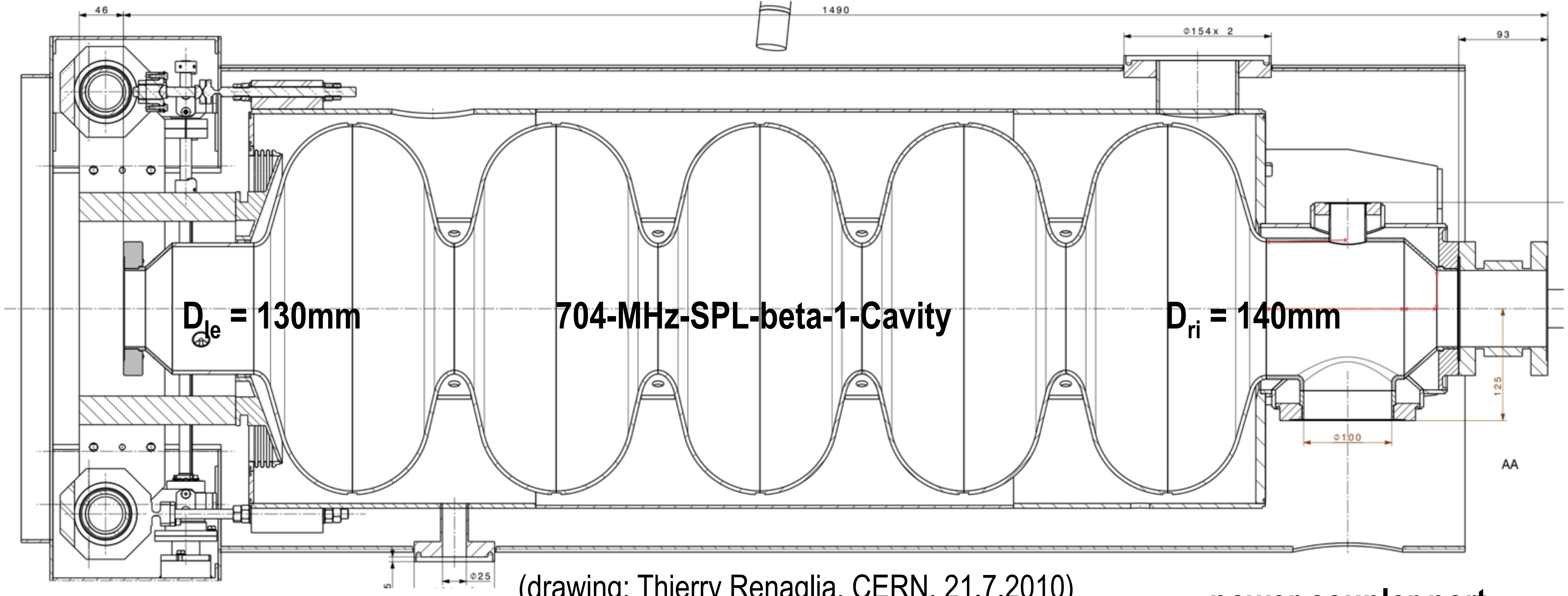

D_{le} = 130mm

704-MHz-SPL-beta-1-Cavity

D_{ri} = 140mm

D_{pipe} = 80mm

(drawing: Thierry Renaglia, CERN, 21.7.2010)

power coupler port
D=100mm

"History" of developments I (primarily focussed on SPL β=1)

① when $Q_{HOM} > 10^7$ seemed to be acceptable

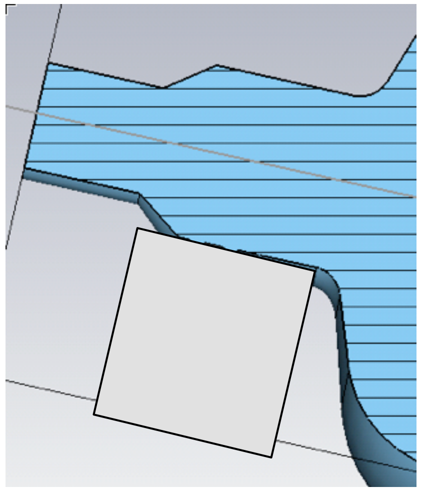

② when couplers seem unavoidable but should as simple as possible

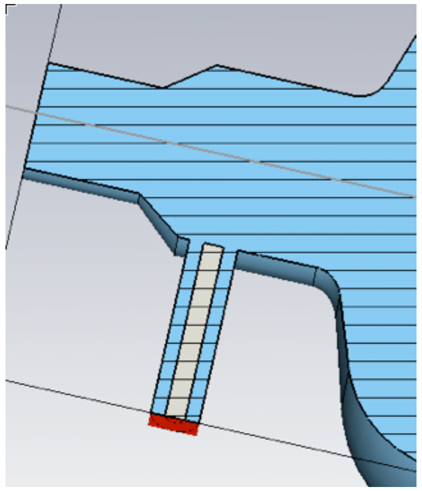

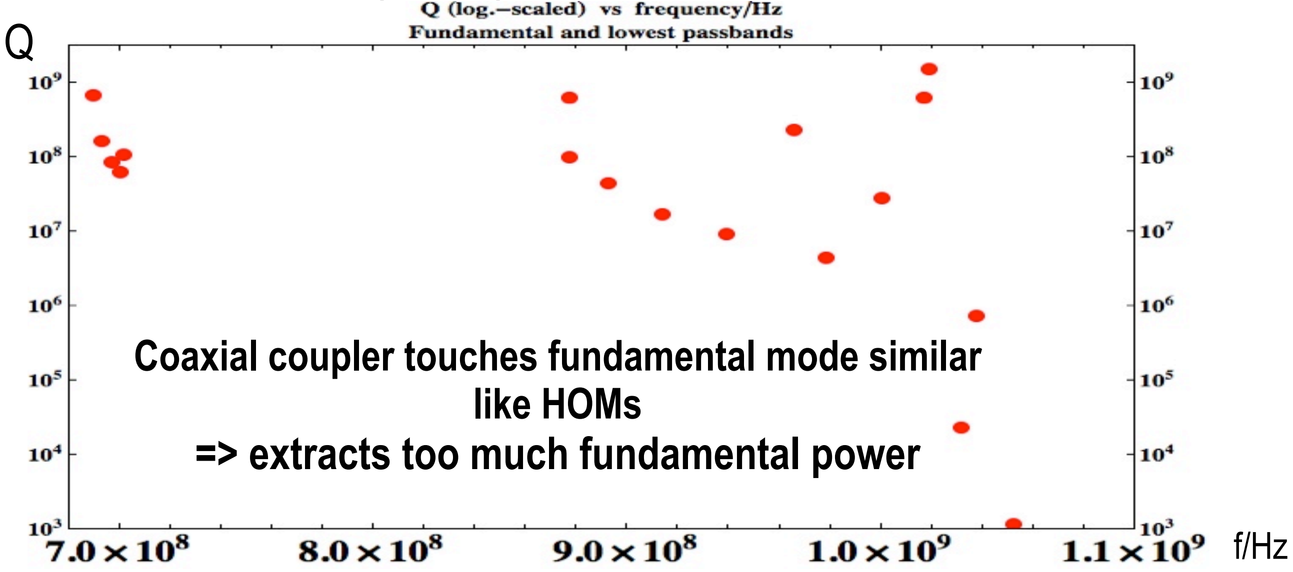

Coaxial coupler touches fundamental mode similar like HOMs

=> extracts too much fundamental power

③ when we therefore introduced a fundamental mode filter

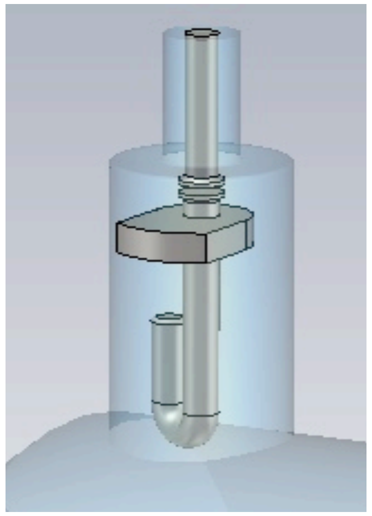

④ where we had to add a less elegant capacity enhancement for adjusting notch frequency

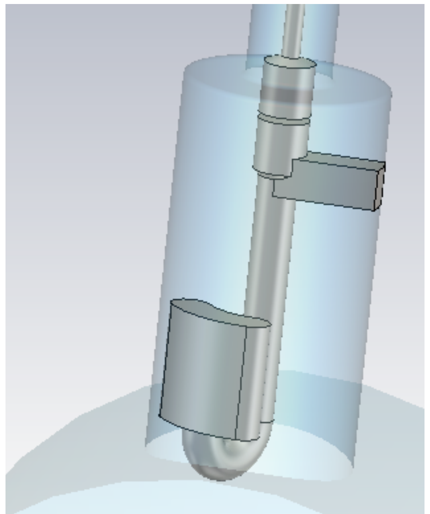

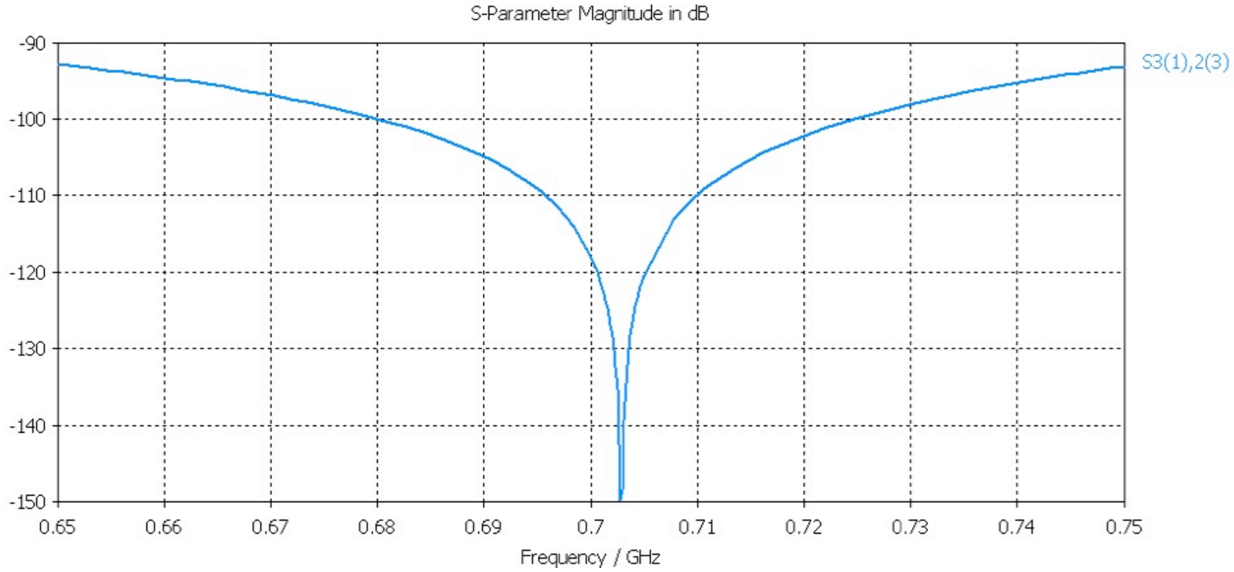

History II: Lessons learned about fundamental mode notch filter

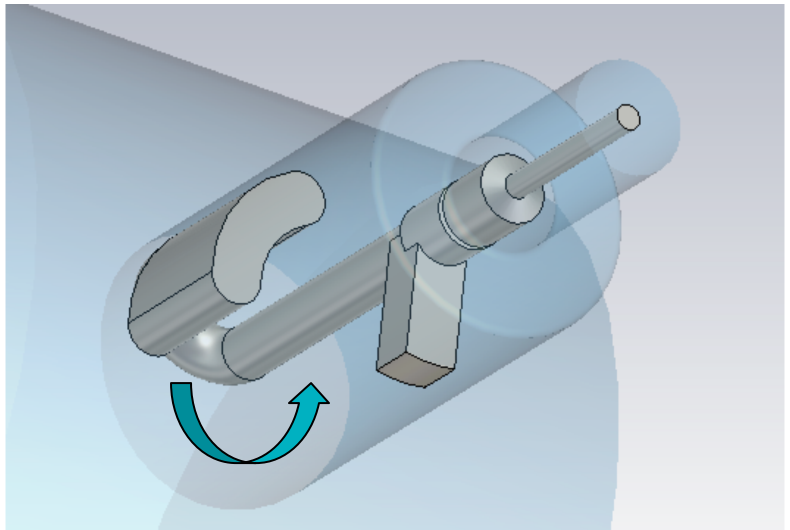

1.) Tuning rather sensitive both against capacity surface AND rotation angle (~5 MHz/Degree ⇔30 dB/Degree)

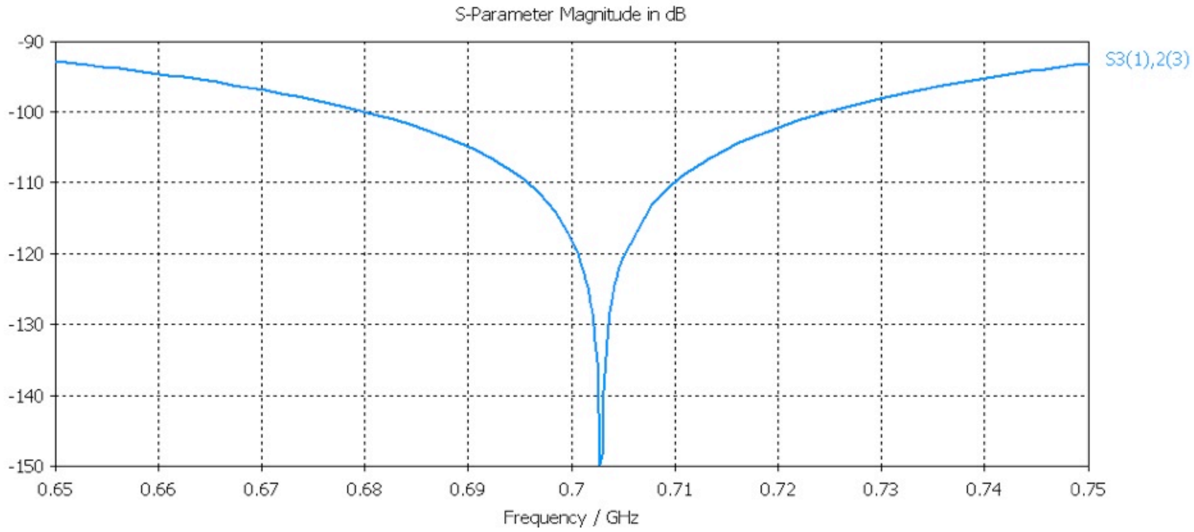

2.) => notch filter understood as combination of resonance AND "directional coupler"-effect: certain E-H-correlation causes cancelation

3.) This demands for external re-tuning capability after mounting (e.g. rotation)

"History" of developments III

still version ④:

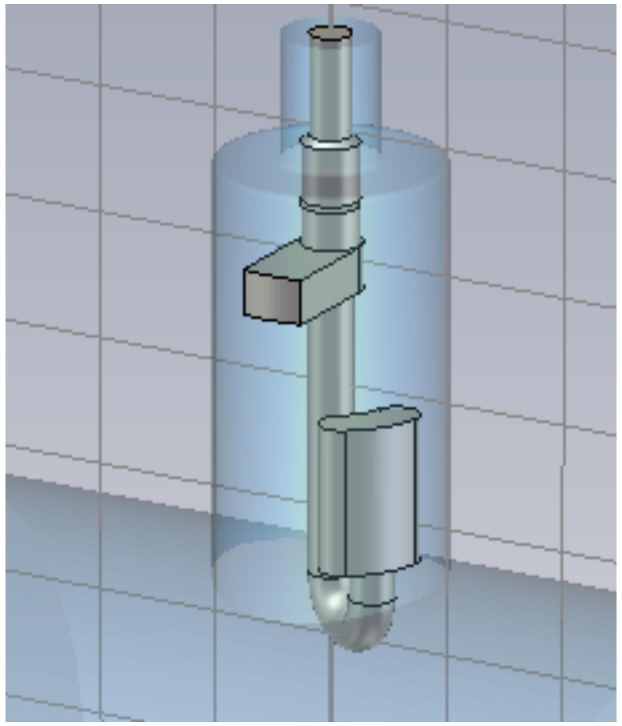

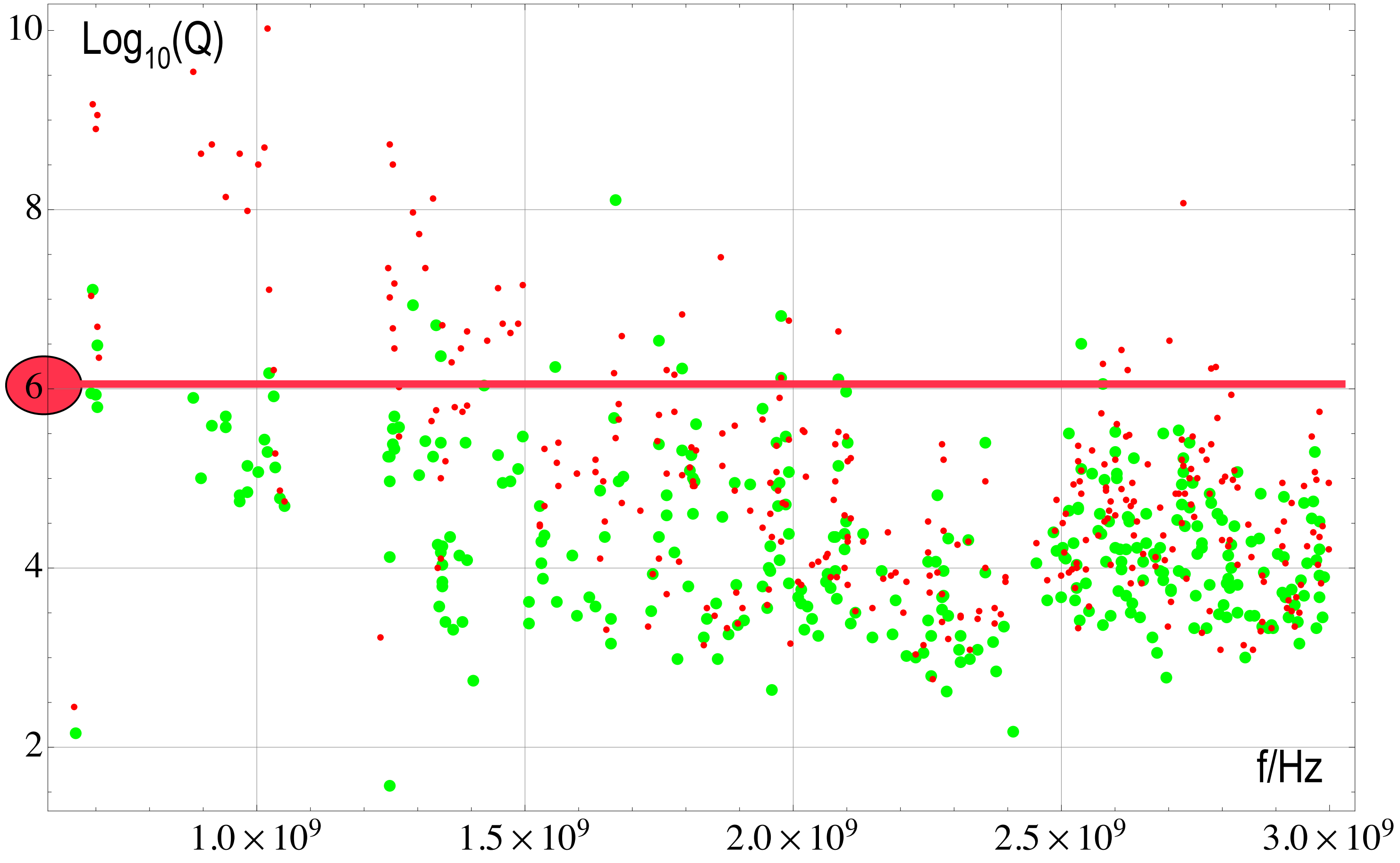

- red: HOM coupler only, green with matched power coupler
- main power coupler helps significantly below 2 GHz; still Qs > 10^6 found
- => extend depth and width of loop to increase coupling

History IV: Version ⑤

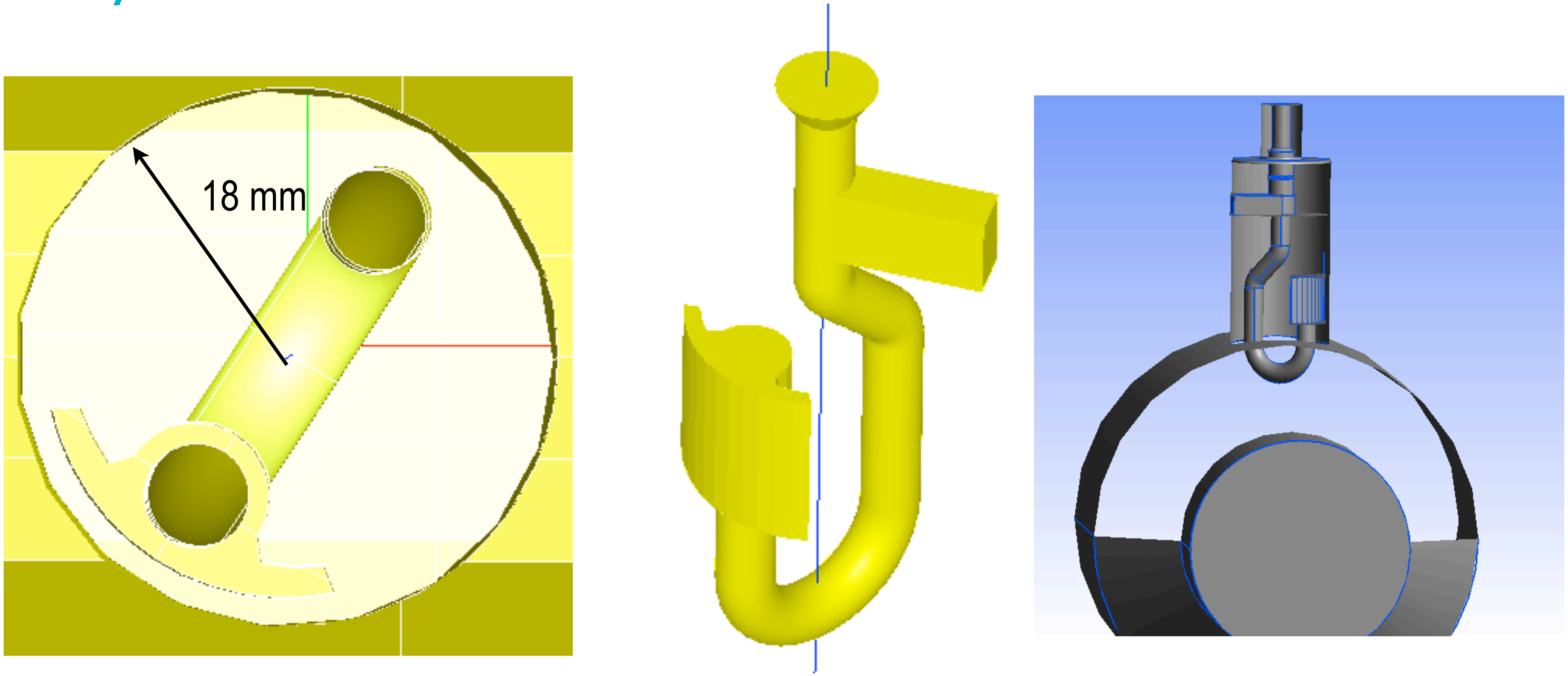

- several things changed: loop shape and lower bow radius, depth, capacity profile ...
- ... and computing method* (SALOME + NUDGE-based CUDA parallelized time domain iterator, C. Potratz)*

*: C. Potratz et. al.: Time Domain Field and Scattering Parameter Computation in Waveguide Structures by GPU-Accelerated Discontinuous-Galerkin Method, accepted for publishing in IEEE-MTT

Coupling dependency on penetration depth (Version ⑤)

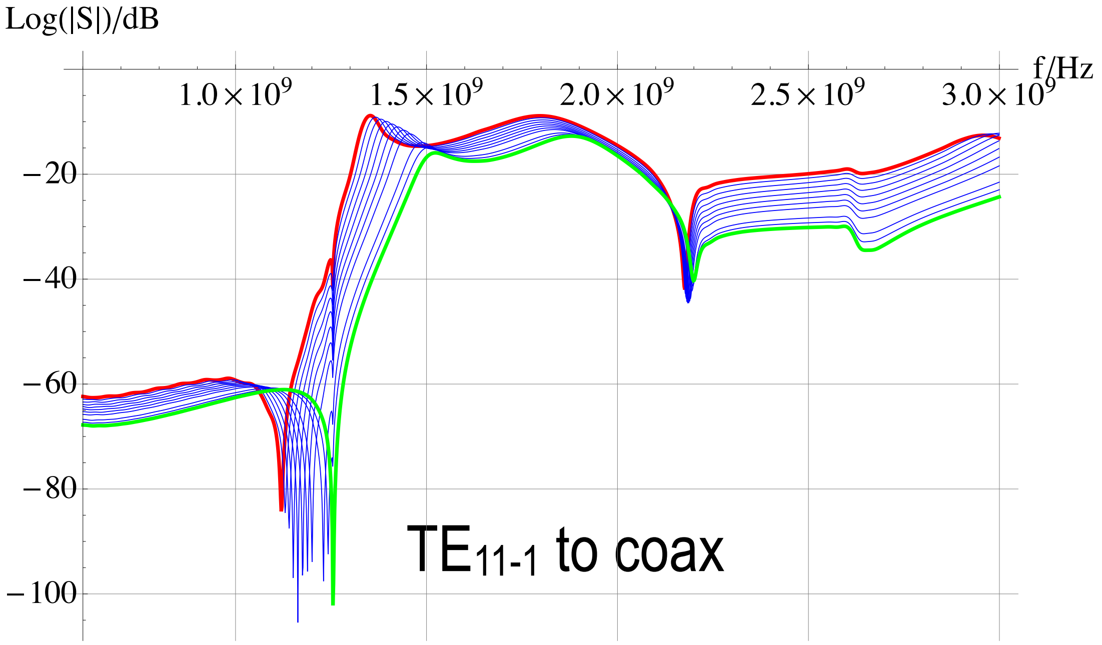

TE_{11-1} to coax

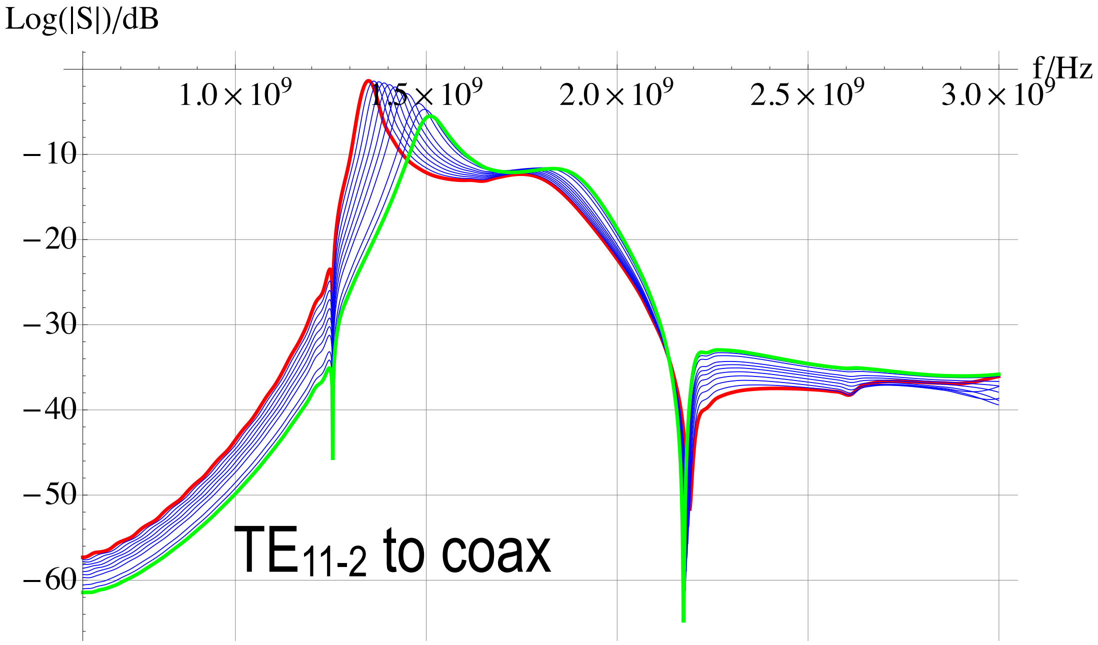

TE_{11-2} to coax

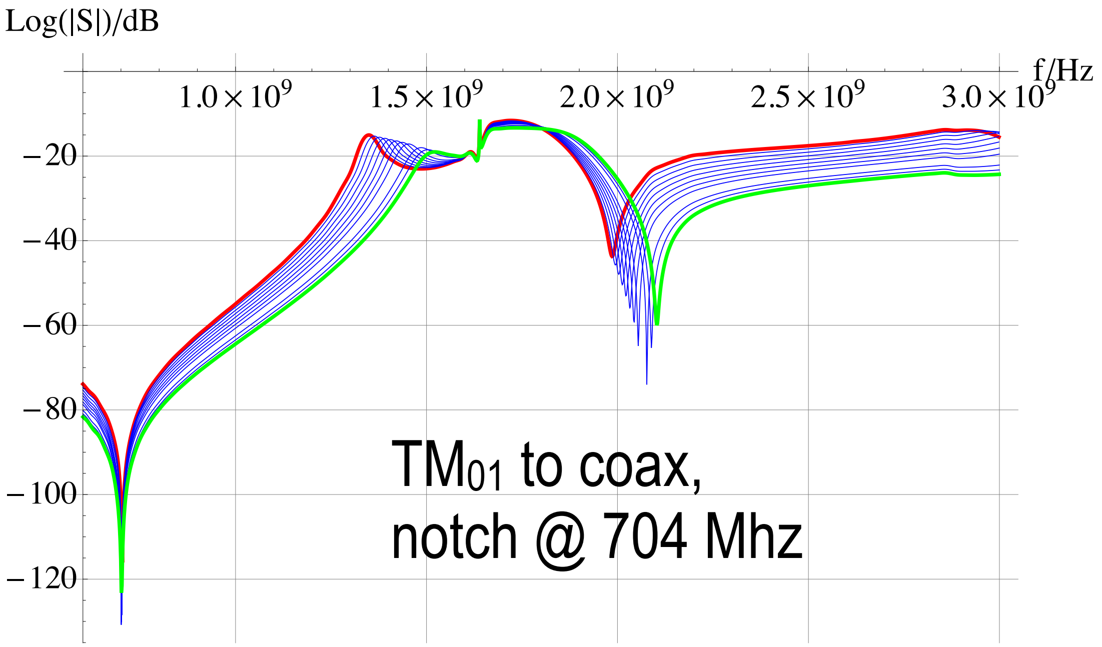

TM_{01} to coax,
notch @ 704 Mhz

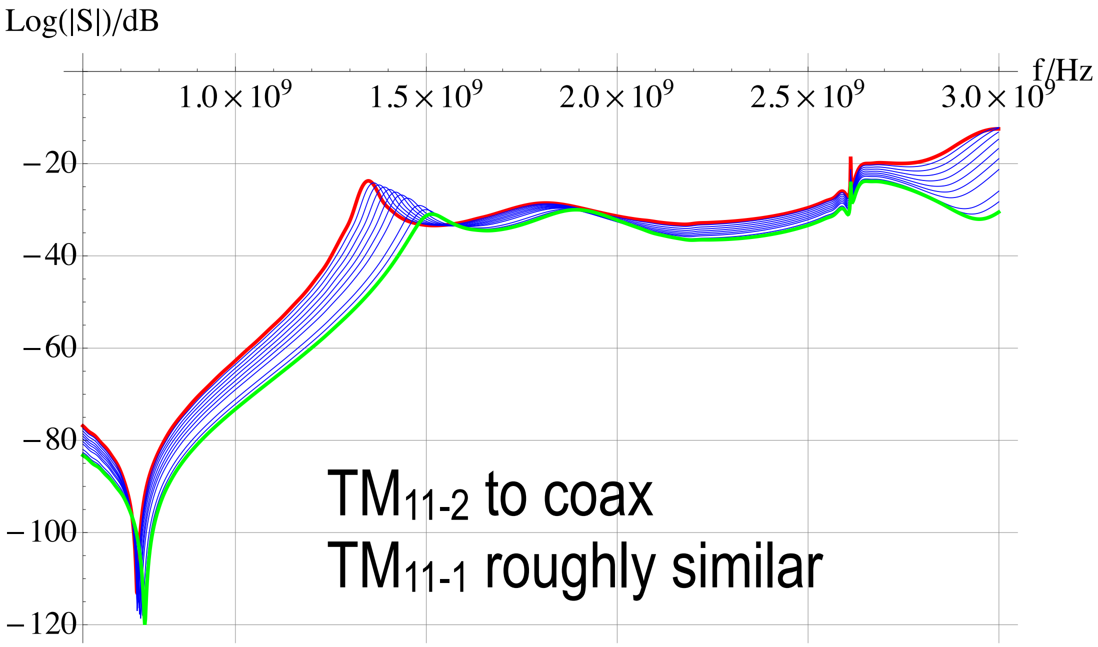

TM_{11-2} to coax
TM_{11-1} roughly similar

10 mm additional depth ~ very roughly +10dB coupling

Q-value distribution versions ④ and ⑤

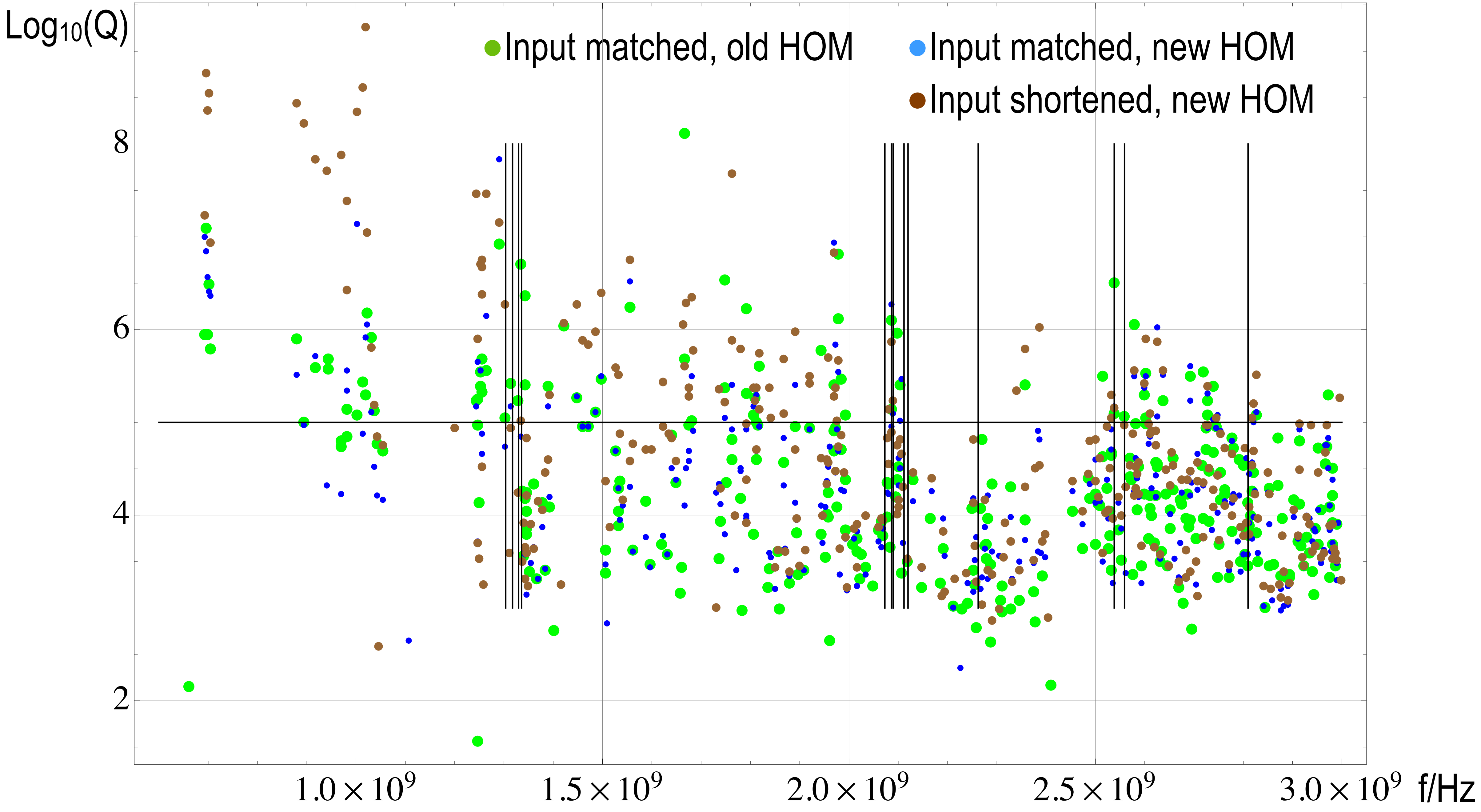

vertical lines: prominent monopoles according J. Plouin: SPL cavity design by CEA-Saclay, 3rd SPL Coll.-Meeting, 11-13 Nov 2009, CERN

Q-value distribution versions ④ and ⑤

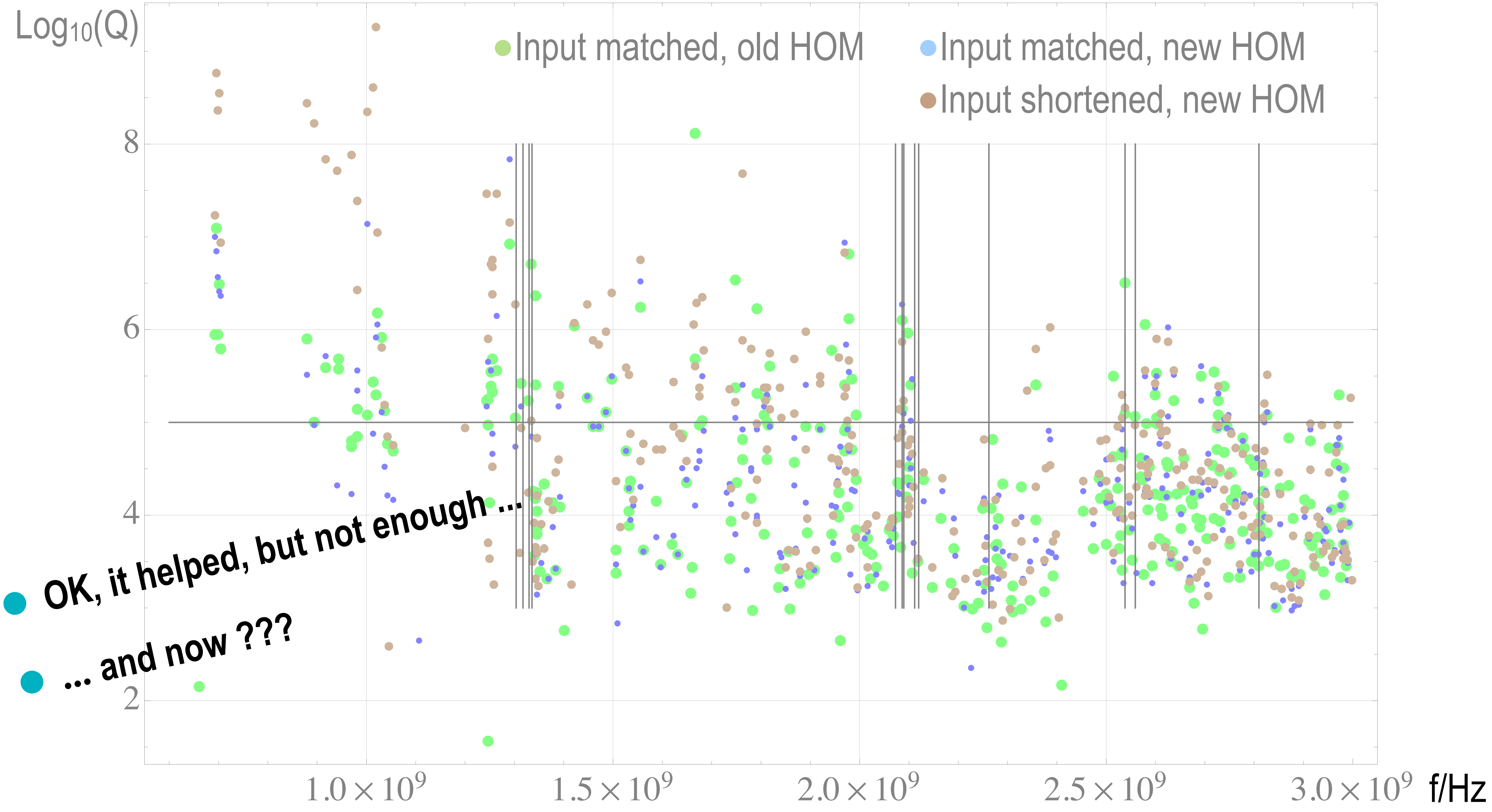

- OK, it helped, but not enough ...
- ... and now ???

vertical lines: prominent monpoles according J. Plouin: SPL cavity design by CEA-Saclay, 3rd SPL Coll.-Meeting, 11-13 Nov 2009, CERN

We were lucky:

- CERN decided (~June 2011) to increase HOM port diameter from 36 mm to 45 mm
- which also allowed an increased hook pipe diameter

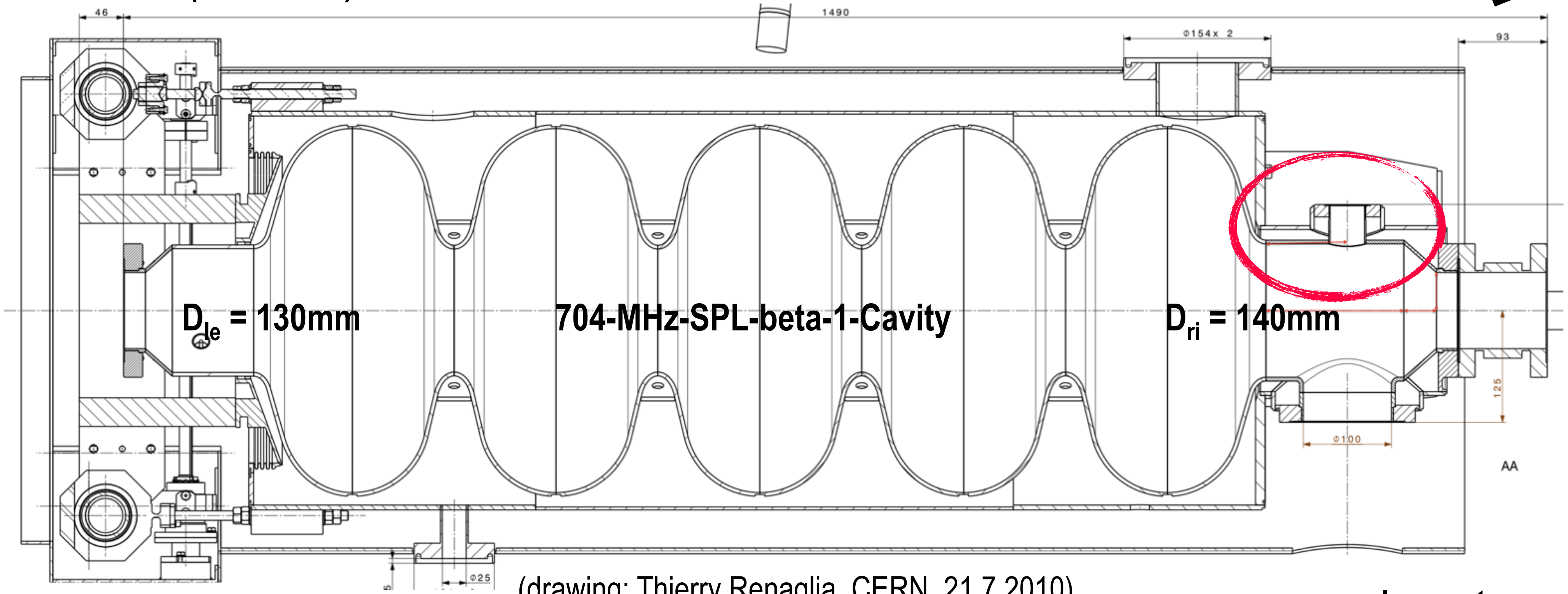

"left" side HOM coupler port rotated by 60° towards you (not drawn)

"right" side HOM coupler port opposed to power c., D= ~~36mm~~ 45mm

D_{le} = 130mm

704-MHz-SPL-beta-1-Cavity

D_{ri} = 140mm

D_{pipe} = 80mm

(drawing: Thierry Renaglia, CERN, 21.7.2010)

power coupler port D=100mm

Compare design alternatives

hook pipe diameter 7 mm @ 36 mm // 8 mm @ 45 mm // 10 mm @ 45 mm

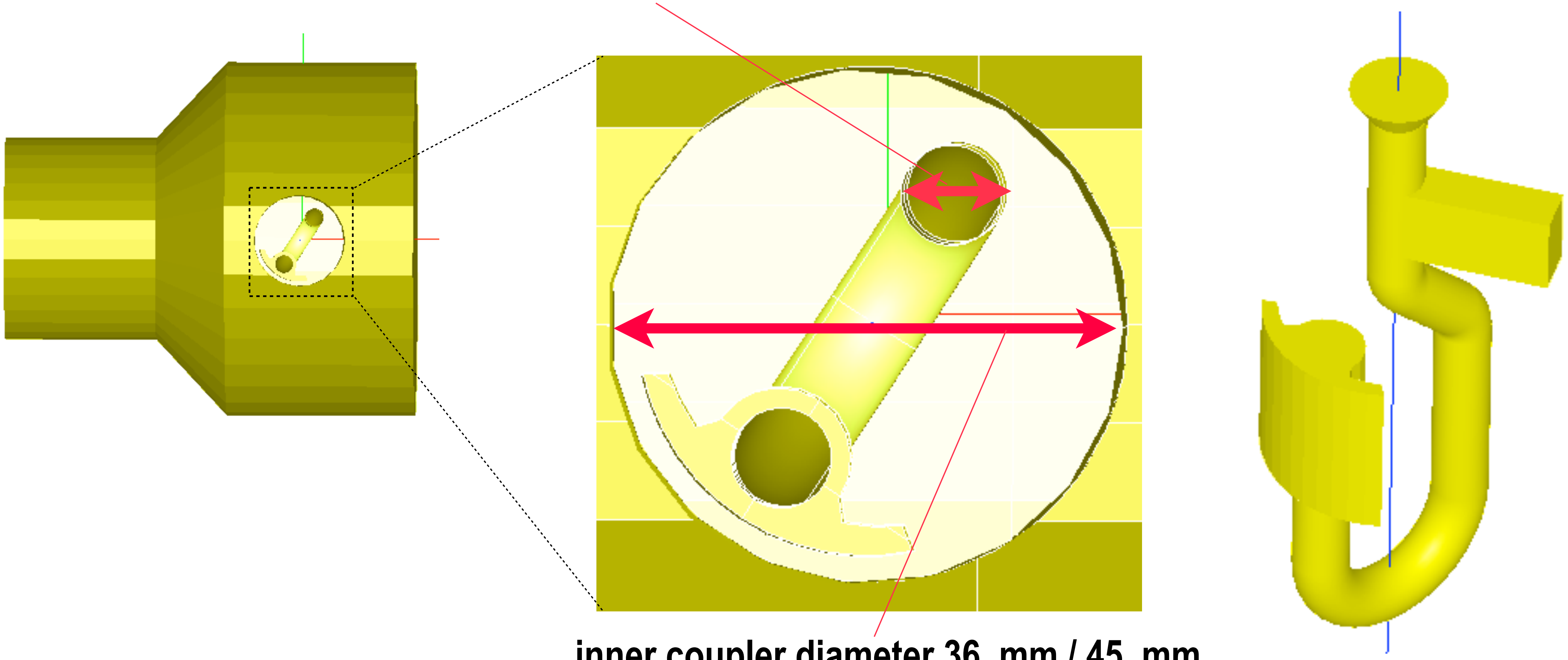

inner coupler diameter 36 mm / 45 mm

Comparison of design alternatives TE$_{11}$-coax

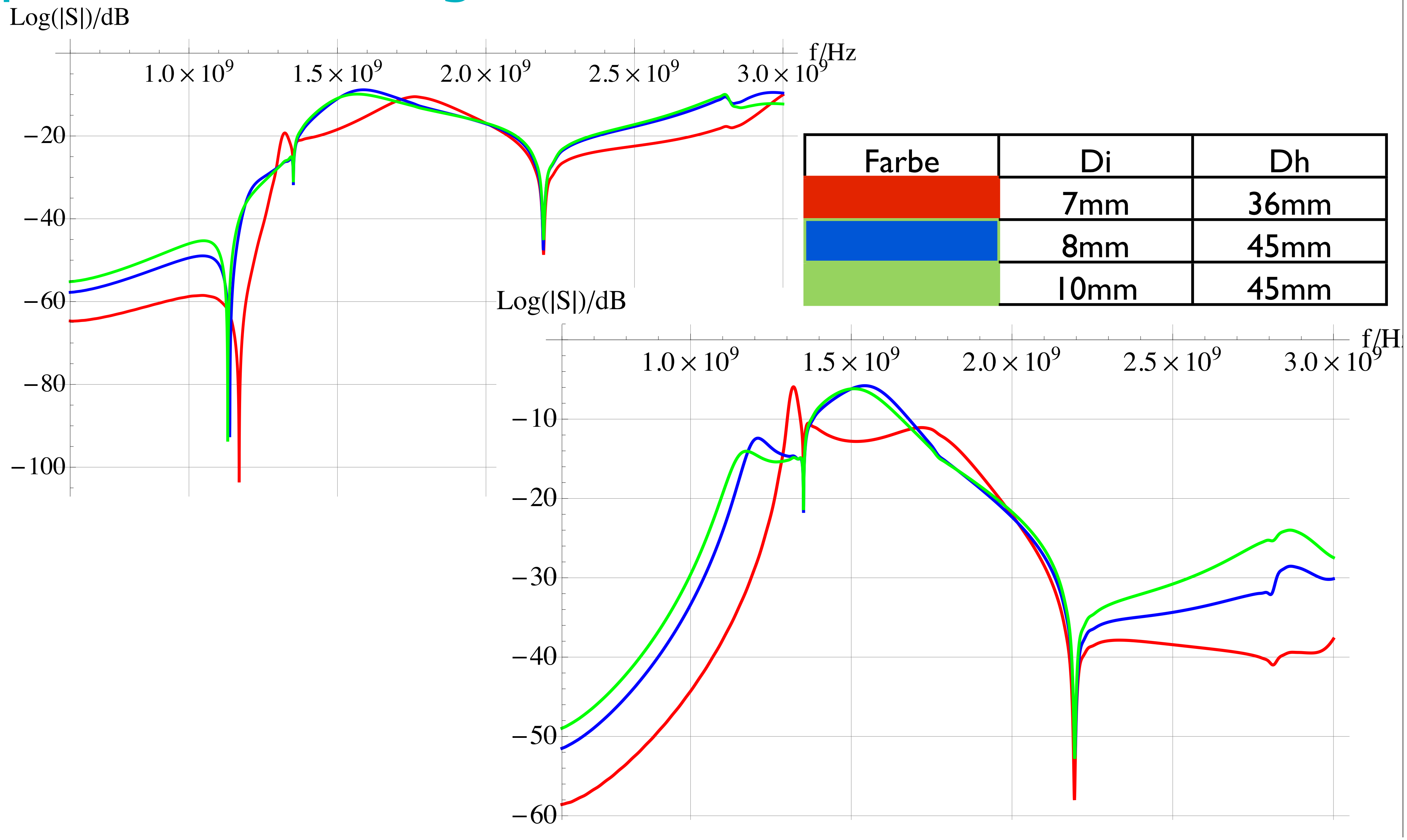

Farbe	Di	Dh
🟥	7mm	36mm
🟦	8mm	45mm
🟩	10mm	45mm

- 36 mm => 45 mm significantly improves coupling in the low frequency range
- 8 mm => 10 mm inner diameter has little effect

Comparison of design alternatives TM$_{01}$-coax

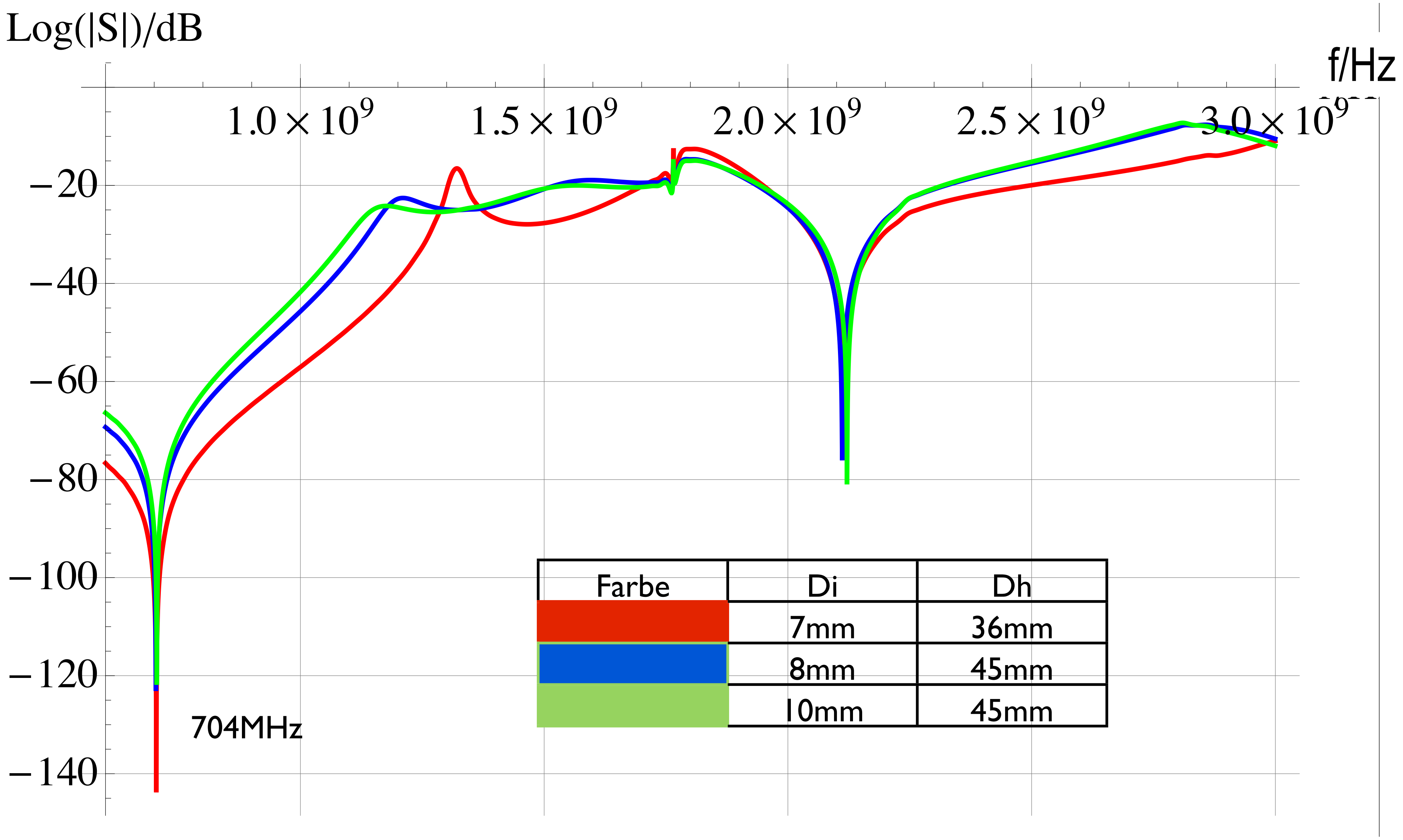

Farbe	Di	Dh
🟥	7mm	36mm
🟦	8mm	45mm
🟩	10mm	45mm

- 36 mm => 45 mm significantly improves coupling in the low frequency range
- 8 mm => 10 mm inner diameter has little effect

Q_{ext}:two 45/8-HOM-couplers, power coupler shortened

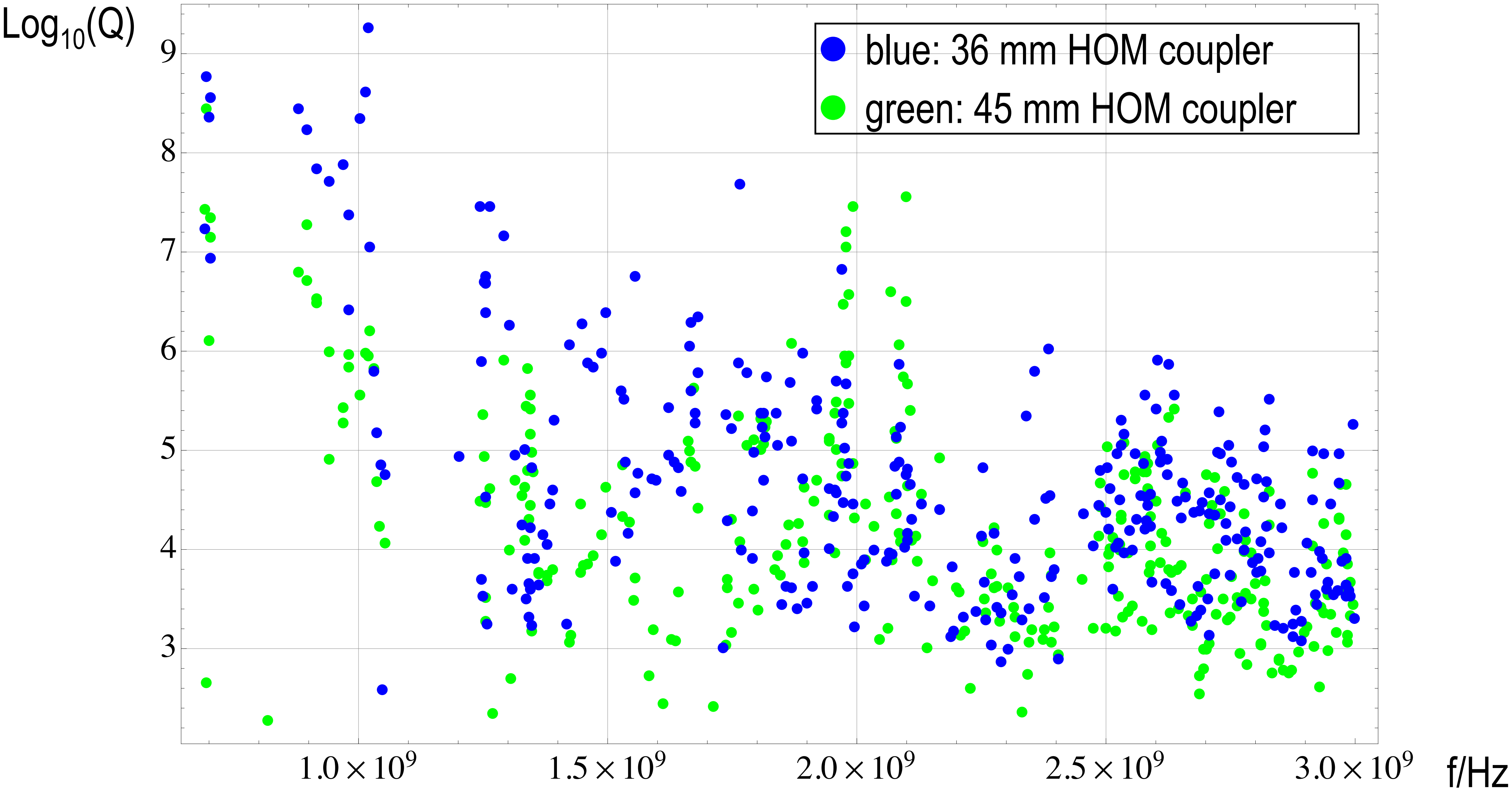

- significant improvement 36 mm => 45 mm, around 1 GHz Q ~ one order of magn.

Q_{ext}:two 45/8-HOM-couplers, power coupler shortened

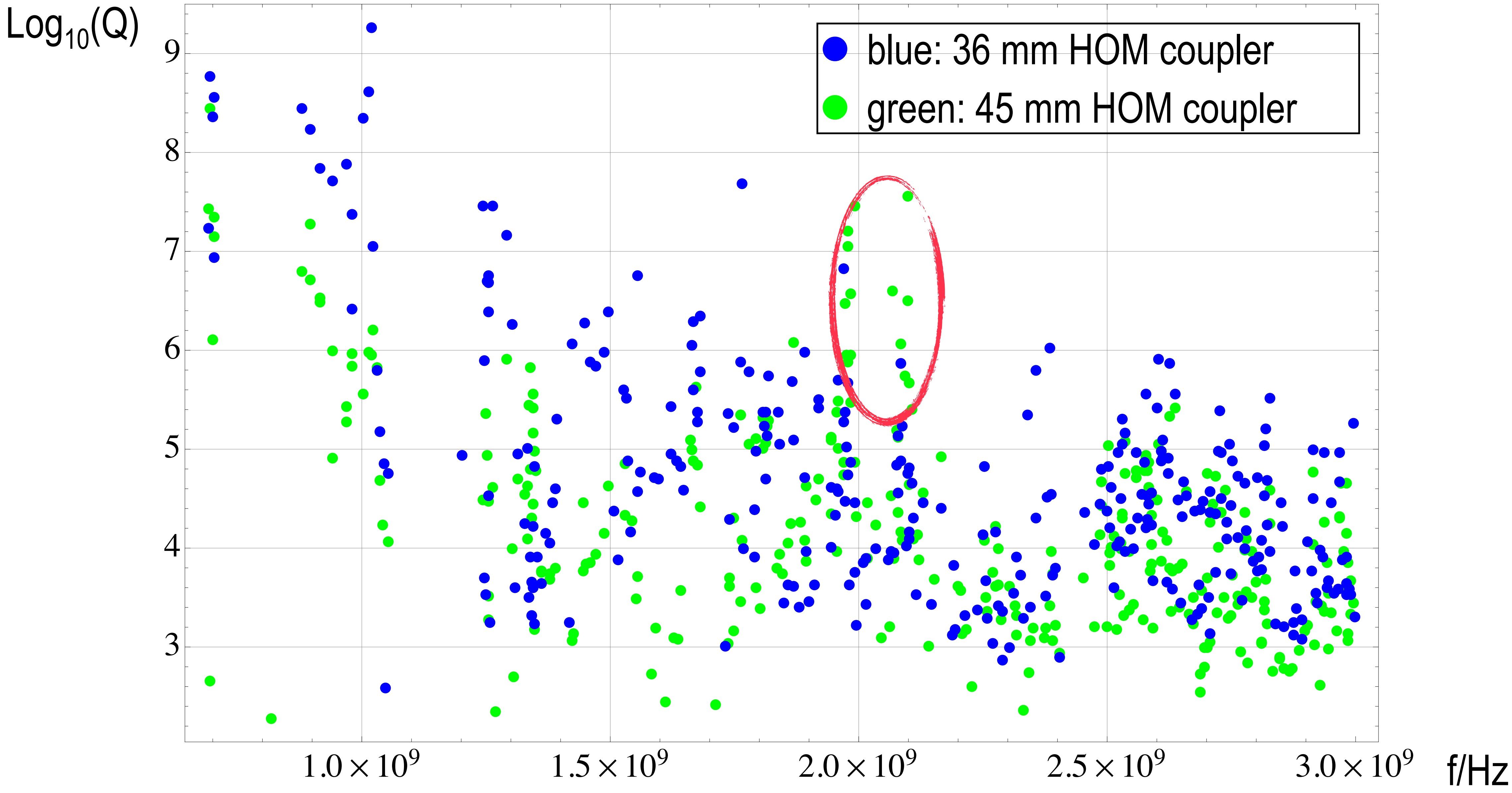

- but a few exceptions (not to be explained by failure of pole-fitting)

Most important transmissions HOM-only-(45/8)

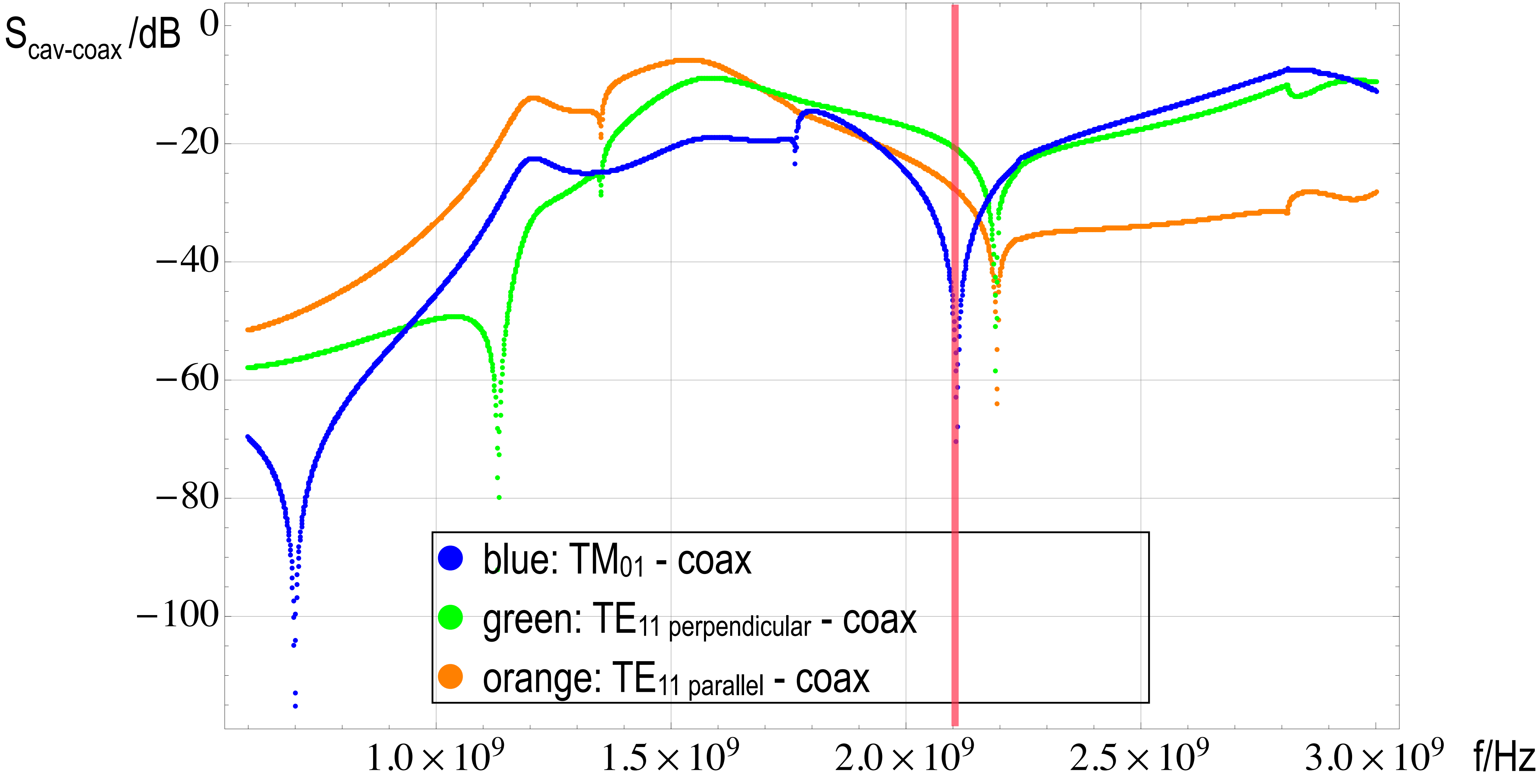

- **BAD LUCK**: 2nd TM01 notch @ 2.112 GHz **= 3.00 x 704 MHz**
- does NOT apply to HOM-Input-coupler

Additional resonances in the coupler section TM$_{01}$

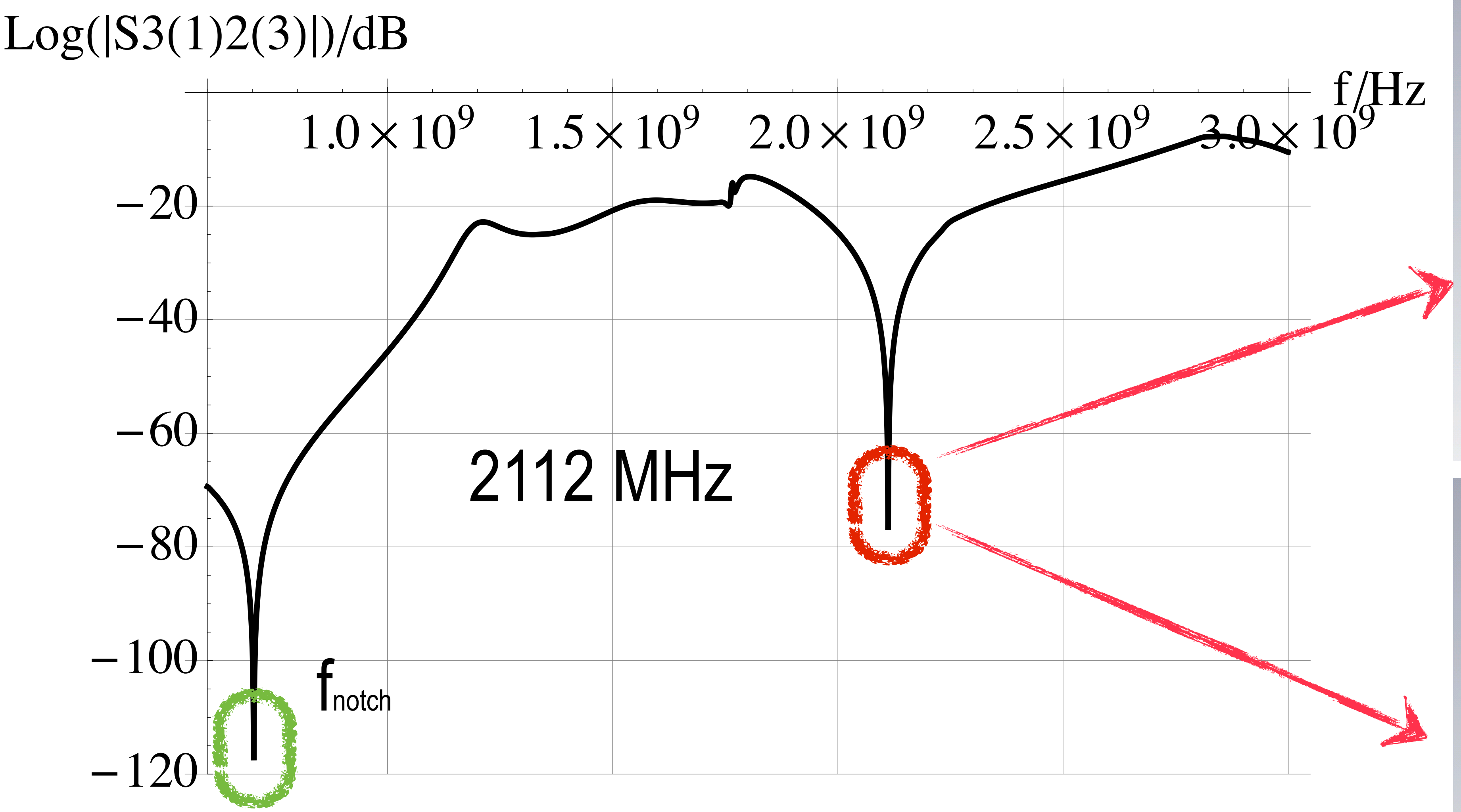

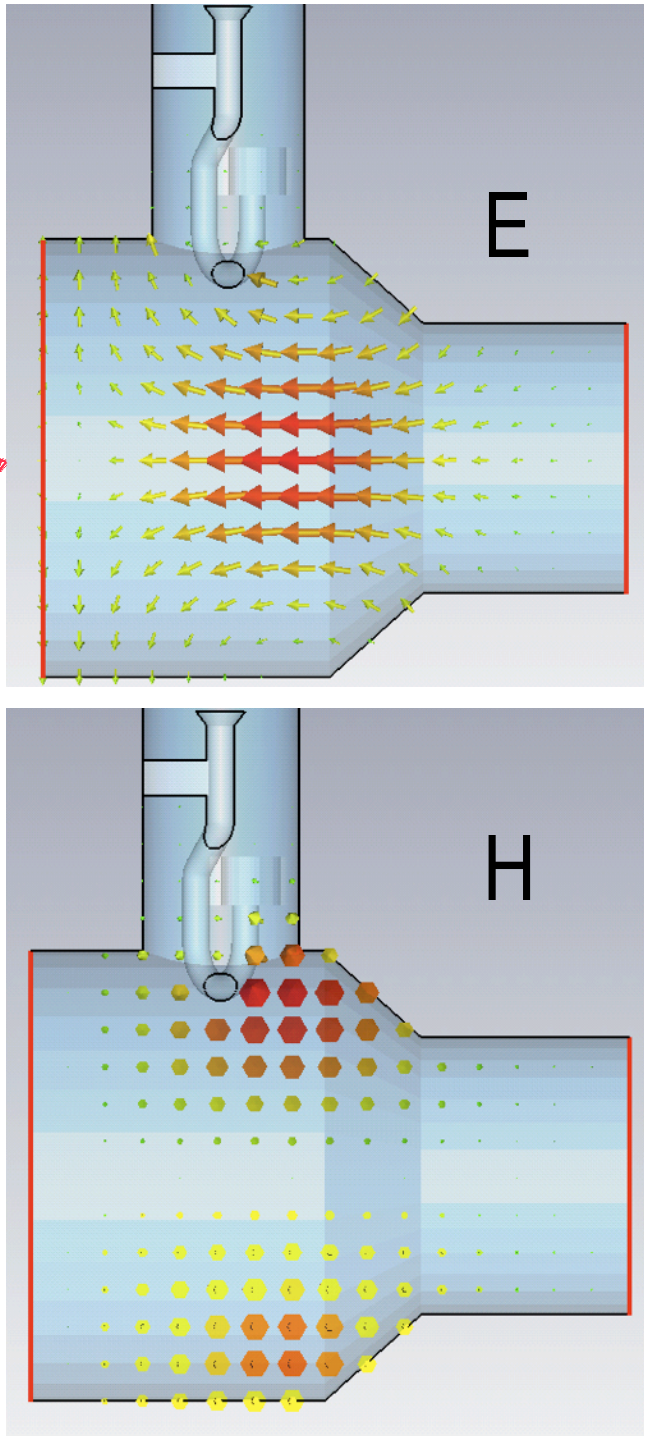

Parasitical notch frequency determined by distance between taper and HOM coupler.

Additional resonances in the coupler section TE$_{11}$

(not at a dangerous frequency)

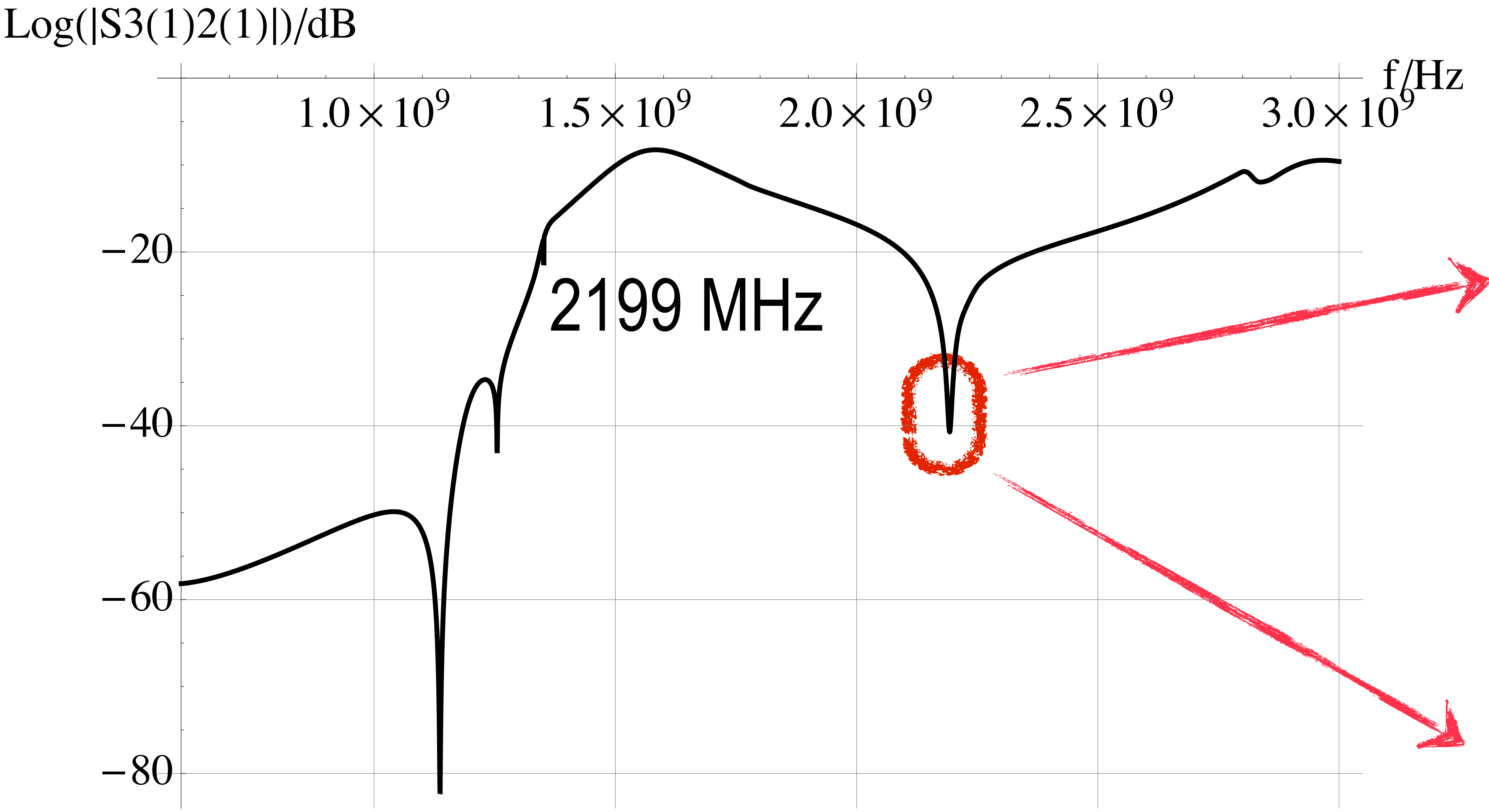

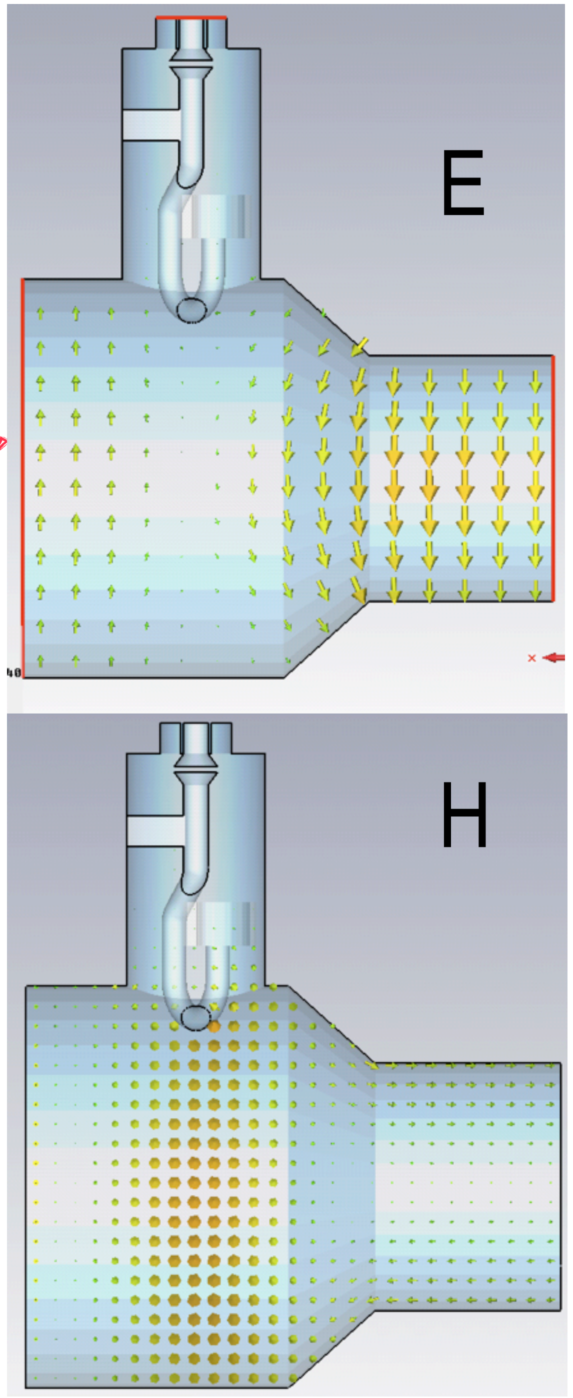

Parasitical notch frequency determined by distance between taper and HOM coupler.

Sensitivity of notch-filter frequency

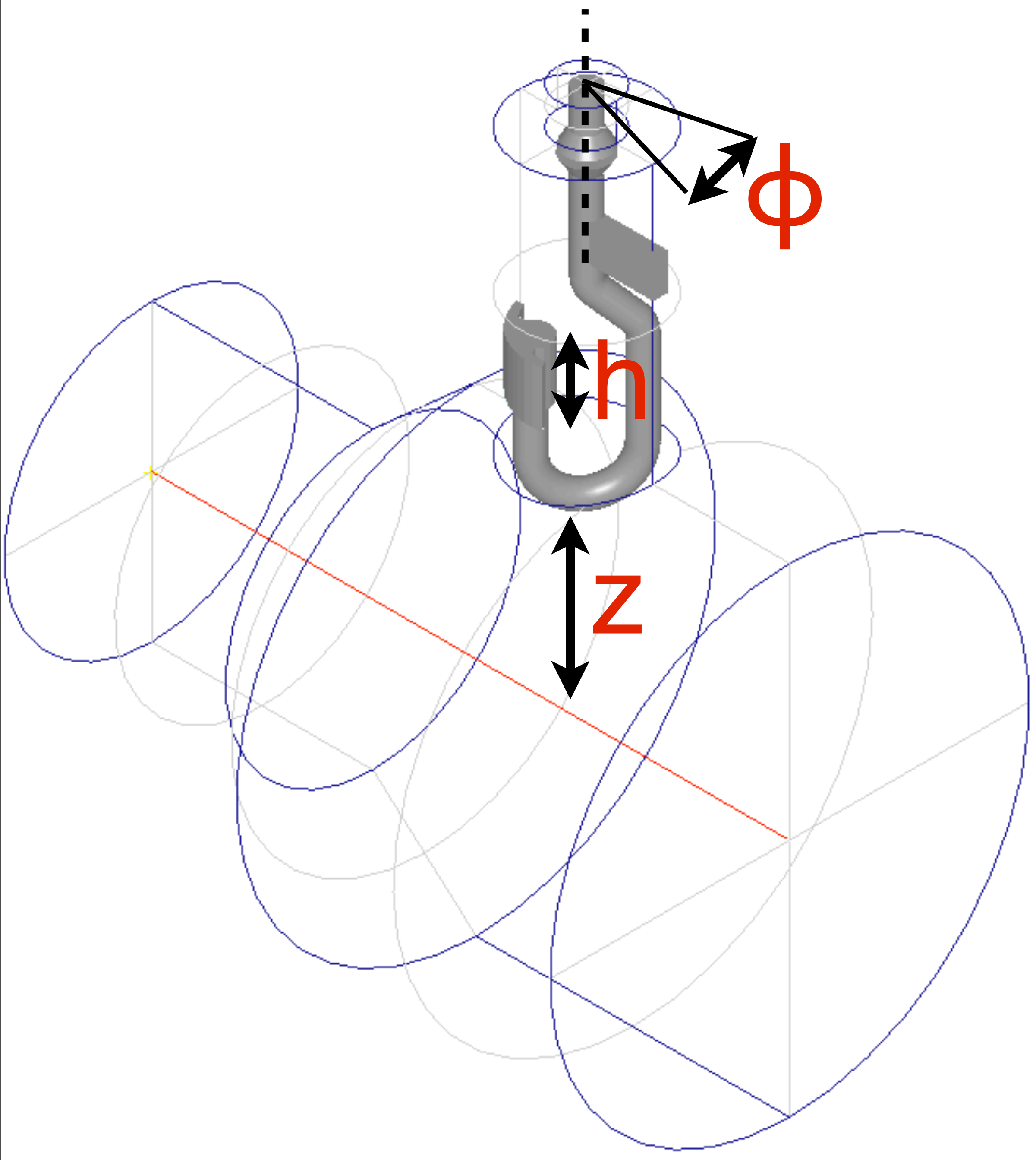

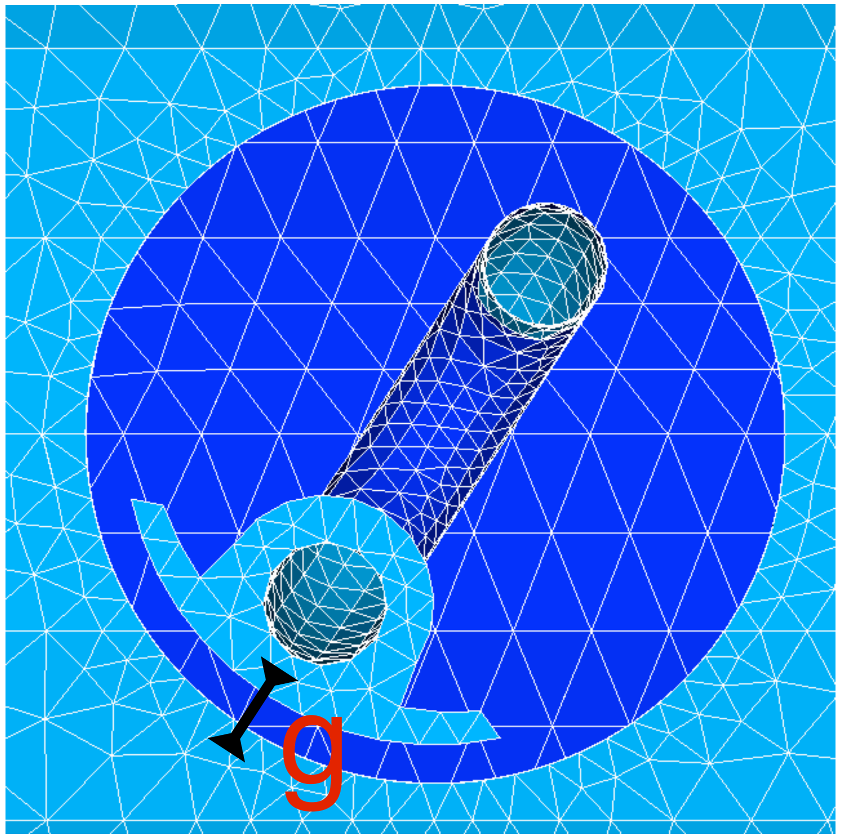

$\partial f_n / \partial z$	9.6 MHz/mm
$\partial f_n / \partial h$	-1.75 MHz/mm
$\partial f_n / \partial g$	101.2 MHz/mm *
$\partial f_n / \partial \phi$	2.8 MHz/°

$^{*} f_n \propto \sqrt{g}$

Use angular sensitivity to avoid 2.112 GHz notch?

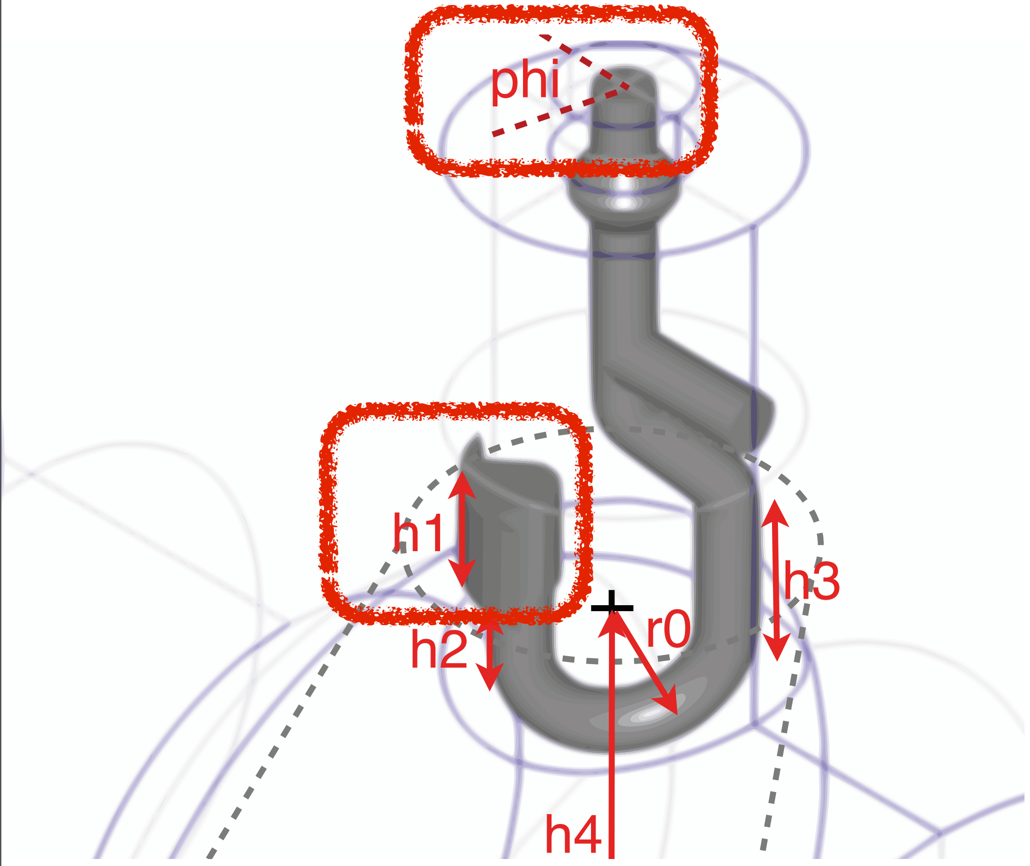

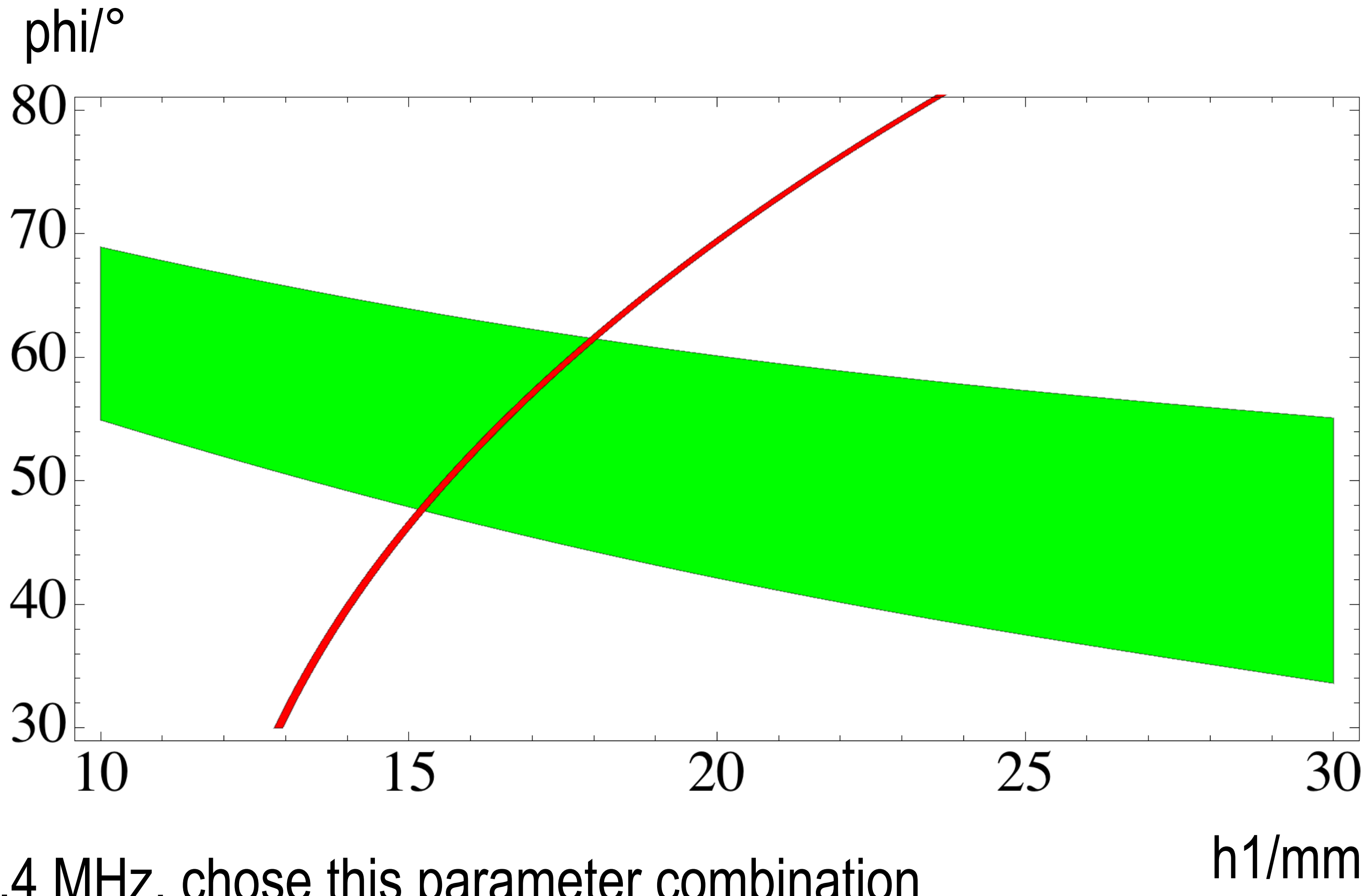

red: TM01-notch fixed @ 704.4 MHz, chose this parameter combination

green: BAD LUCK-notch @ 2112+-20 MHz; avoid this combination

or put the port closer to the cavity (which also increases (all) couplings)

Surface current density at V_{acc} = 1MV, f = 704.4 MHz

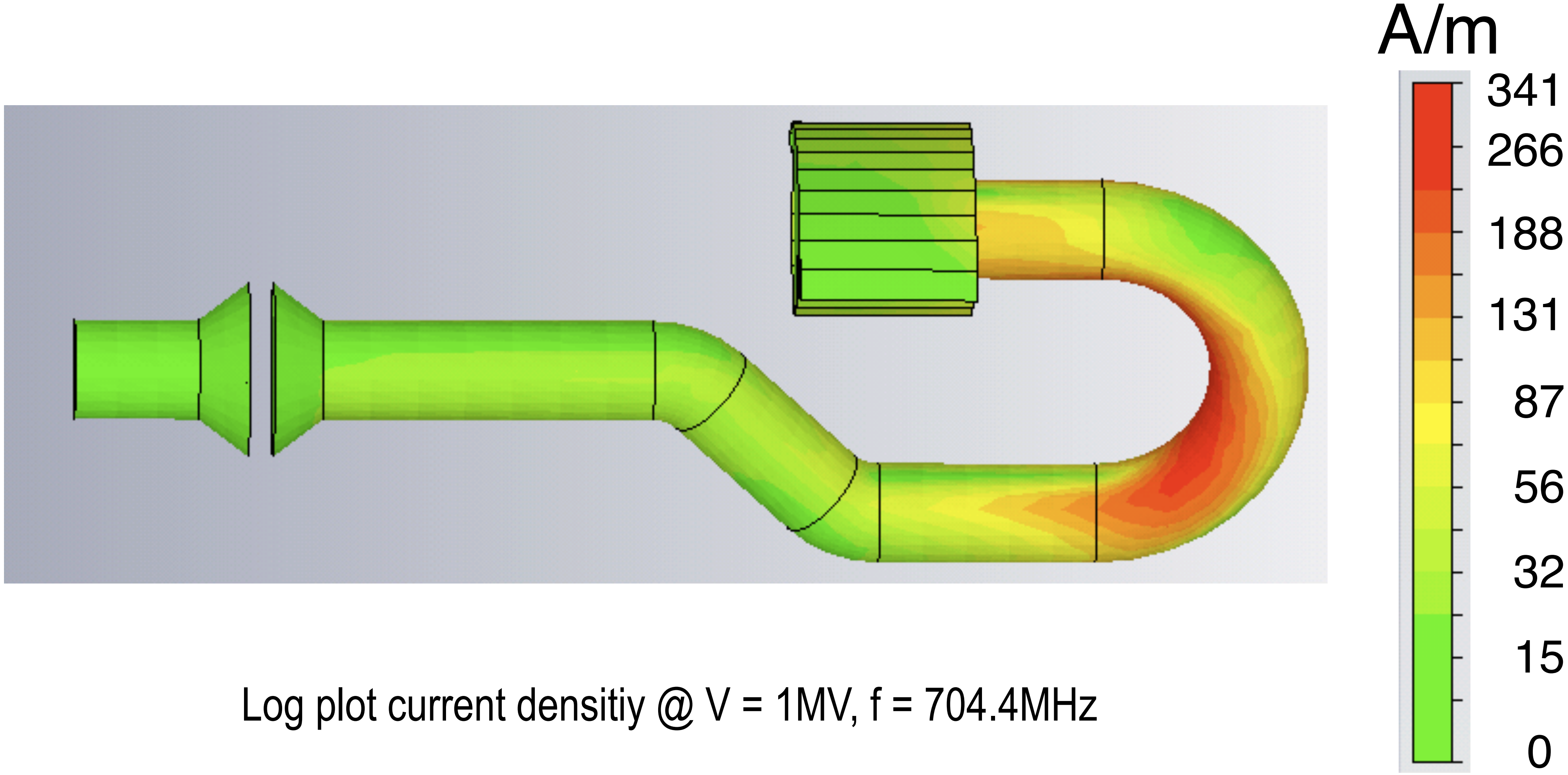

Log plot current densitiy @ V = 1MV, f = 704.4MHz

*insider communication: current densities ~50% of (36/7)-design => power ~25%

Mechanical modes

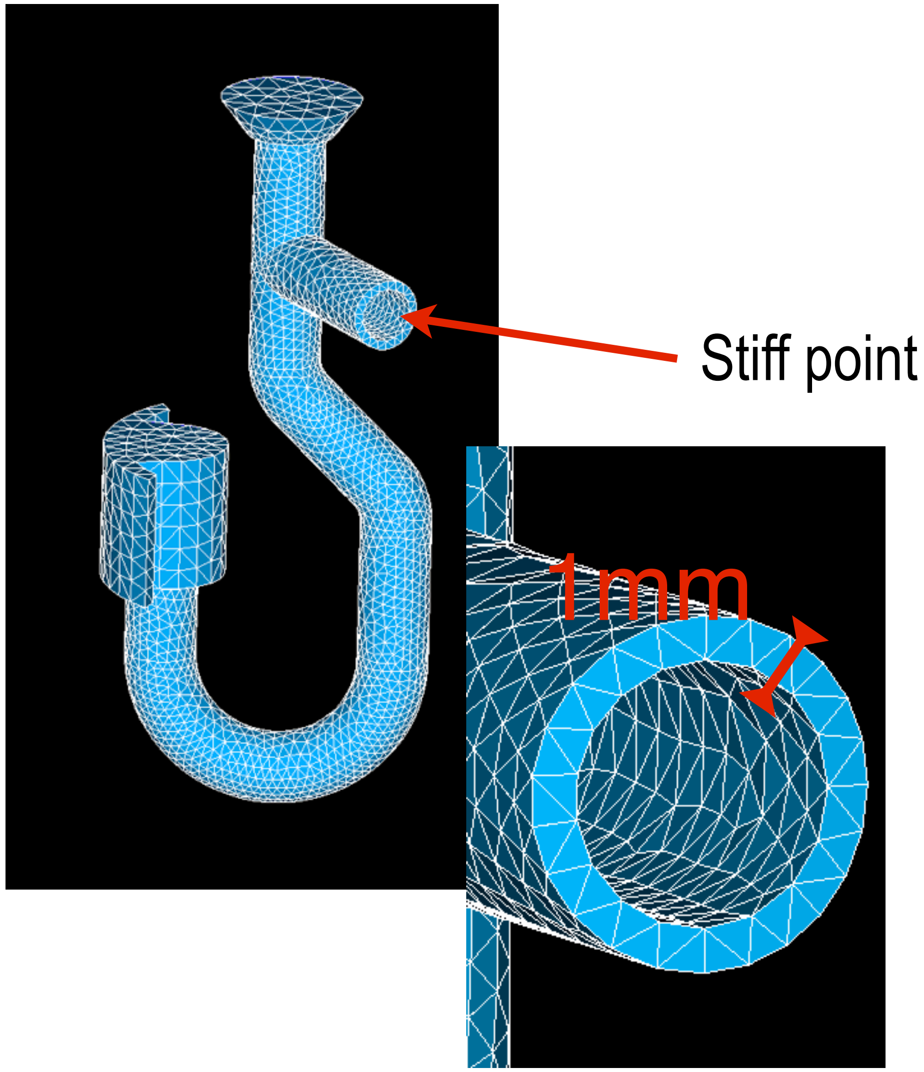

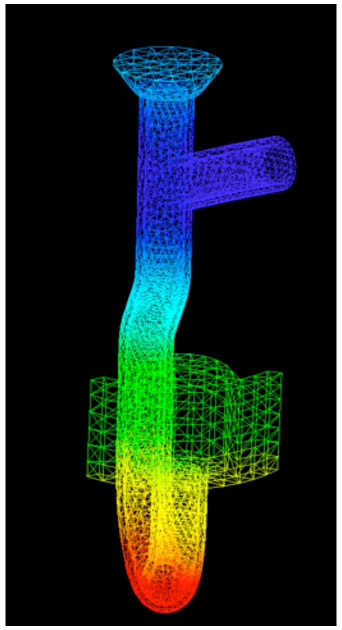
93 Hz

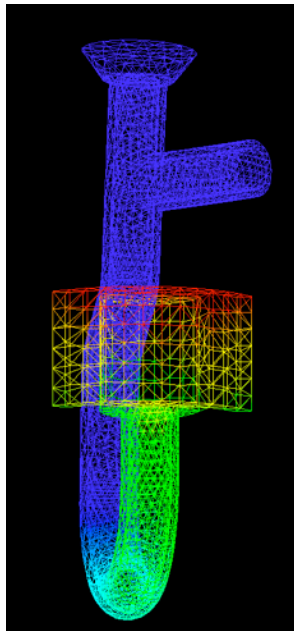
106 Hz

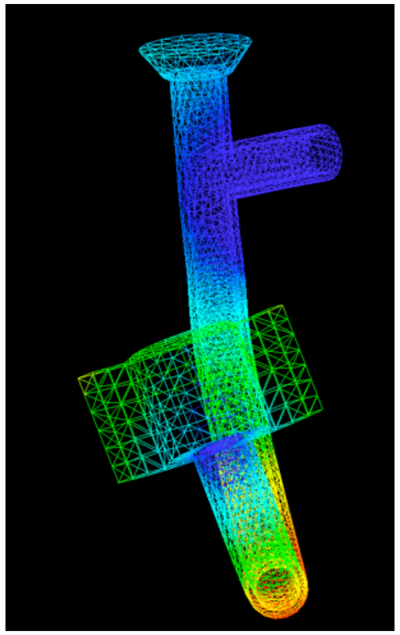
150 Hz

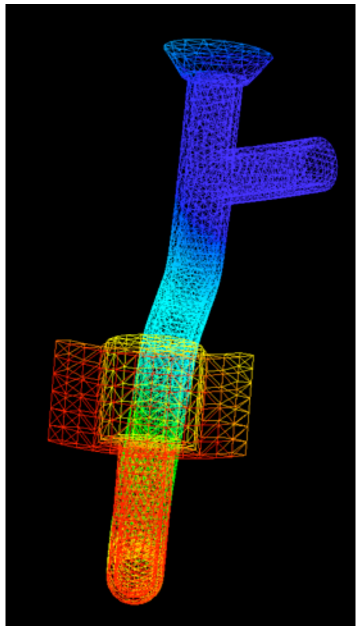
194 Hz

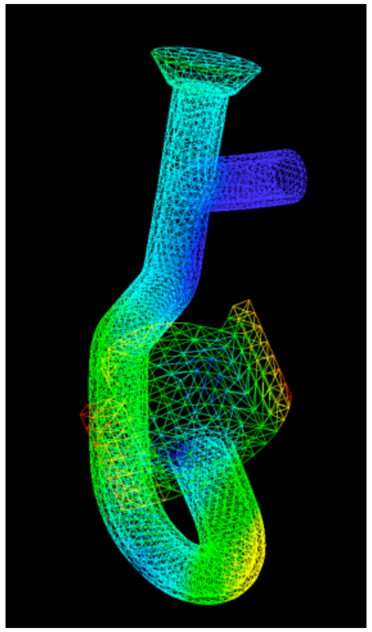
439 Hz

- simulated with Code Aster
- reach low frequency range, excitation spectrum?

Hook-style coupler summary

- Design based on LEP-, LHC-, Saclay- ideas ...
- ... and "mountability" was one primary concern (=> no fixed connection downside to flange)
- Step by step coupling was improved to $Q<10^6$, (10^5 ?) everywhere (except ~900MHz) ...
- ... exploiting the 45 mm port diameter.
- fundamental mode notch based on combined directional coupler-/filter effect and attaches TM0 only => sensitive to orientation (problem or property? <=> rotational tuning possible, but needed)
- cooling concept under discussion @CERN (hope for conduction, do not exclude active cooling)
- BAD LUCK-3*704.4 MHz-notch can be avoided

Improved multipacting characteristics
(following Guillaume's suggestion)

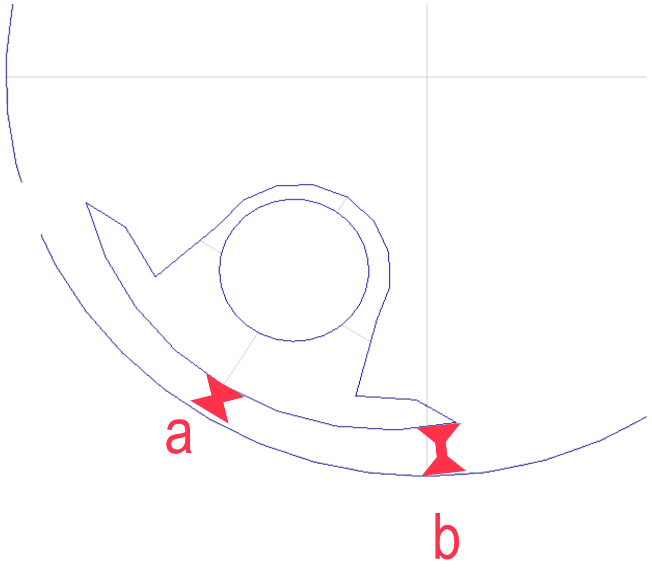

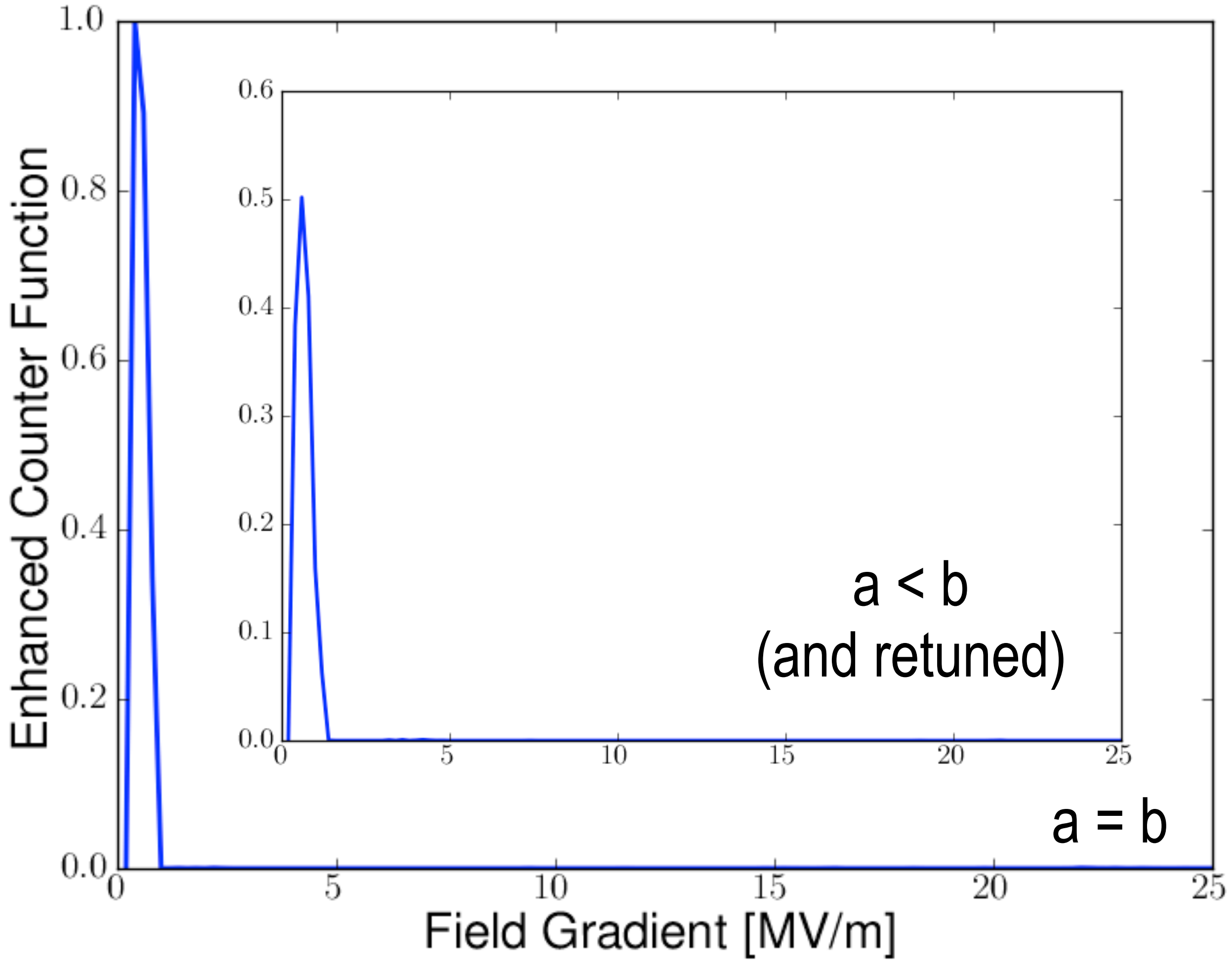

- Original UROS design has a severe (???) MP barrier around 1MV/m
- Slightly modified capactive element (after retuning) reduces the ECF by a factor of 2

Coupler olympics

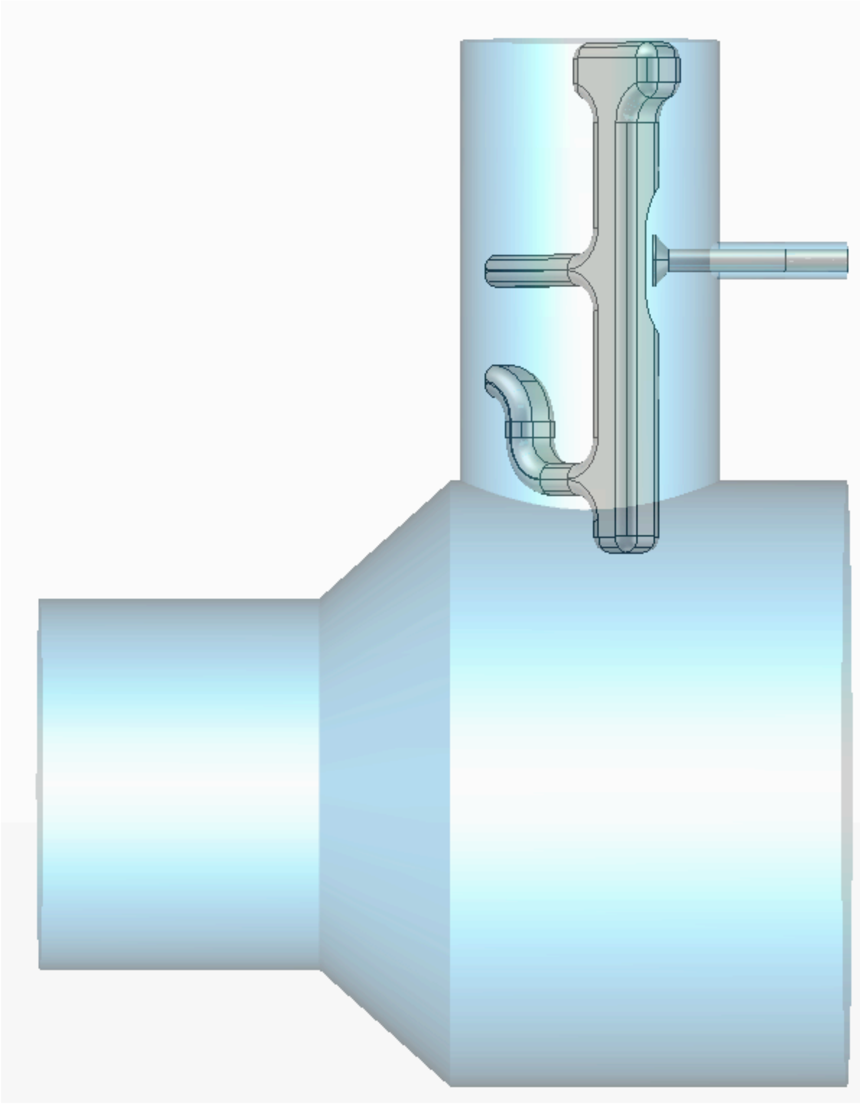

Scaled TESLA*

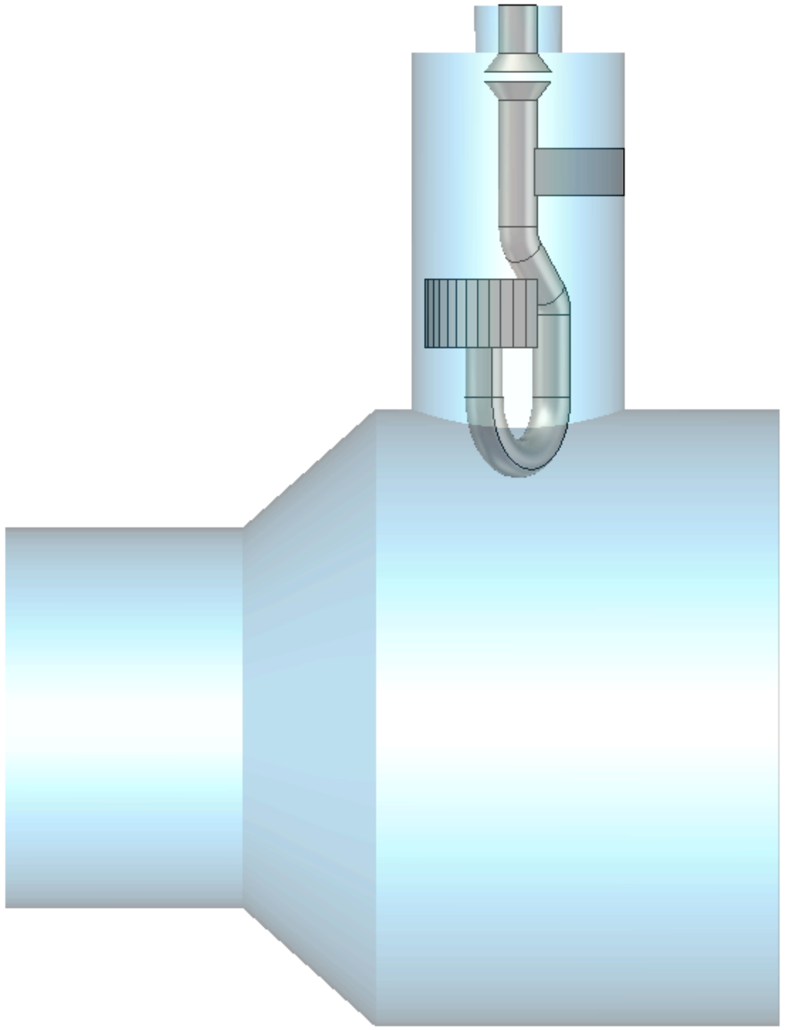

Hook style

*Coupler geometry courtesy Rama R. Calaga: http://rcalaga.web.cern.ch/rcalaga/704MHz/HOM.html

Slightly different "weight" classes

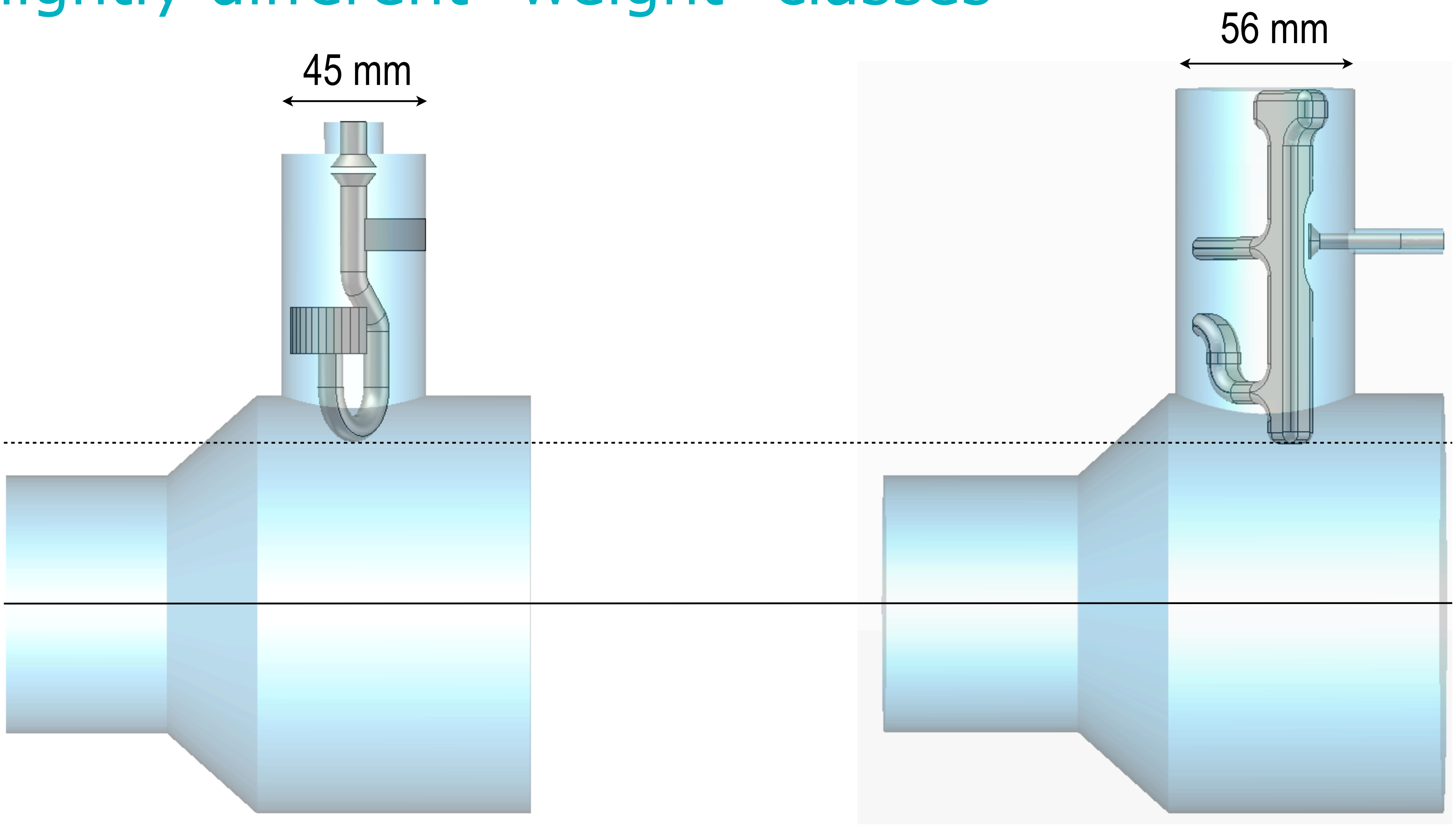

- Same distance to beam axis
- Different HOM-coupler diameter

Comparison of transmission characteristics TE$_{11}$(1)

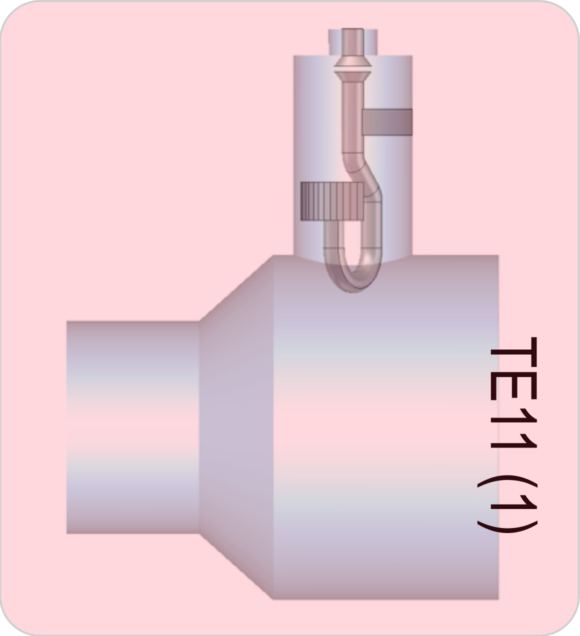

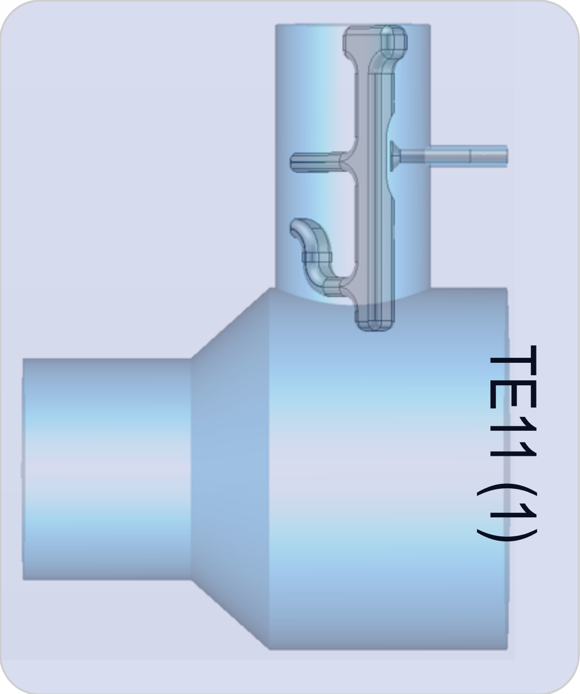

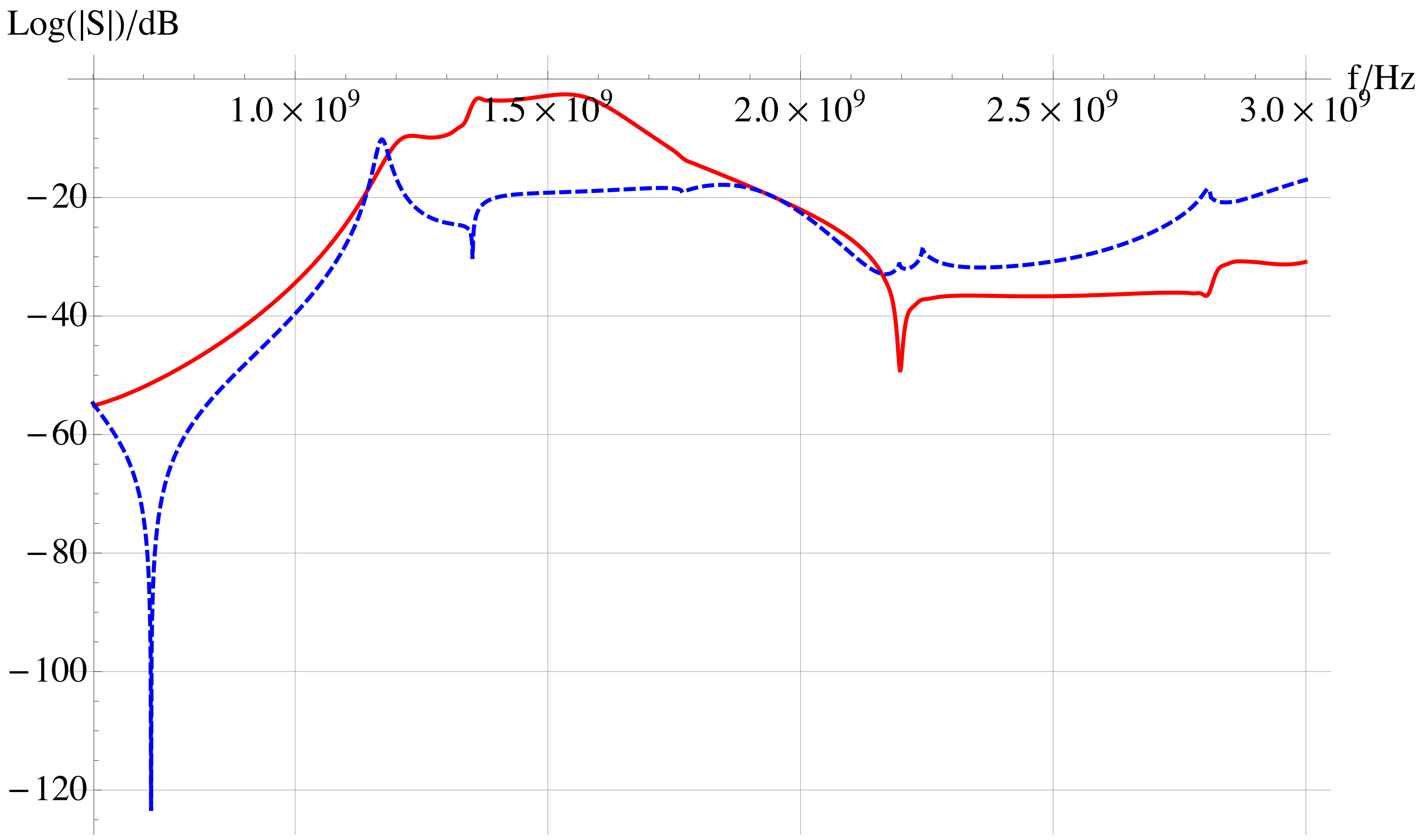

Comparison of transmission characteristics TE$_{11}$(2)

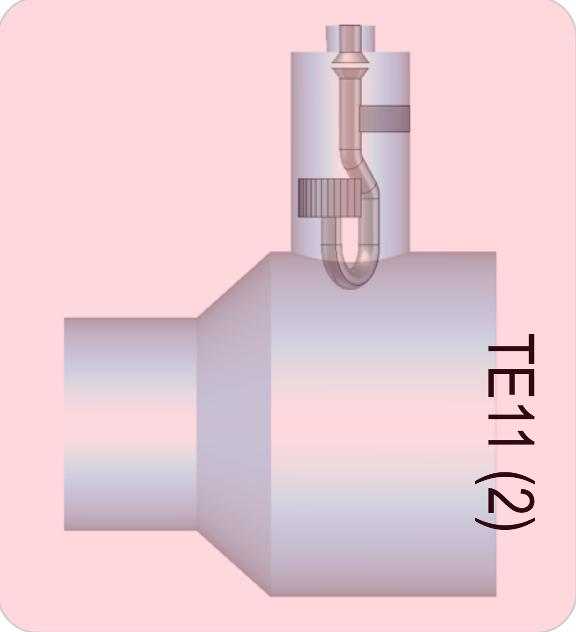

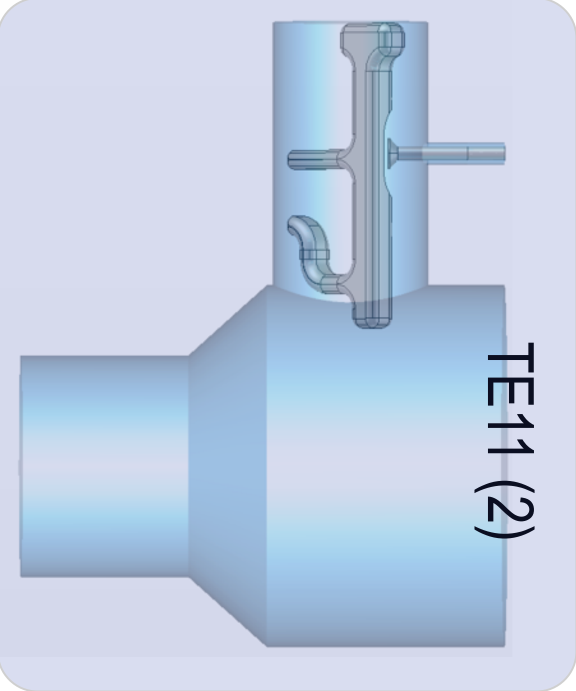

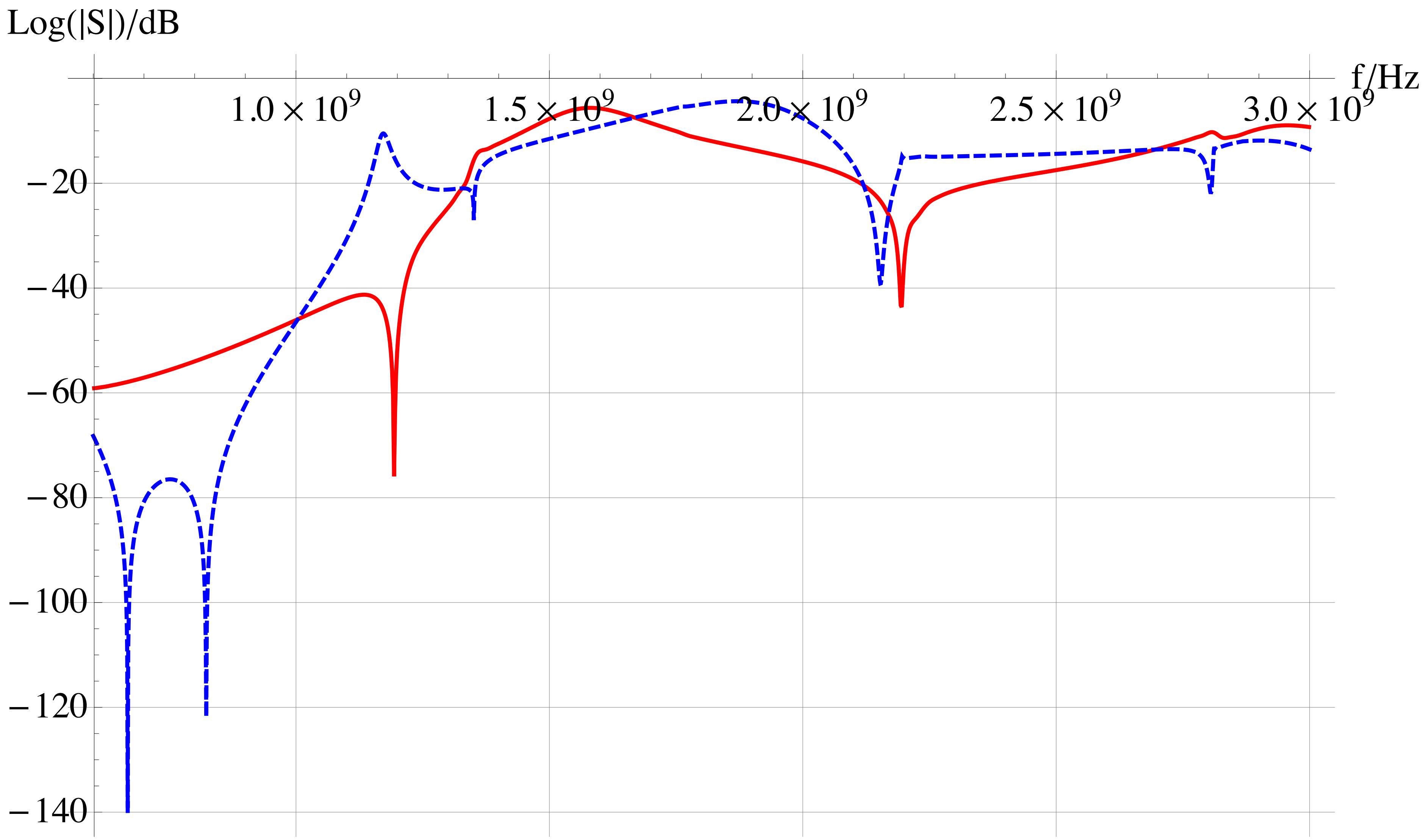

Comparison of transmission characteristics TM$_{01}$

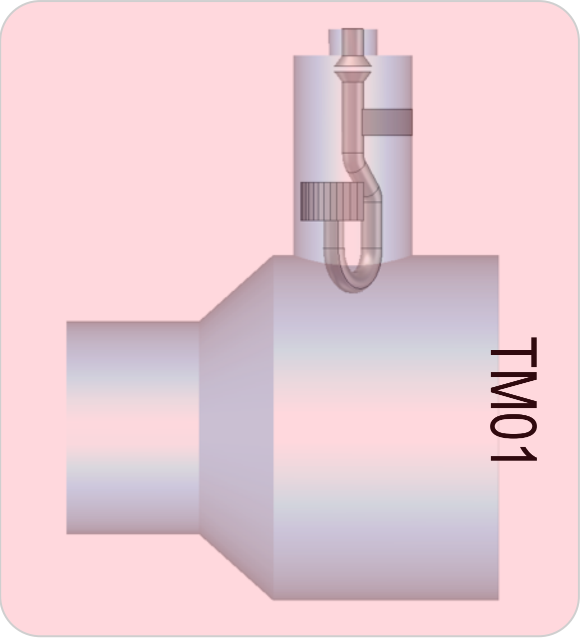

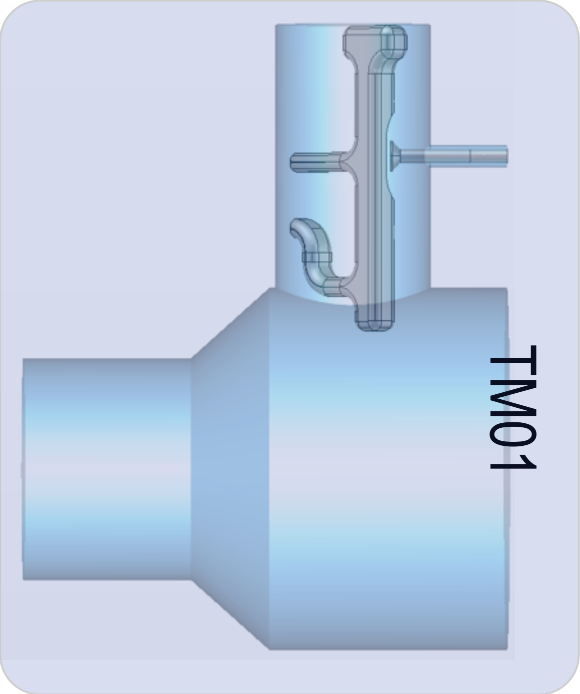

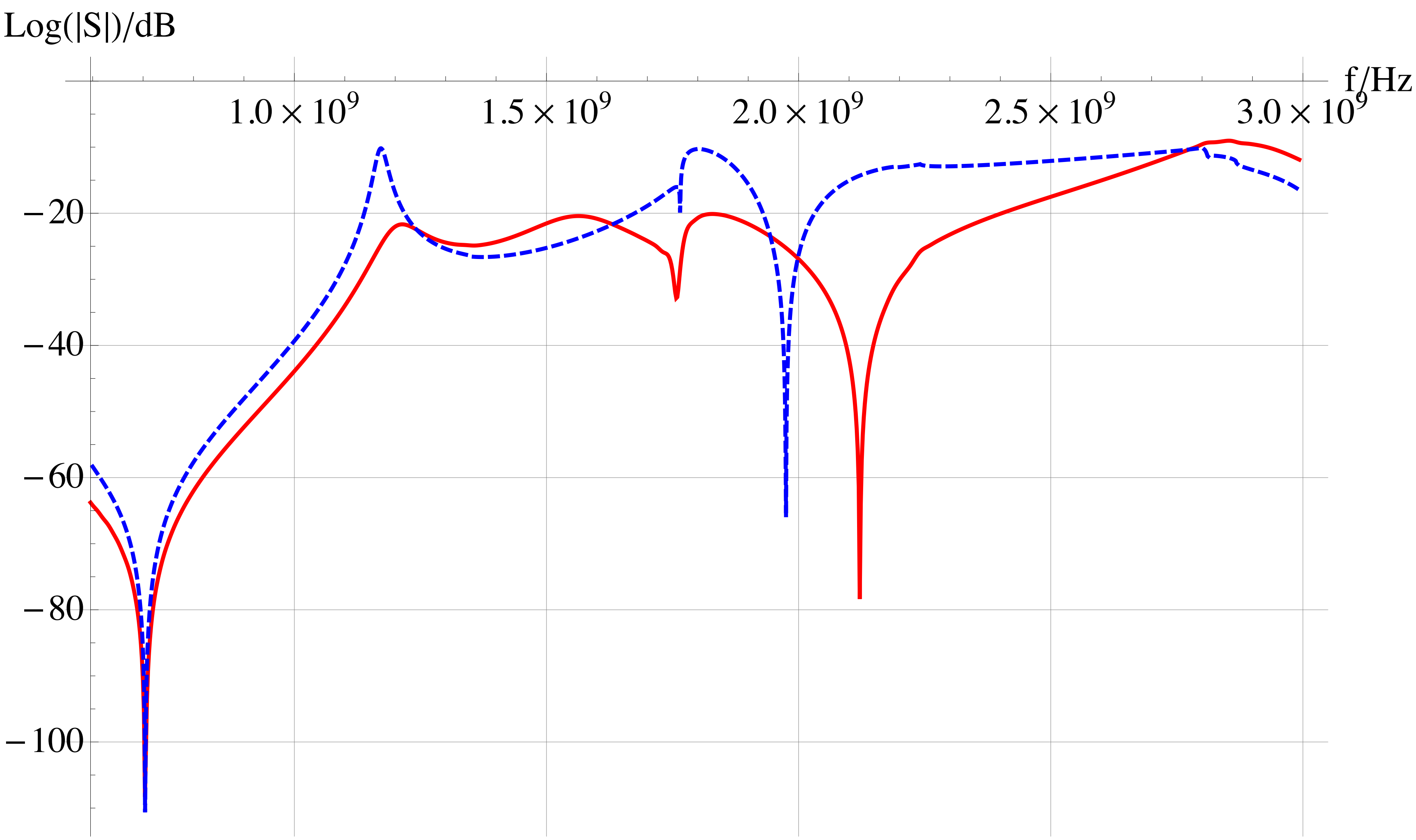

Comparison of transmission characteristics $TE_{21}(1)$

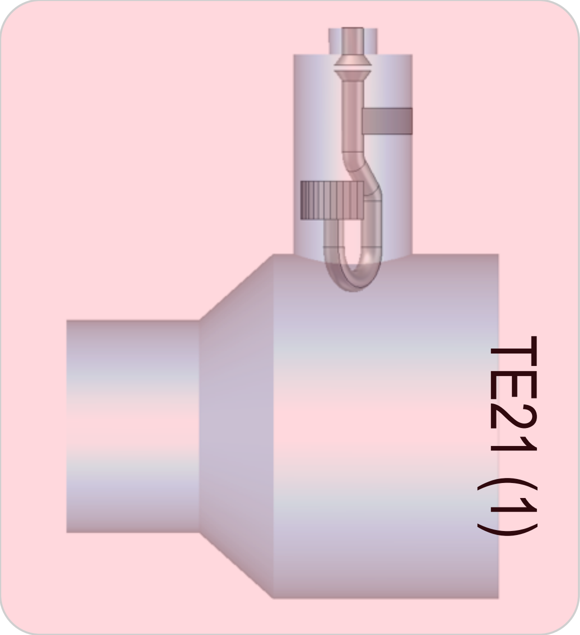

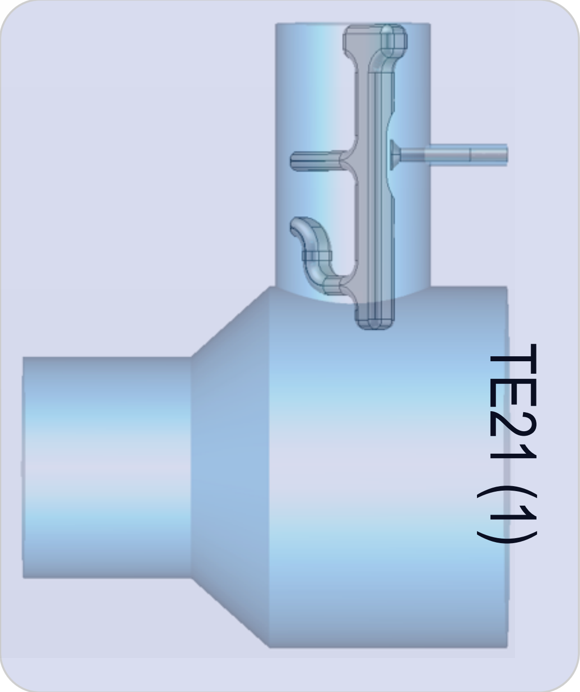

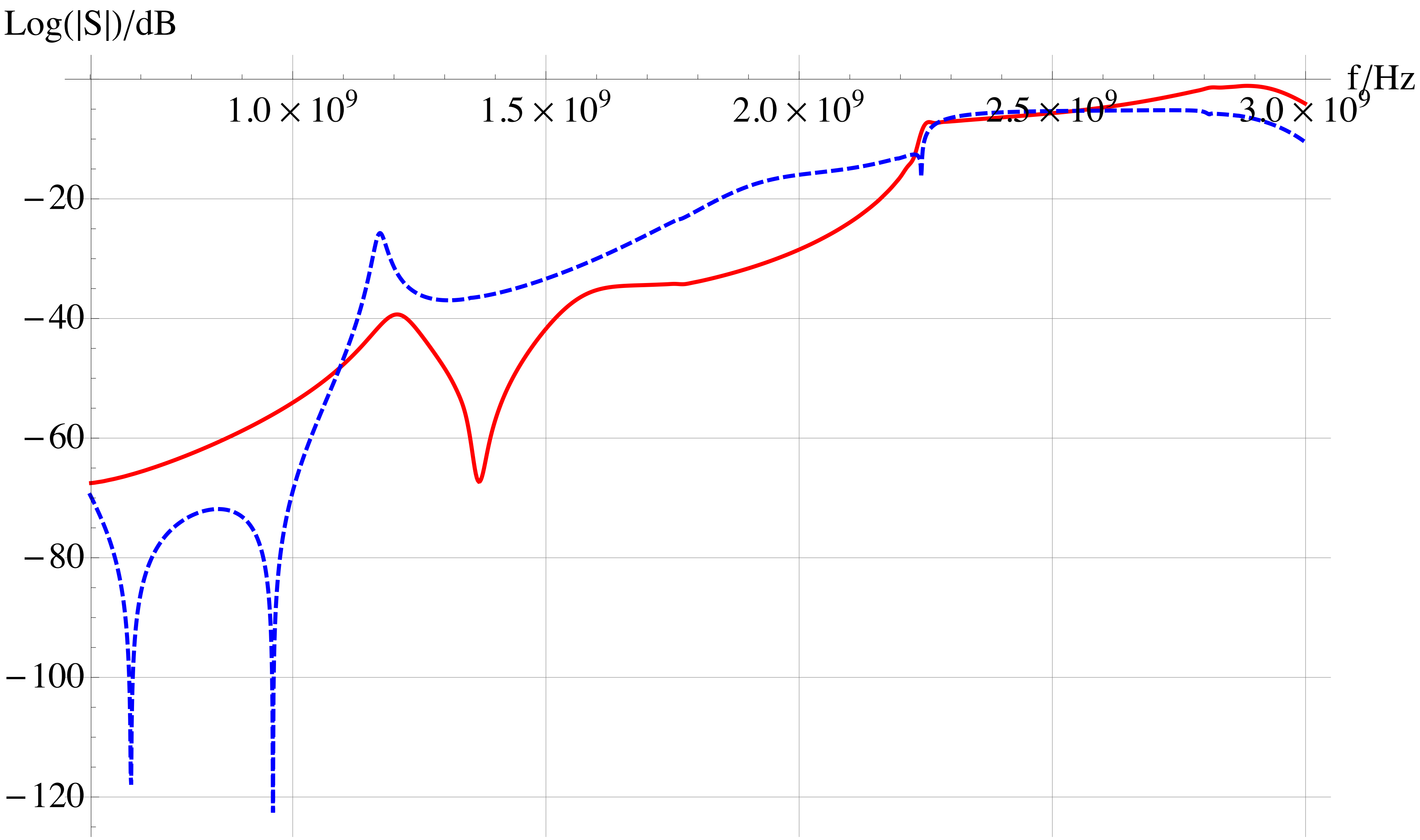

Comparison of transmission characteristics TE$_{21}$(2)

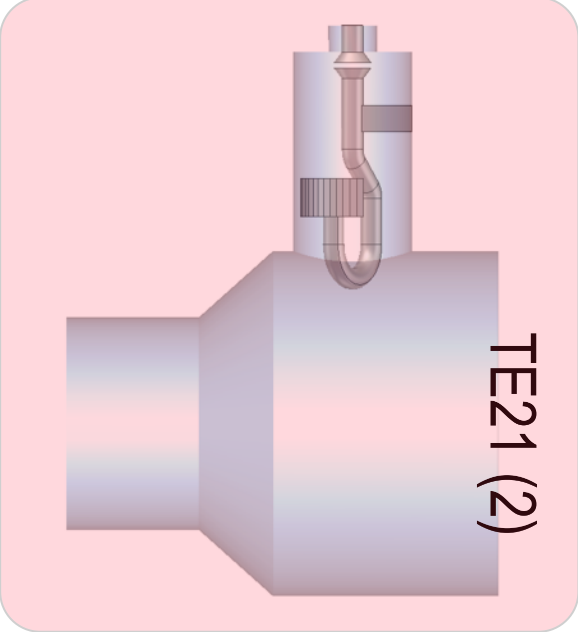

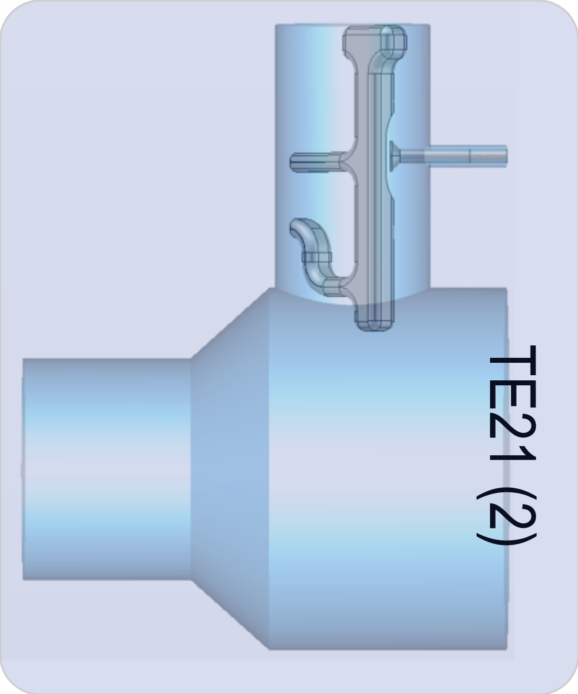

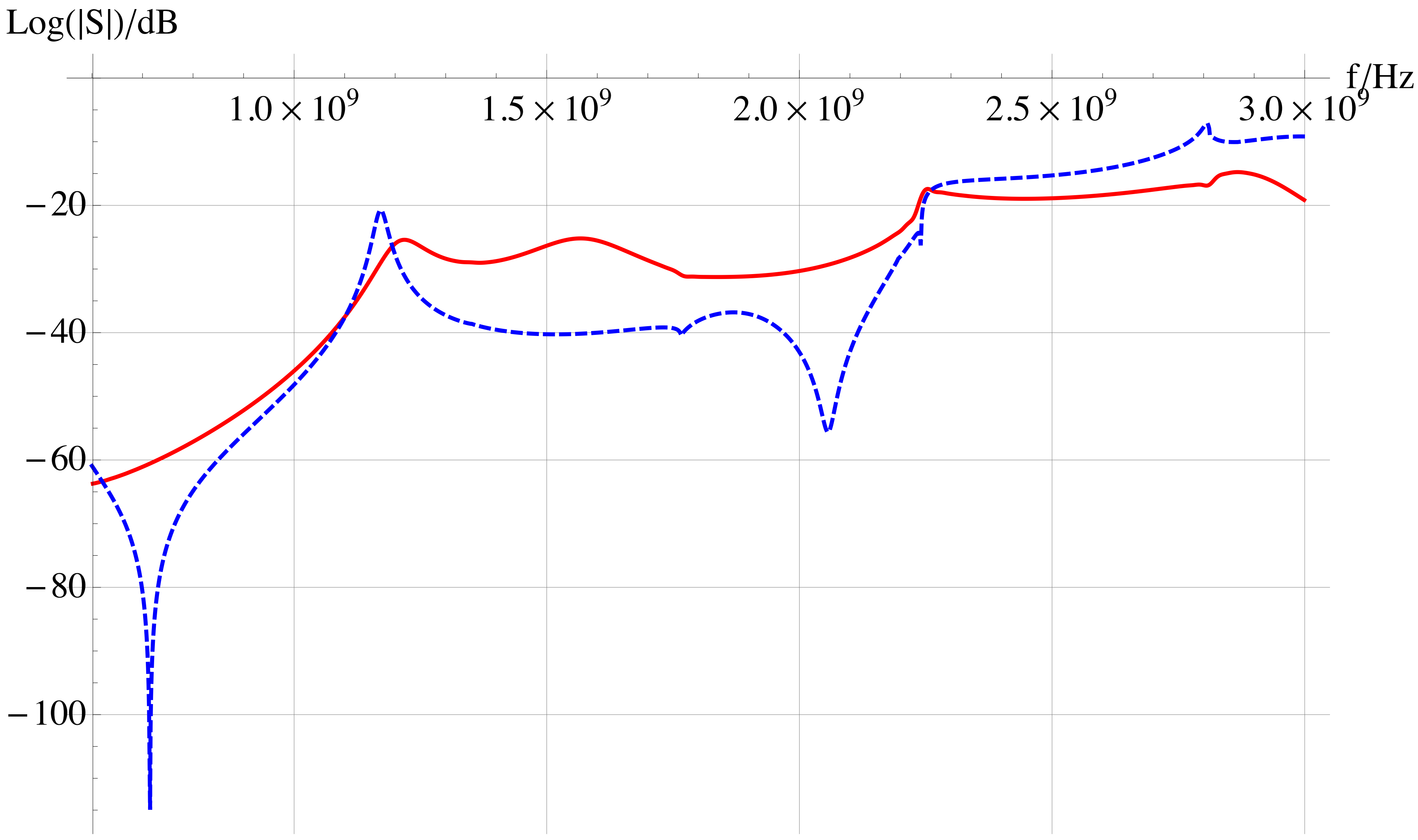

Comparison of transmission characteristics $TM_{11}(1)$

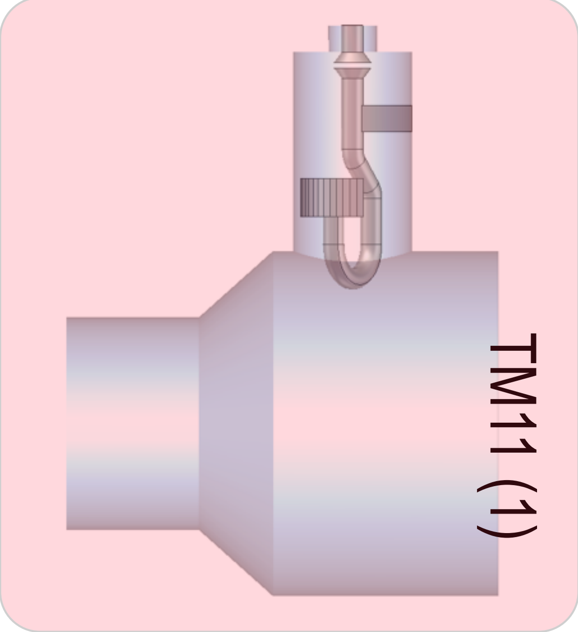

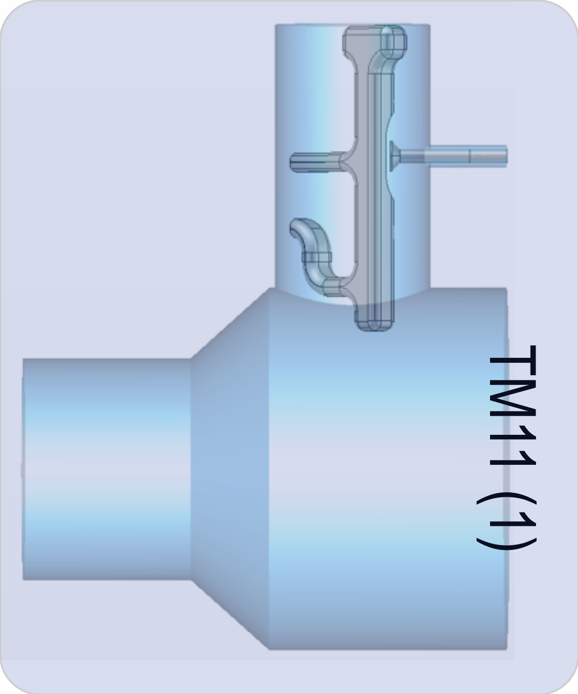

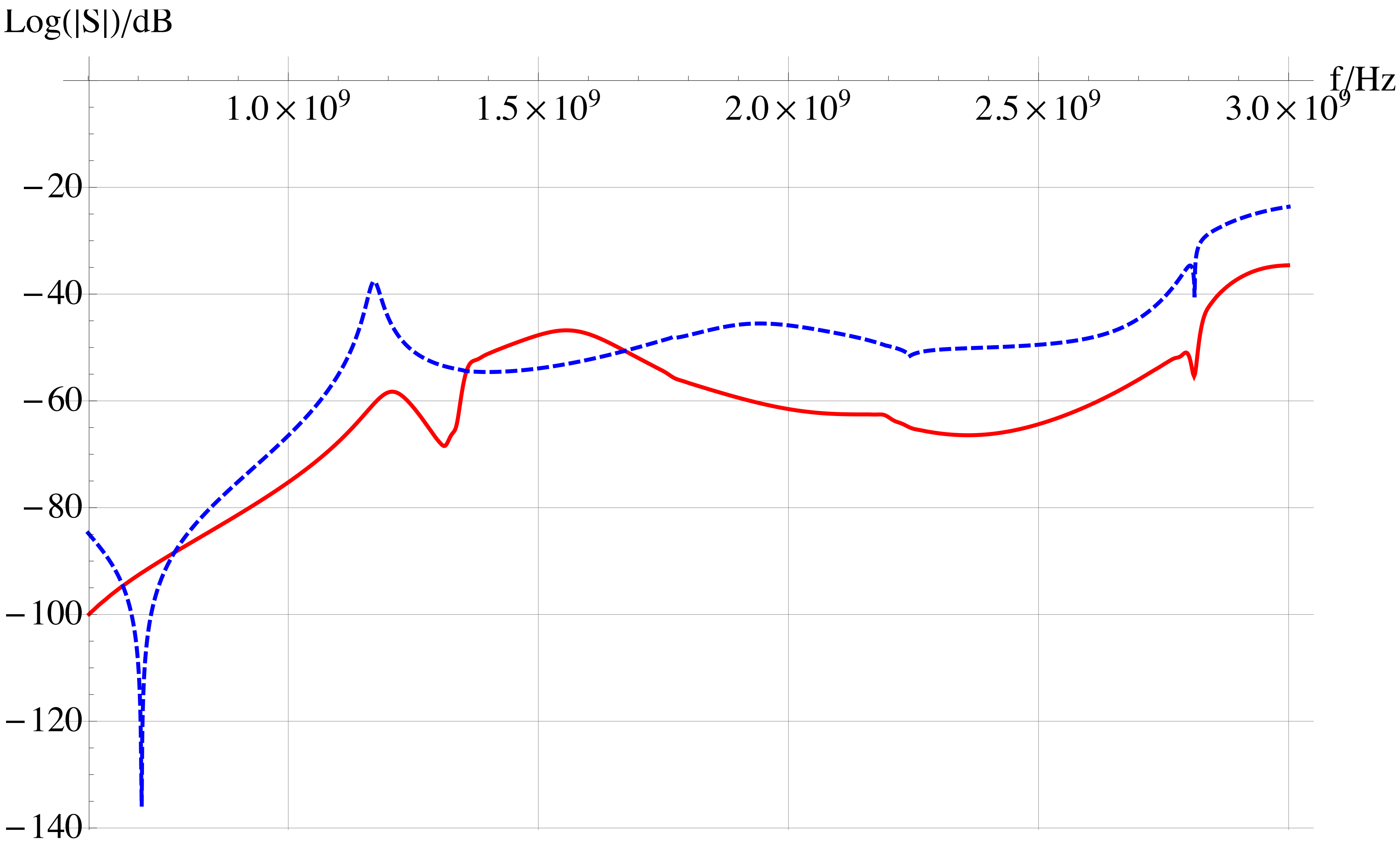

Comparison of transmission characteristics $TM_{11}(2)$

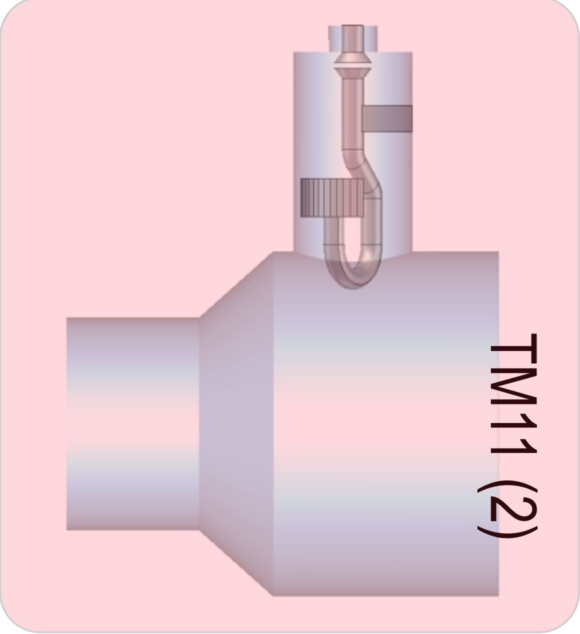

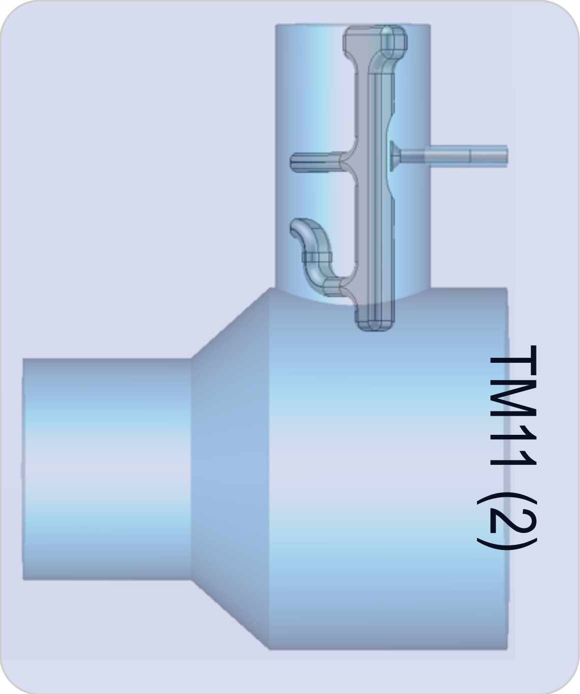

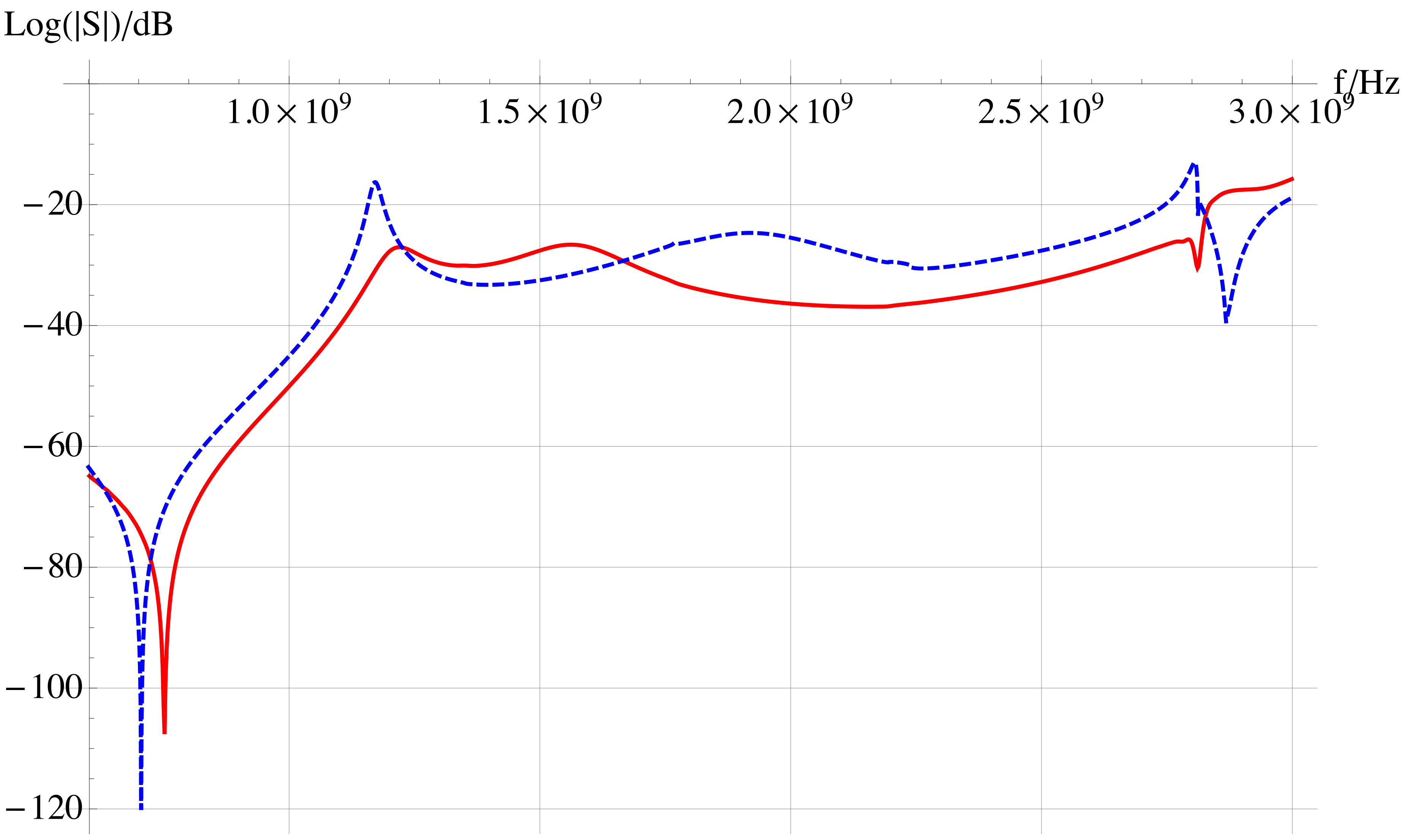

Comparison of transmission characteristics and more

- similar transmission performance, some advantage for TESLA-style, esp. @ $TM_{11}(1)$ ...
- ... but using bigger port (56 mm instead of 45 mm), gaining ~ 5 mm reduced distance for evanescent beam pipe modes
- Hook-style appropriate for de-/mounting
- TESLA-style appropriate for cooling loop (two stems)
- Notch in TESLA-style based on internal resonance => independent from beam pipe mode, high field intensities inside, re-tuning with end-plate capacity
- Notch in Hook-style based on combination of internal resonance and directional coupling, re-tuning by rotation
- TESLA-style stiffer
- MP/FE => Steve, Rob et.al.

Thank you for your attention

Spare Slides

Concatenation procedure based on scattering properties: Coupled S-Parameter Computation = CSC

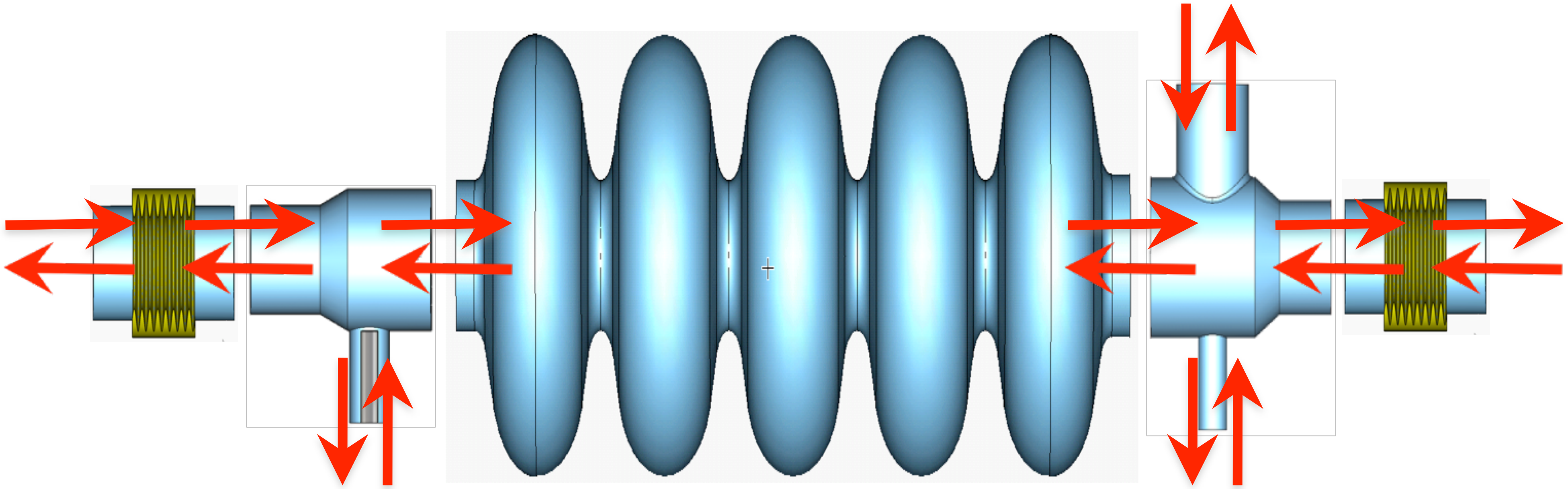

- Split structure in sections
- Compute scattering (S-) parameters of all sections individually with appropriate solvers
- Compute overall S-parameters as function of f with special algorithm*, applicable to any structure topology and mode number
- *: **e.g.:** H.-W. Glock, K. Rothemund, U. van Rienen: "CSC - A System for Coupled S-Parameter Calculations", TESLA-Report 2001-25 **or** K. Rothemund, H.-W. Glock, U. van Rienen: "Eigenmode Calculation of Complex RF-Structures using S-Parameters", IEEE Transactions on Magnetics, Vol. 36, (2000): 1501-1503 and references therein

Concatenation procedure based on scattering properties: Coupled S-Parameter Computation = CSC

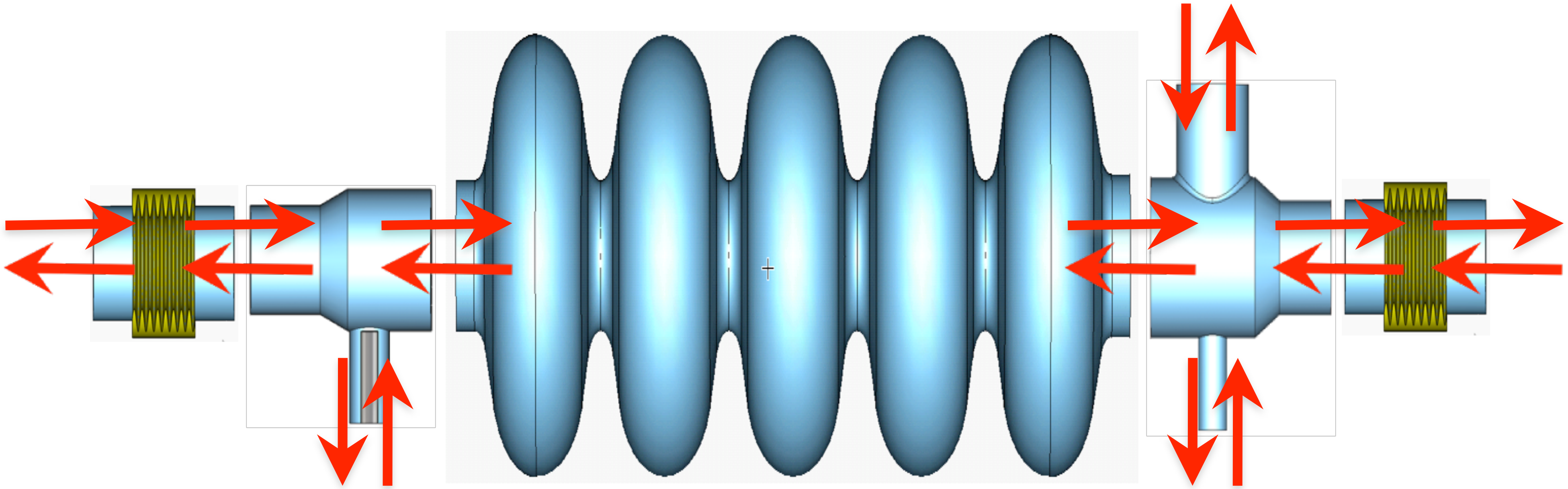

- Split structure in sections
- Compute scattering (S-) parameters of all sections individually with appropriate solvers
- Compute overall S-parameters as function of f with special algorithm*, applicable to any structure topology and mode number
- Derive loaded Q-values from S-parameter spectra

Using Pole-fitting algorithm* to determine loaded Q's

$$S_{21}(f) = \sum_k \frac{a_k}{2\pi i f - p_k} \qquad Q_k = -\frac{\mathrm{Im}\{p_k\}}{2\,\mathrm{Re}\{p_k\}}$$

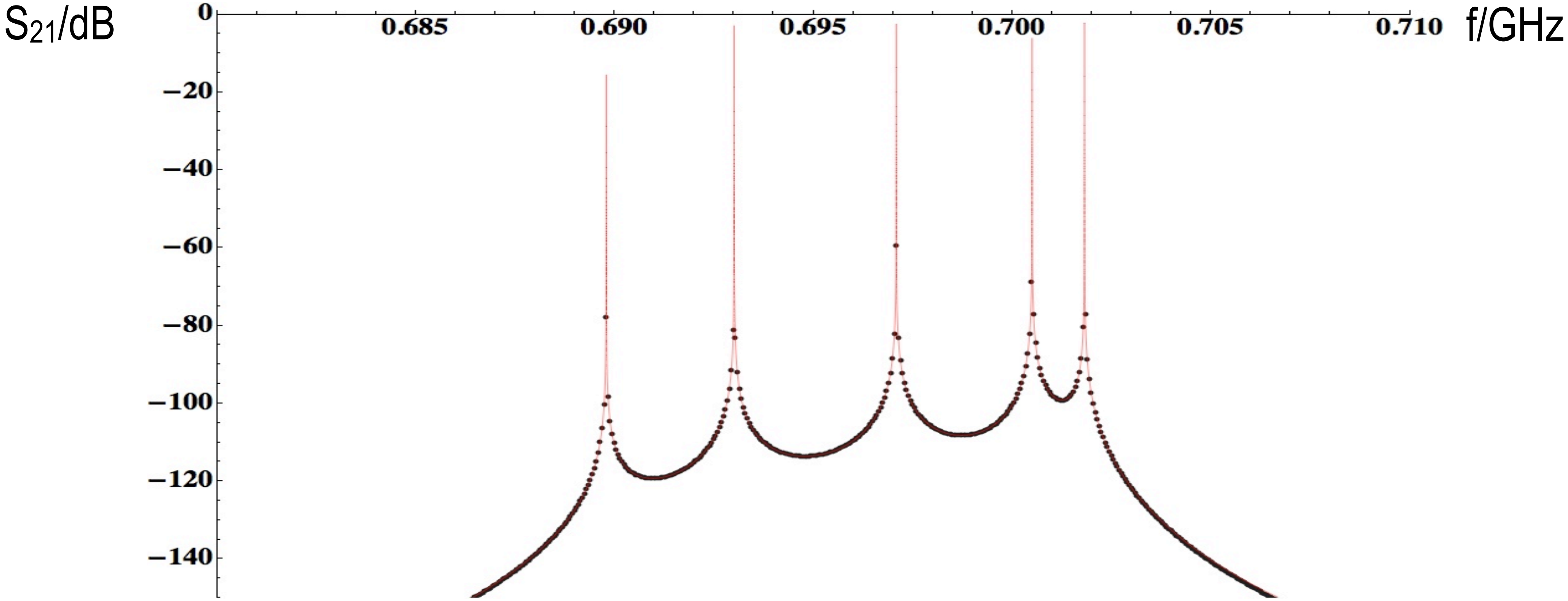

fundamental mode passband - dots: cstStudio© computation - line: fit result

*: Hecht, Rothemund, Glock, van Rienen: "Computation of RF properties of long and complex structures", Proc. EPAC 2002

Q_{ext} computations based on:

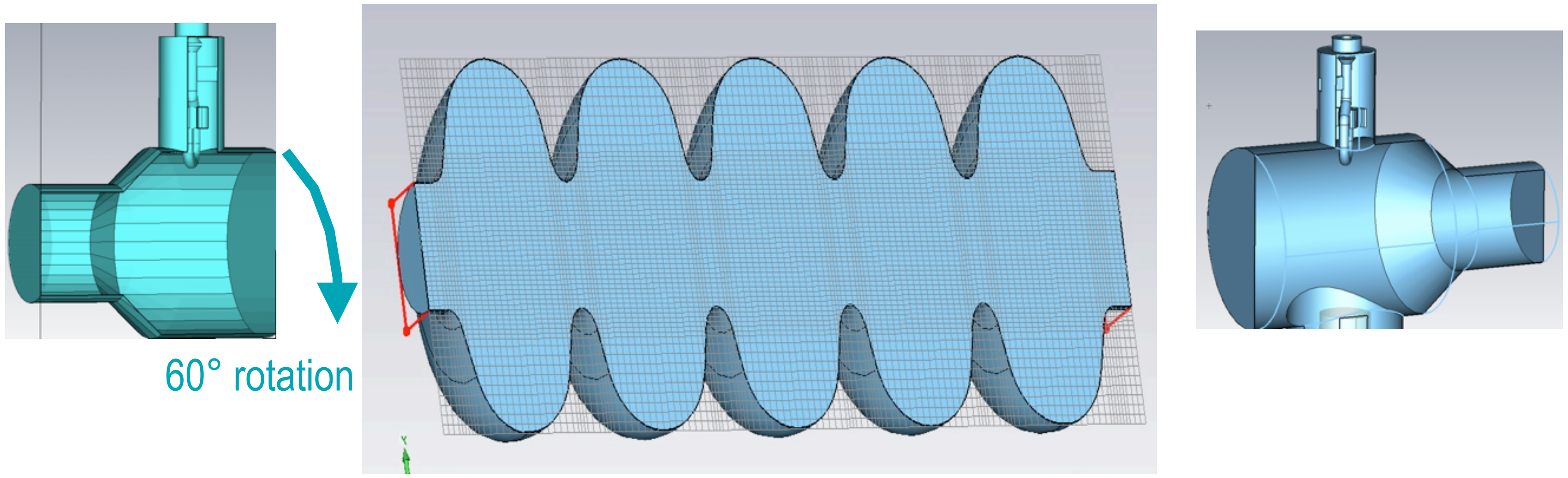

- CSC*-coupling of 8 modes in D=130mm / 140mm-coupler-cavity-connections (TE_{11},TM_{01}, TE_{21},TM_{11},TE_{01}), frequency range 0.6 ... 3 GHz
- right coupler with power coupler (100mm coax, 50 Ohm, penetration depth freely chosen, coax termination short / match)
- D=80mm beam pipes left open (but there most below cut-off: TE_{11} - 2.196 GHz, TM_{01} - 2.869 GHz, TE_{21} - 3.643 GHz, TM_{11}/TE_{01} - 4.571 GHz)

*: compare appendix

Why looking for a single S-parameter during tuning?:

Fundamental mode is of TM_0-type (no dependence on angle around axis).

Thus it directly couples only to TM_{01}, TM_{02}, ... waveguide modes, all below cut-off @ 704 MHz.

Neglecting all higher types than TM_{01} causes very small error but significantly reduces numerical effort.

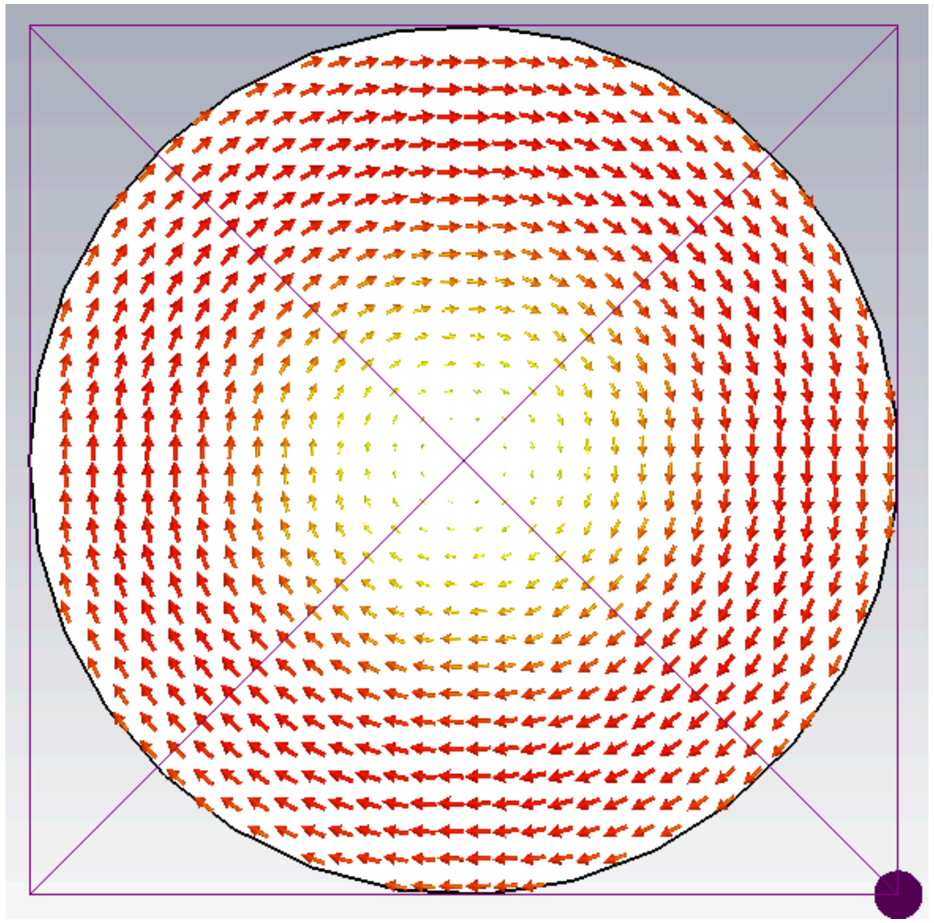

TM01-Mode H-field

Well-established Time-Domain/Fourier Procedure - Now** in Discontinuous Galerkin FEM*-Formulation

Maxwell

$$\begin{aligned} \partial_t \mathbf{E} &= \frac{1}{\varepsilon} \nabla \times \mathbf{H} \\ \partial_t \mathbf{H} &= -\frac{1}{\mu} \nabla \times \mathbf{E} \end{aligned}$$

DG-FEM discretized Maxwell

$$\begin{aligned} \partial_t \underline{\mathbf{E}} &= \frac{1}{\varepsilon} \underline{\underline{\mathbf{M}}}_k^{-1} \underline{\underline{\mathbf{S}}}_k \underline{\mathbf{H}} + \frac{1}{\varepsilon} \underline{\underline{\mathbf{M}}}_k^{-1} \underline{\underline{\mathbf{L}}}_k \cdot (\mathbf{n} \times (\mathbf{F}_E - \mathbf{F}_E^*)) \\ \partial_t \underline{\mathbf{H}} &= \underbrace{-\frac{1}{\mu} \underline{\underline{\mathbf{M}}}_k^{-1} \underline{\underline{\mathbf{S}}}_k \underline{\mathbf{E}}}_{\text{local on each element}} \underbrace{- \frac{1}{\mu} \underline{\underline{\mathbf{M}}}_k^{-1} \underline{\underline{\mathbf{L}}}_k \cdot (\mathbf{n} \times (\mathbf{F}_H - \mathbf{F}_H^*))}_{\text{coupling with adjacent elements}} \end{aligned}$$

- Strong locality => well suited for massive parallel computations
- High order approximation of field quantities => minimizes numerical dispersions effects
- Fully explicit, even on unstructured grids => Geometric flexibility and computational high efficiency

*J. Hesthaven and T. Warburton, "Nodal high-order methods on unstructured grids: I. time-domain solution of maxwell's equations," Journal of Computational Physics, no. 181, pp. 186–221, 2002.

**C. Potratz, H.-W. Glock, U. van Rienen: Time Domain Field and Scattering Parameter Computation in Waveguide Structures by GPU-Accelerated Discontinuous-Galerkin Method, submitted to IEEE-MTT

The Cluster (current configuration)

NVidia GPGPU (General Purpose Graphic Processing Unit, source: www.nvidia.com)

- Currently six nodes with 4 Cores and 2 GPUs
- Combined peak performance 18 TFlop/s (GPU only) ~= 9k€
- Used for 3D-CEM simulation (our DG-FEM code running the GPUs) for parallel optimization
- Mechanical/Thermal simulations using Code Aster* (CPU only)
- Pre/Postprocessing (triangulation, scattering parameter computation,etc.)

*www.code-aster.com

Influence of the fixture onto the HF properties

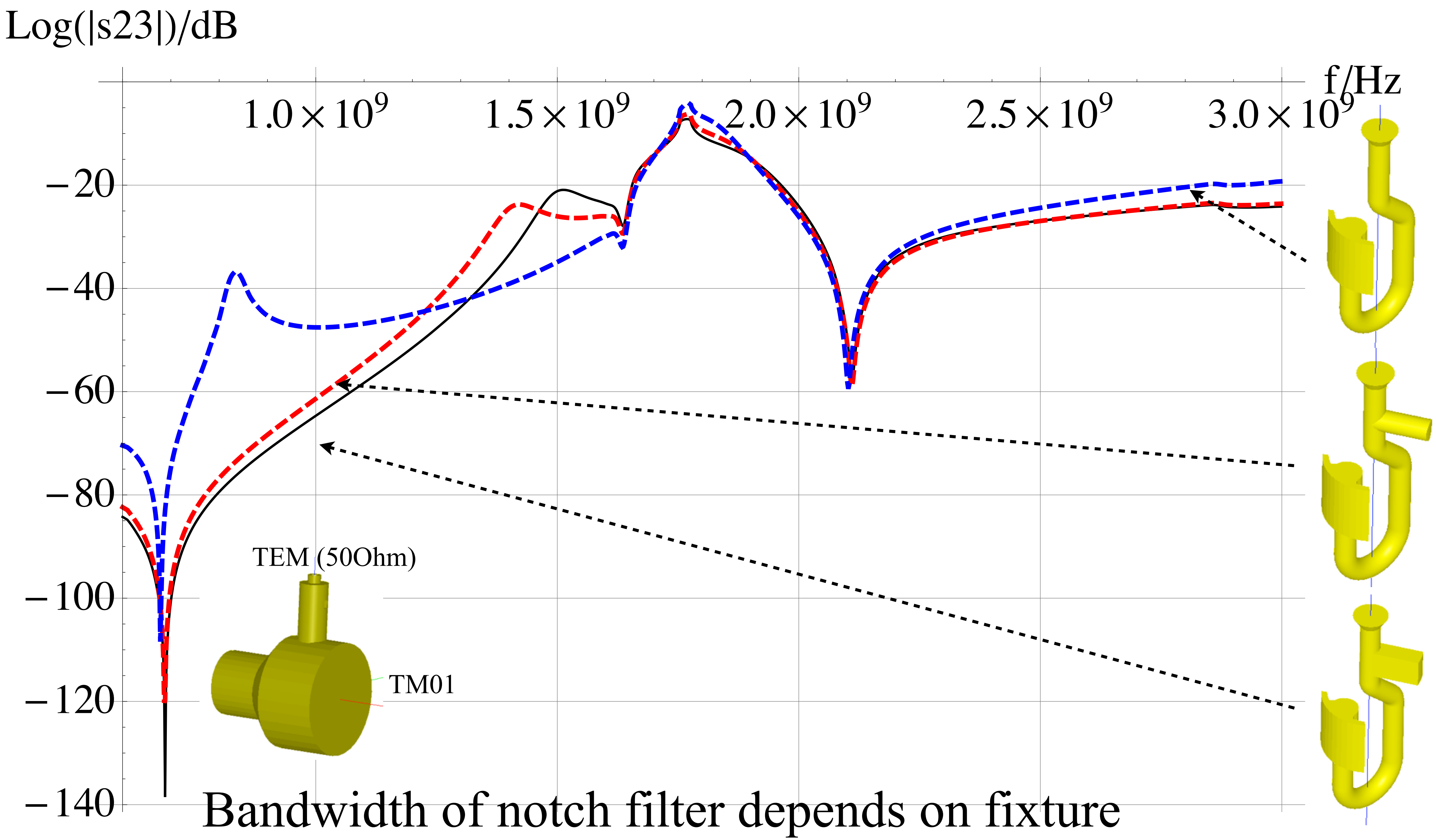

Bandwidth of notch filter depends on fixture