ATLAS off-Grid sites (Tier-3) monitoring. From local fabric monitoring to global overview of the VO computing activities

Many ATLAS Institutes and National Communities already built or have plans to build Tier-3 facilities. Tier-3 centers consist of non-pledged resources mostly dedicated for the data analysis by the geographically close or local scientific groups. Tier-3 sites comprise a range of architectures and many do not possess Grid middleware, which would render application of Tier-2 monitoring systems useless.

Goals of the project

- Provide reasonable monitoring solution for *'off grid'* sites (unplugged geographically close computing recourses)
- Monitoring of computing facility of local groups with collocated storage system (Tier-1+Tier-3, Tier-2+Tier-3)
- Present Tier-3 sites activity on global level
- Data transfer monitoring across XRootD federation

Tier 3 sites monitoring levels

Levels of Tier-3 sites monitoring:

- Monitoring of the local infrastructure for site administration
- Central system for monitoring of the VO activities at Tier-3 sites

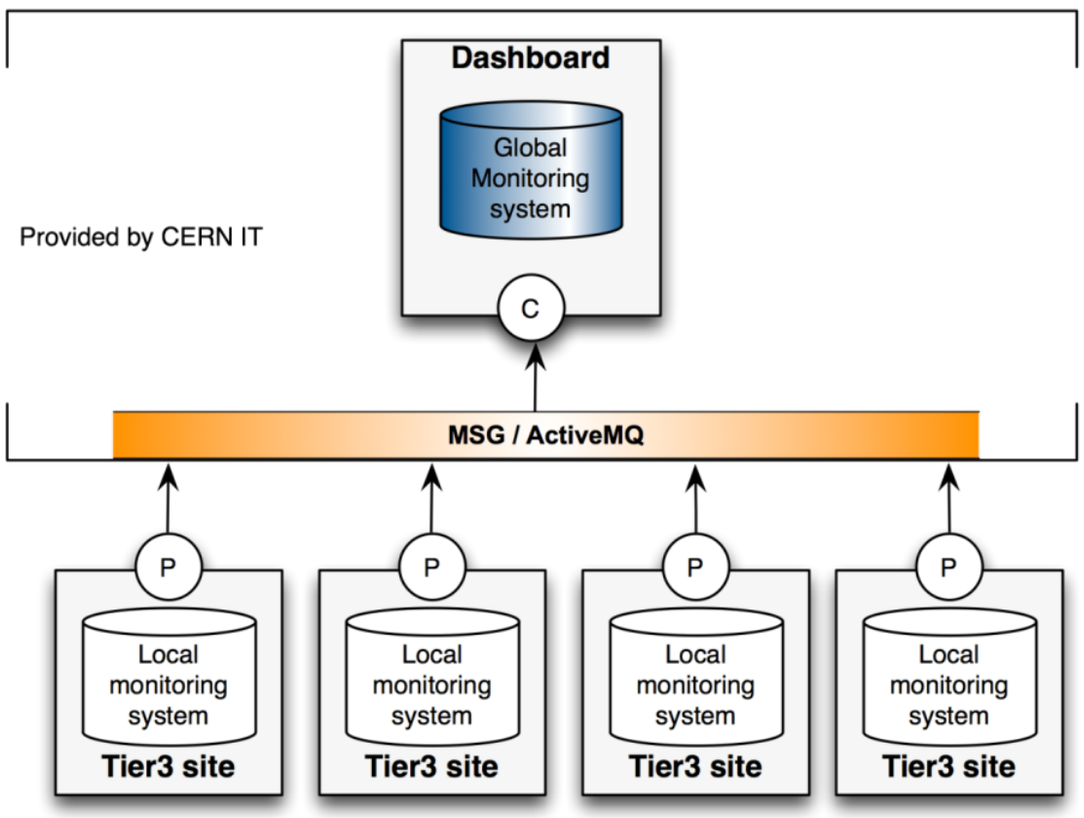

The objectives of the local monitoring system for a Tier-3 site:

- Detailed monitoring of the local fabric
- Monitoring of the batch system
- Monitoring of job processing
- Monitoring of the mass storage system
- Monitoring of VO computing activities at a local site

The objectives of the global Tier-3 monitoring:

- Monitoring of the VO usage of the Tier-3 resources in terms of data transfer, data access and job processing and the quality of the provided service based on the job processing and data transfer monitoring metrics

Site monitoring

Based on Ganglia monitoring system

- Collect basic metrics
- Plugin system for monitoring specific metrics
- Job processing systems, storage solutions, specifics protocols
- Special solution for XRootD and PROOF monitoring

XRootD

- Summary: health of the system
- Detailed stream: file access

PROOF

- Set of job related parameters to collect: wall time, CPU time, memory consumption, number of read bytes, number of workers, exit code, number of processed events
- Information about data access from job: list of files, list of datasets

Global monitoring

Main components:

- Publisher on local site: intercommunicate with local DB and send information to MSG system
- MSG as transmitting system: provided and supported by CERN IT
- Backend: consumer(s) of messages and integration with Dashboard system

Data flows in T3MON

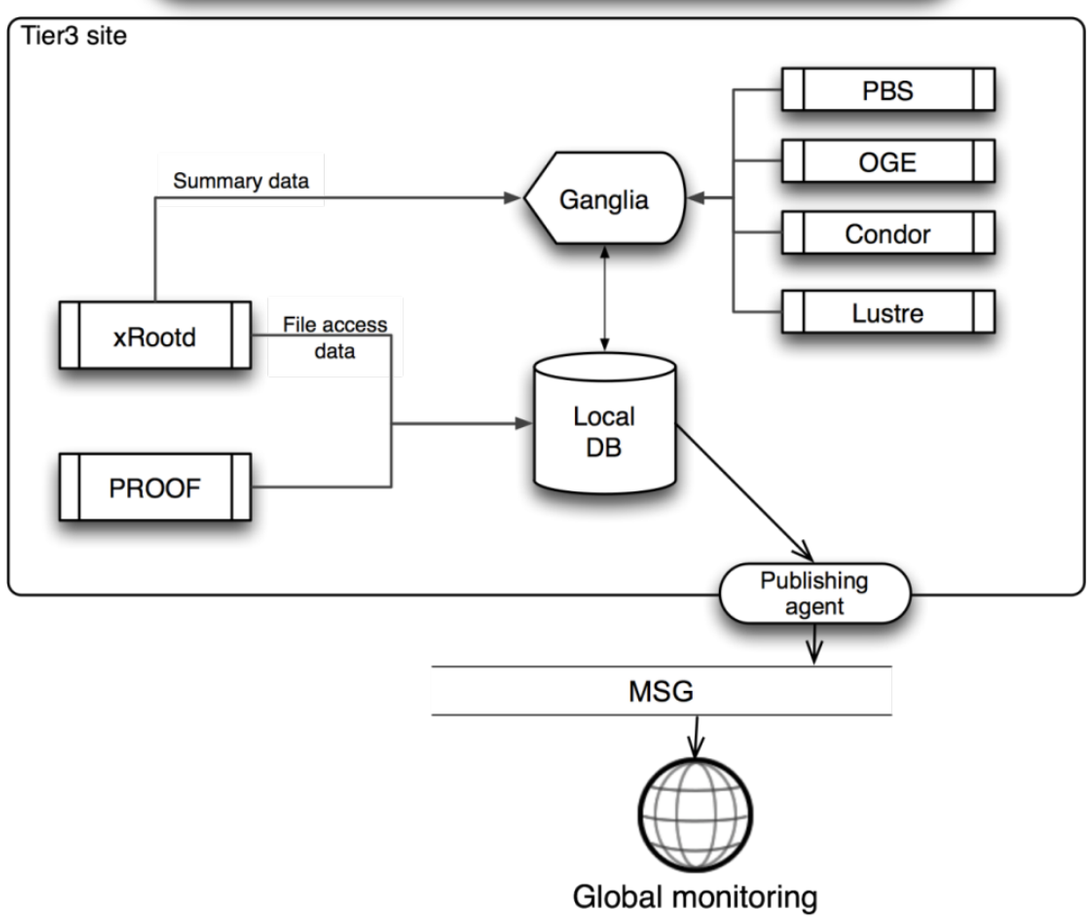

T3MON software suite enables local monitoring of the Tier-3 sites and the global view of the computing activities of the LHC virtual organizations at the Tier-3 sites.

Project home: https://svnweb.cern.ch/trac/t3mon/wiki/T3MONHome

Packages repository: http://t3mon-build.cern.ch/t3mon/

A. Petrosyan[1], D. Oleynik[1], S. Belov[1], J.Andreeva[2], I. Kadochnikov[1]on behalf of the ATLAS Collaboration
[1]Laboratory of information technologies, JINR
[2]IT, CERN

CHEP2012