New technique and results of cosmic ray investigations in the energy interval $10^{15} – 10^{19}$ eV

A.A.Petrukhin
for Russian-Italian collaboration DECOR

Contents

Introduction
New method of EAS investigations
NEVOD-DECOR experiment
Results of investigations
Discussion
Further plans
Conclusions

Introduction

- 100 years of cosmic ray investigations and
  > 50 years of CR with energies 10^{15} - 10^{20} eV.

- But the results for the energy spectrum and especially mass composition are not so definite and often even contradictory.

- Therefore the development of new approaches to EAS investigations in a wide energy interval is an important task.

Methods of EAS investigations

- Number of electrons N_e
  (in fact, mixture of charged particles)
- Number of muons, N_μ
- Energy deposit of EAS core, E_h
- Cherenkov radiation flux, F_{Ch}
- Fluorescence radiation flux, F_f
- Radio emission flux, F_r

New!

- Local muon density (1), D_μ - results
- Muon bundle energy (2), E_μ - plans

Existing approach to EAS investigations

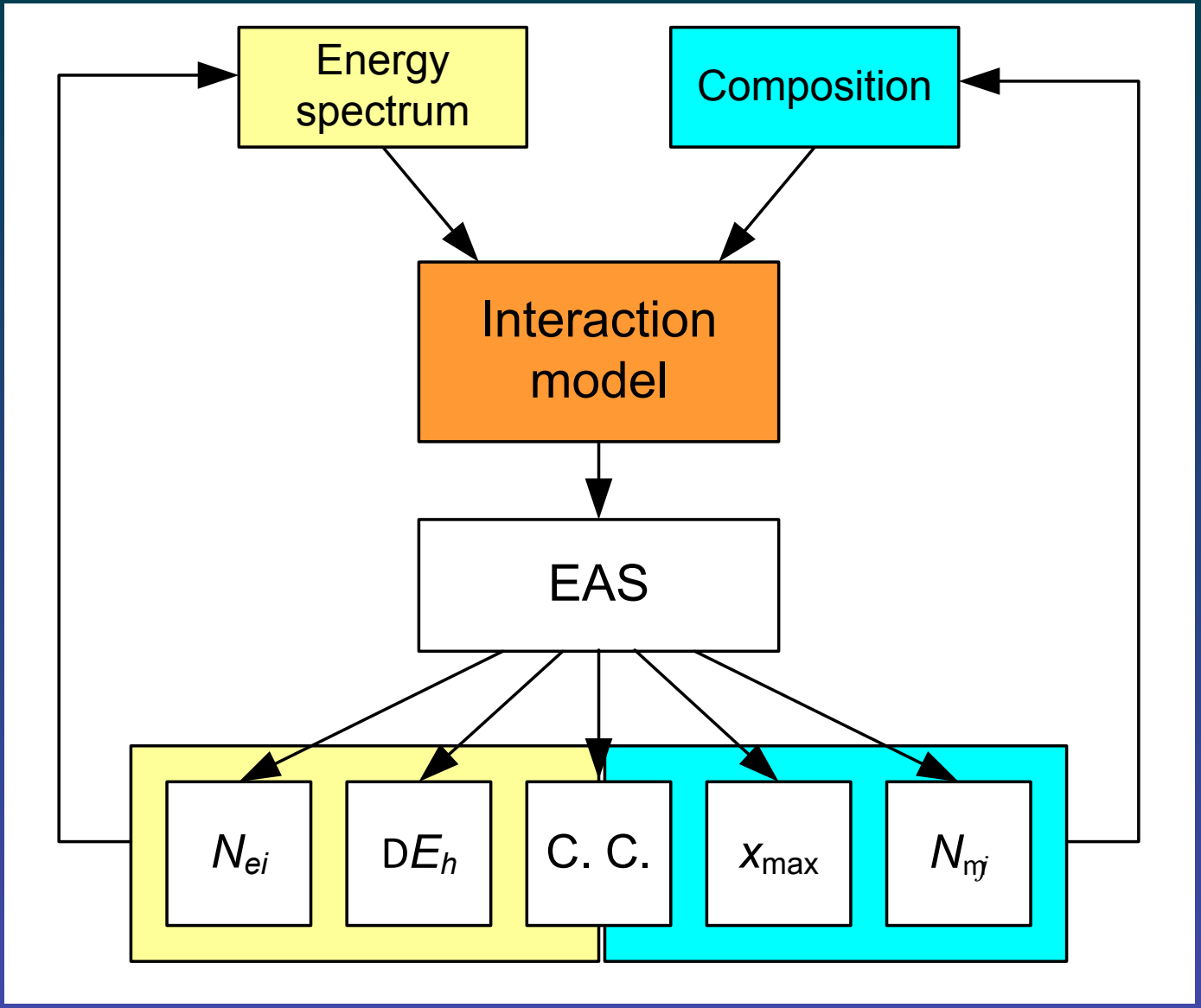

New (1) approach to EAS investigations

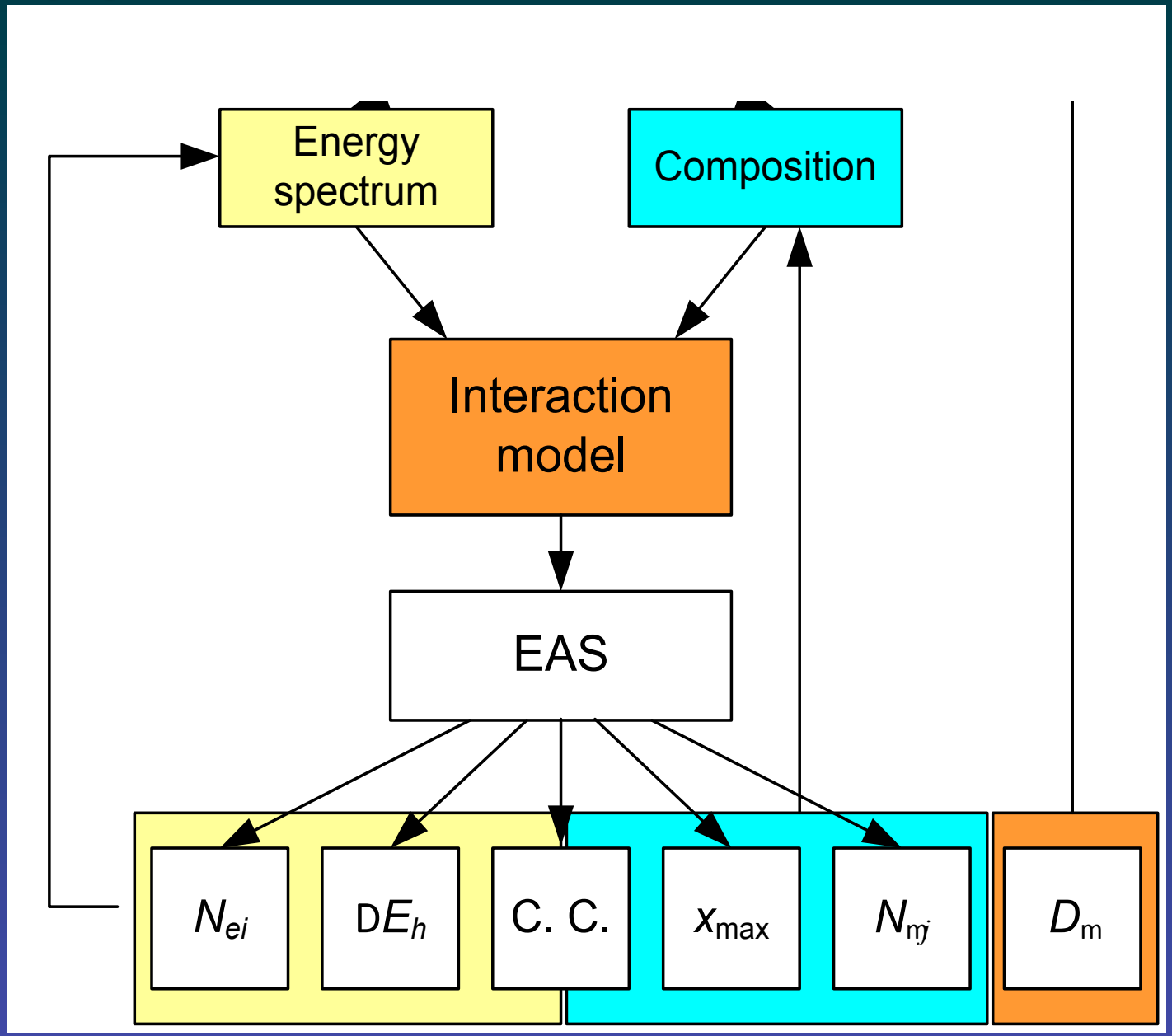

Inclined EAS detection

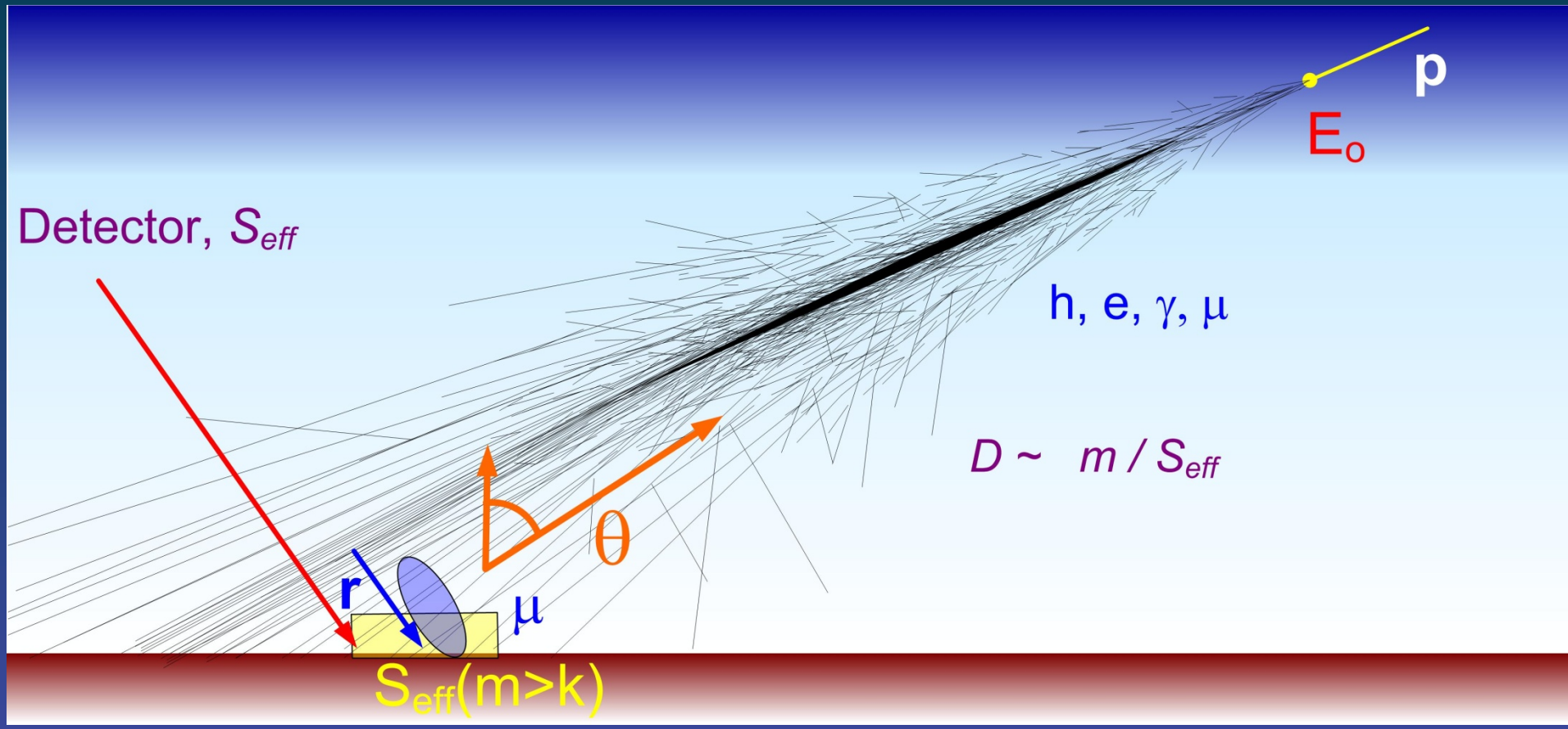

μ-EAS transverse section VS zenith angle

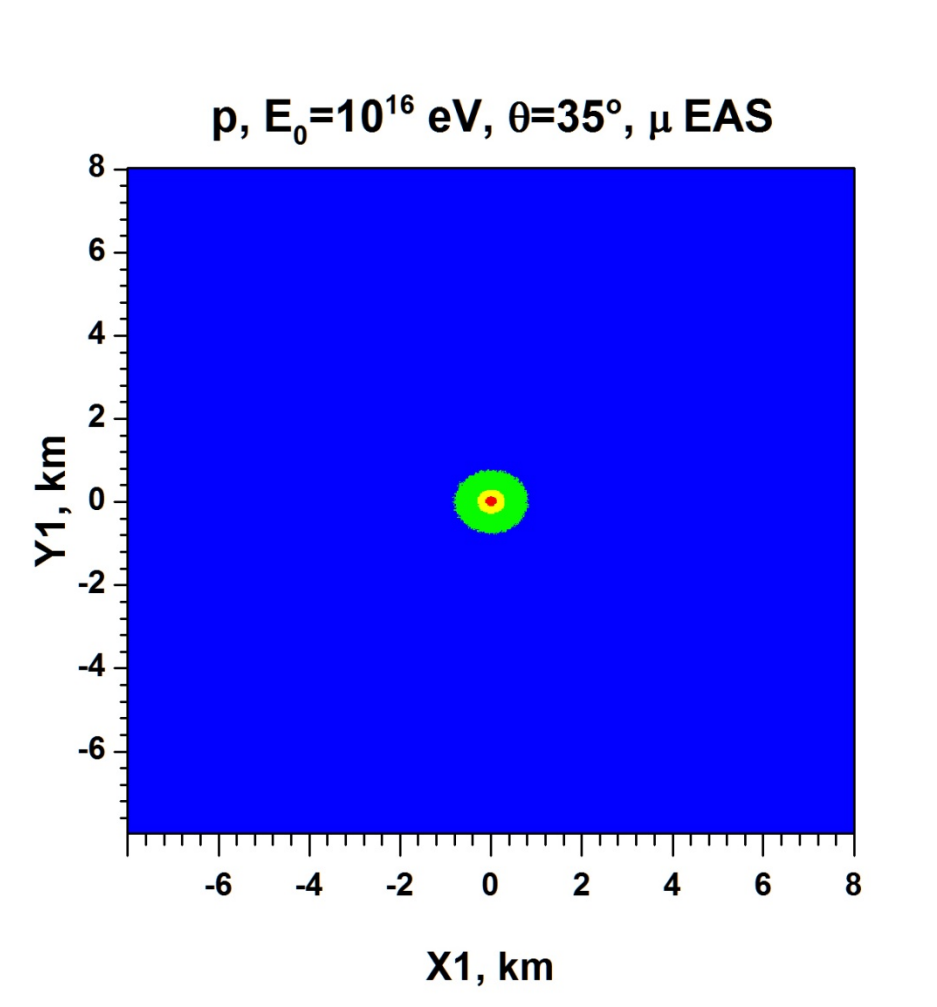

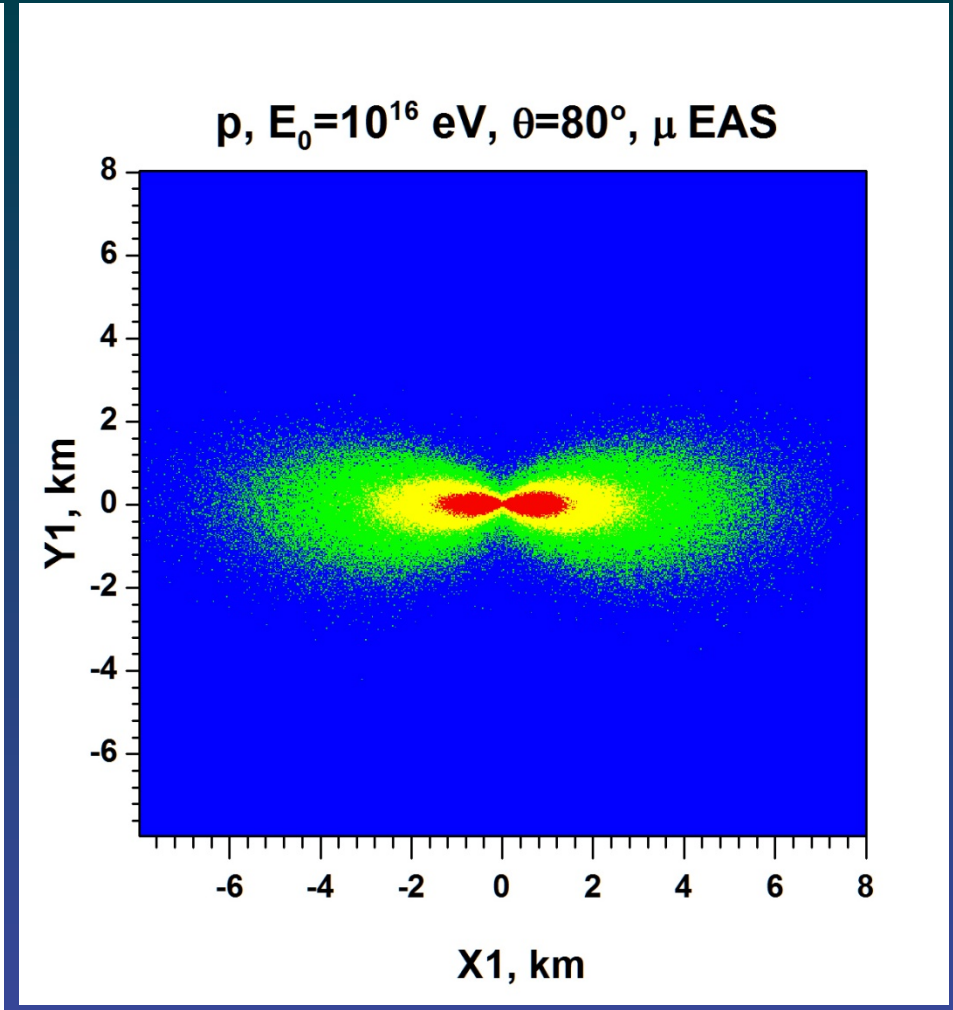

Number of detected EAS depends on:

shower array dimensions

shower dimensions only

Effective collection area

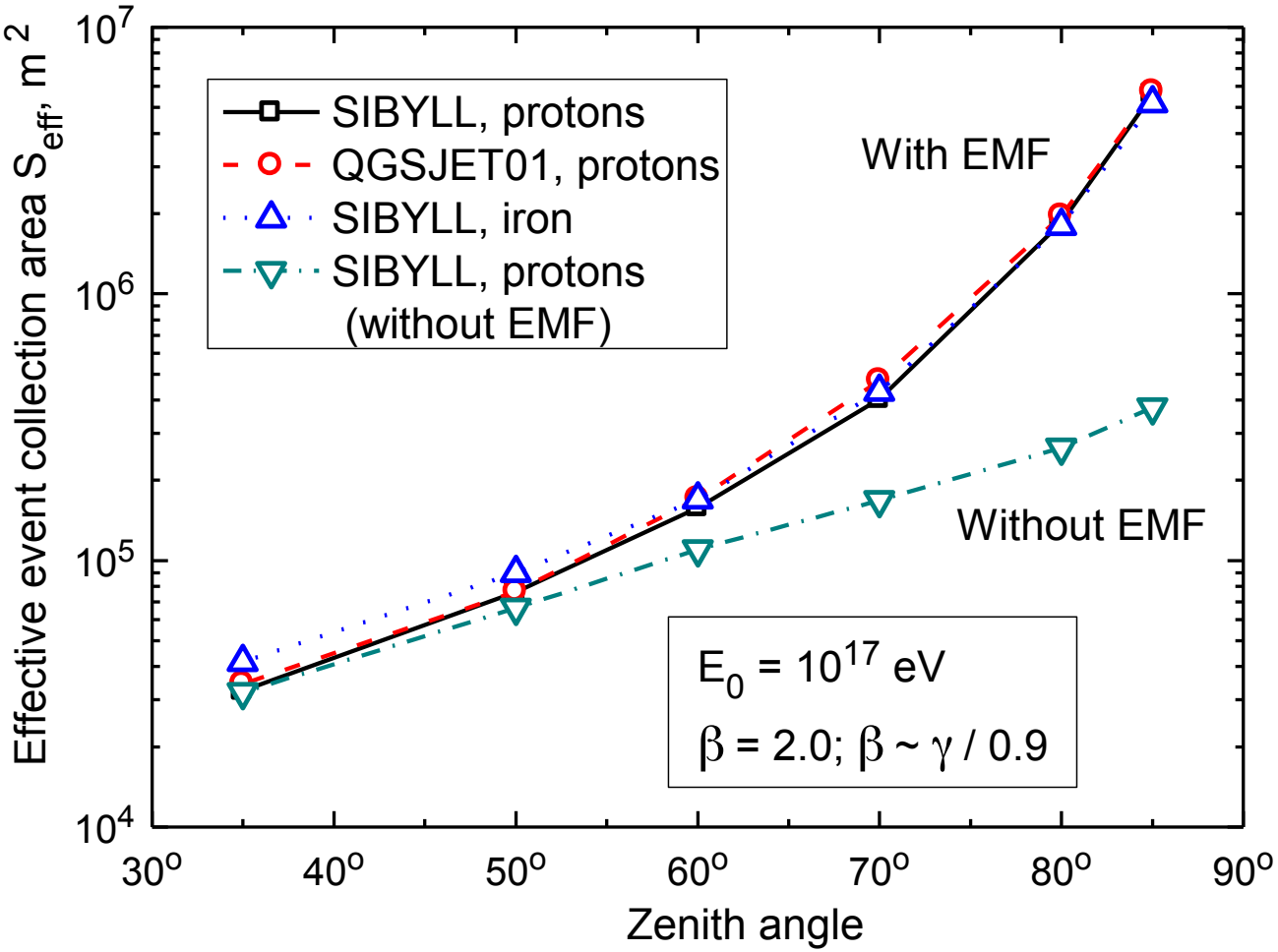

Contribution of primary energies at different zenith angles

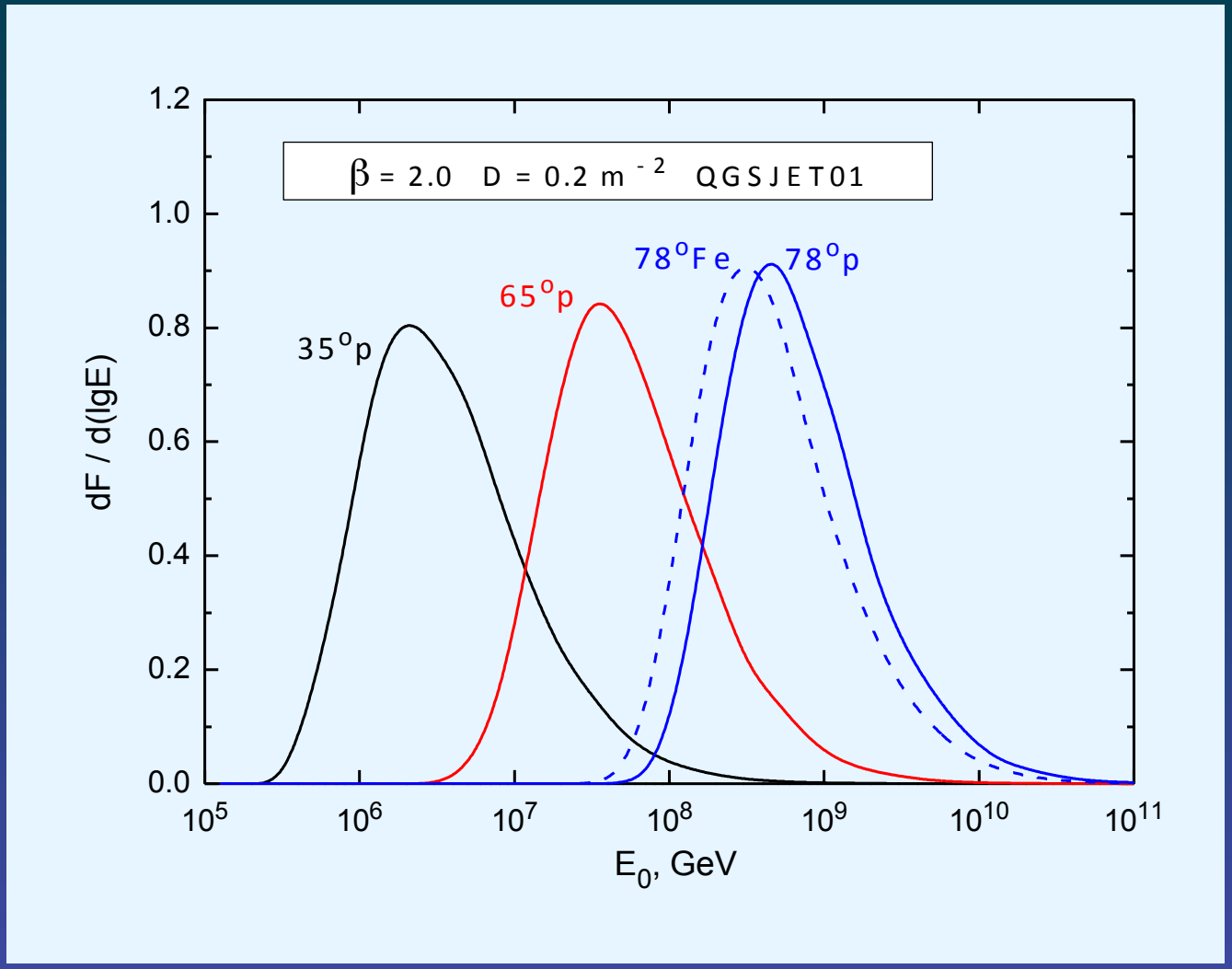

Wide angular interval – very wide range of primary energies !

General view of NEVOD-DECOR complex

Coordinate-tracking detector DECOR (~115 m^2)

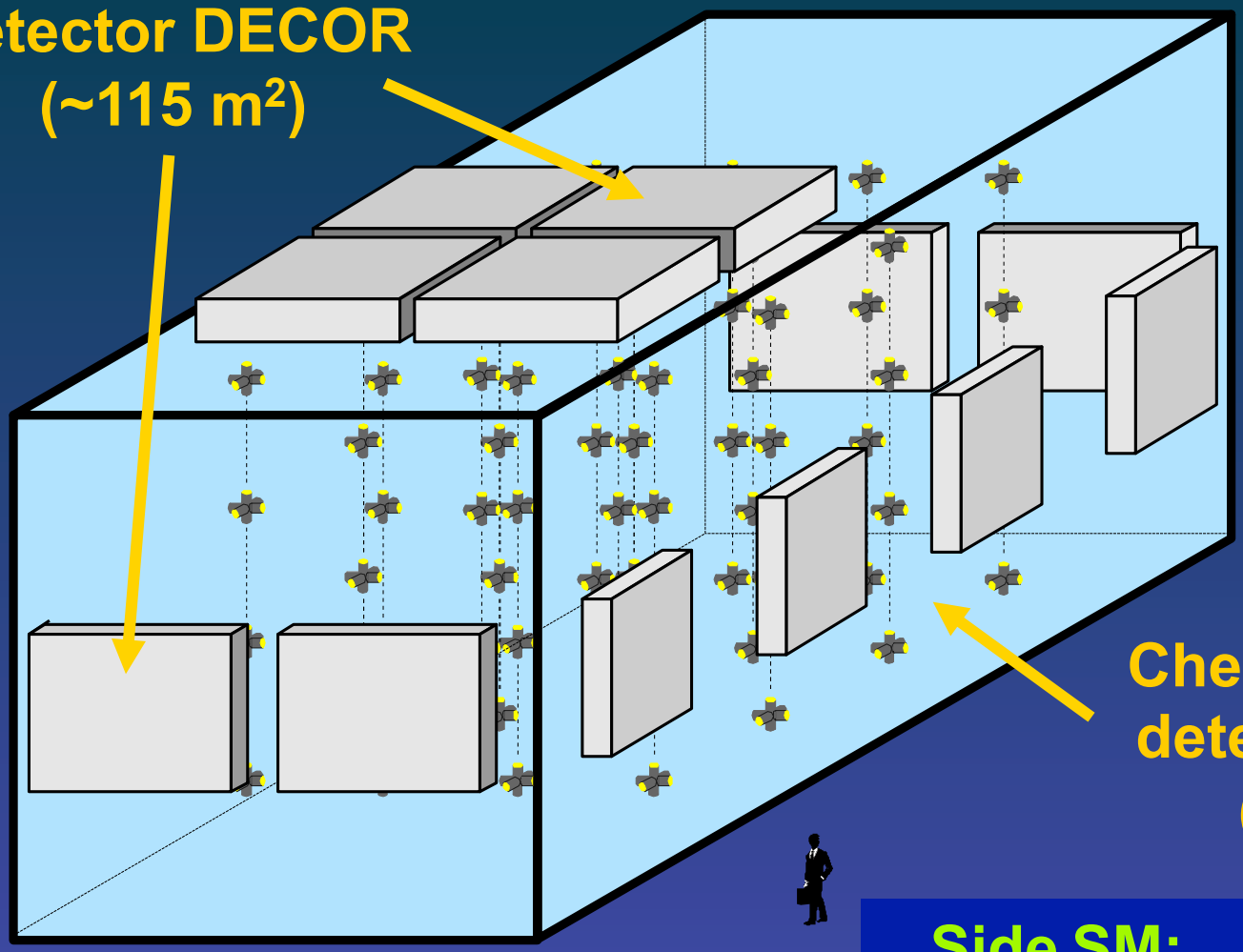

Cherenkov water detector NEVOD (2000 m^3)

Side SM: 8.4 m^2 each

- $\sigma_x \sim 1$ cm; $\sigma_\psi \sim 1°$

A typical muon bundle event in Side DECOR (9 muons, 78 degrees)

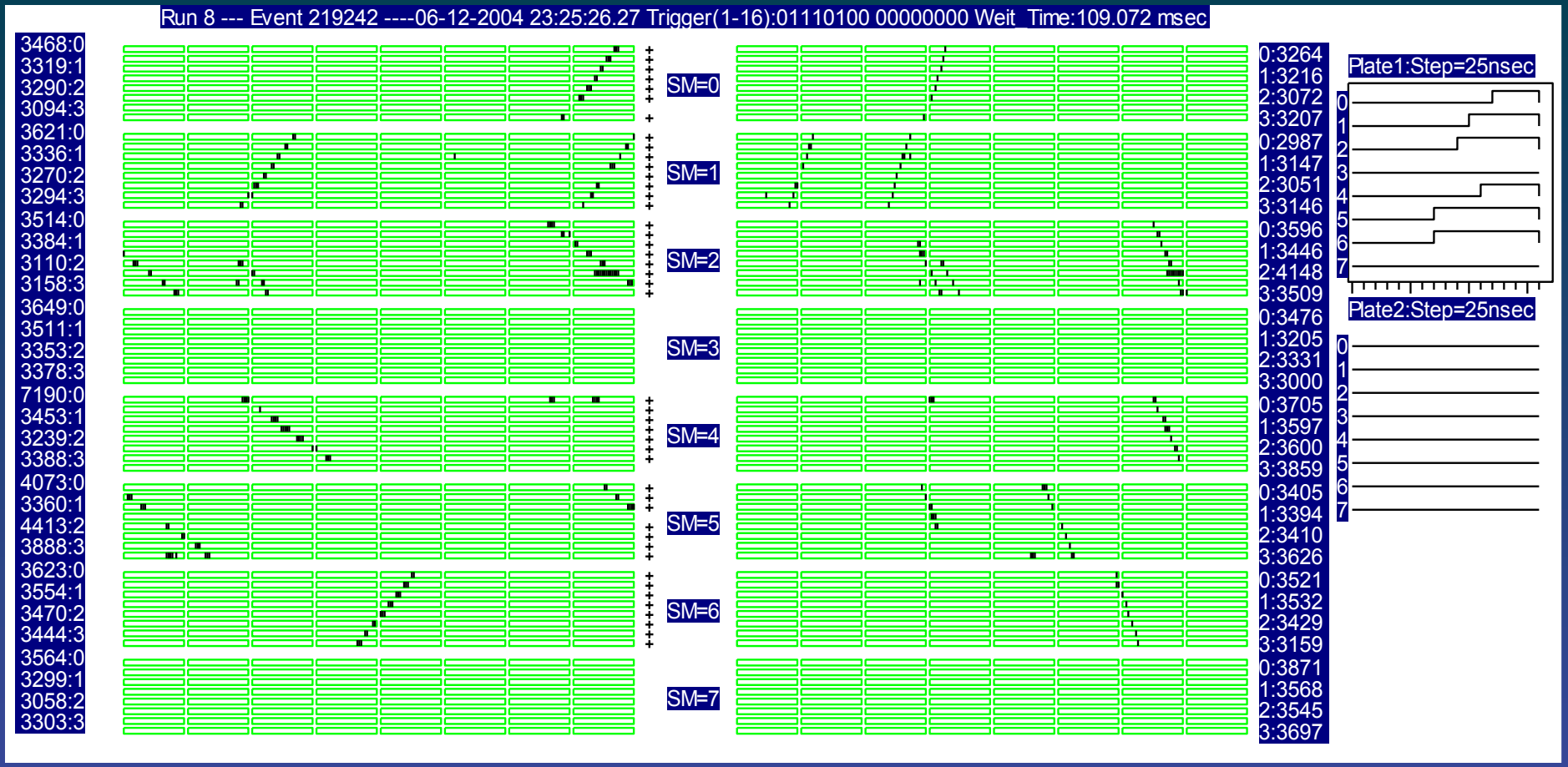

Y-projection

X-projection

Muon bundle event (geometry reconstruction)

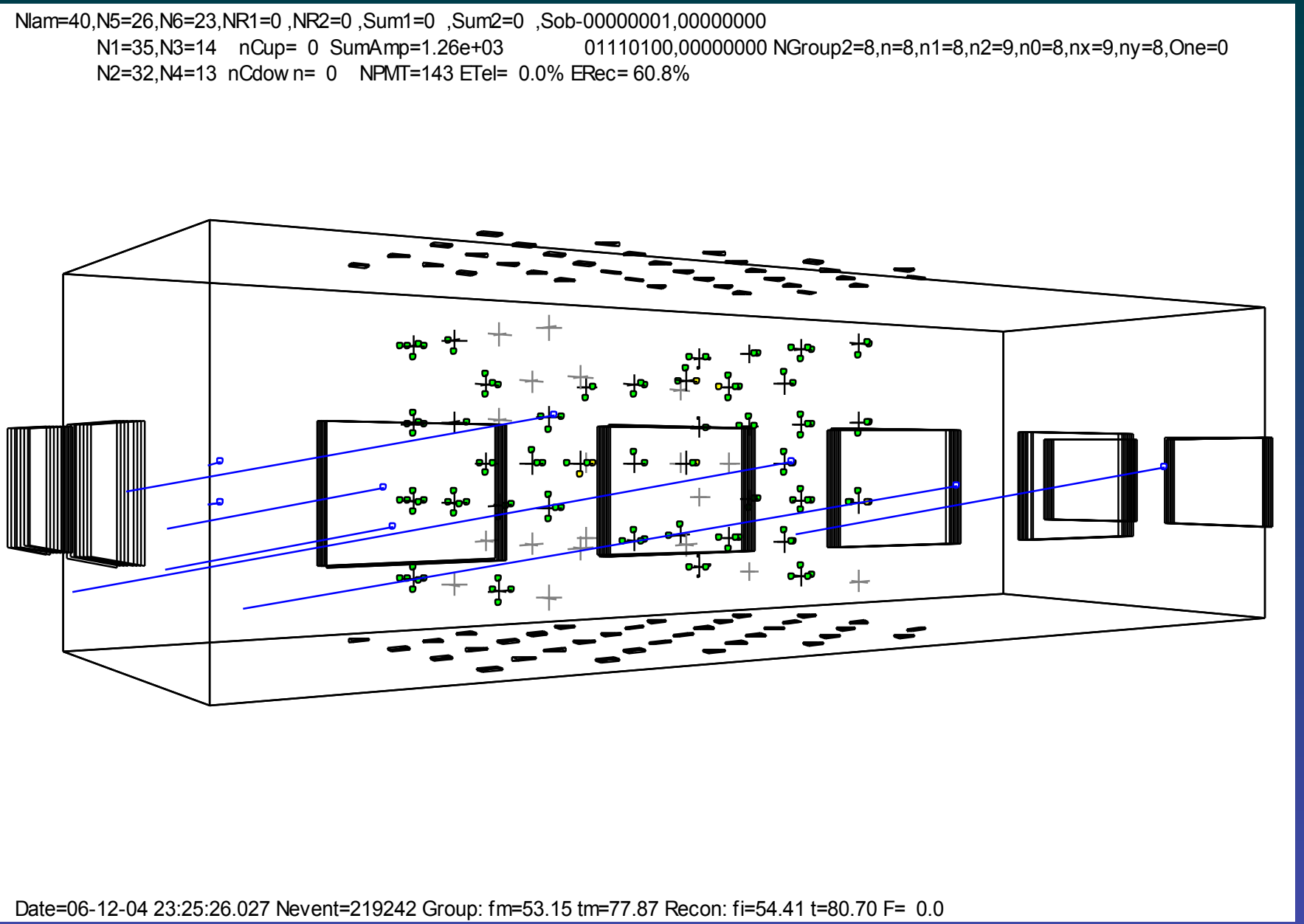

A “record” muon bundle event

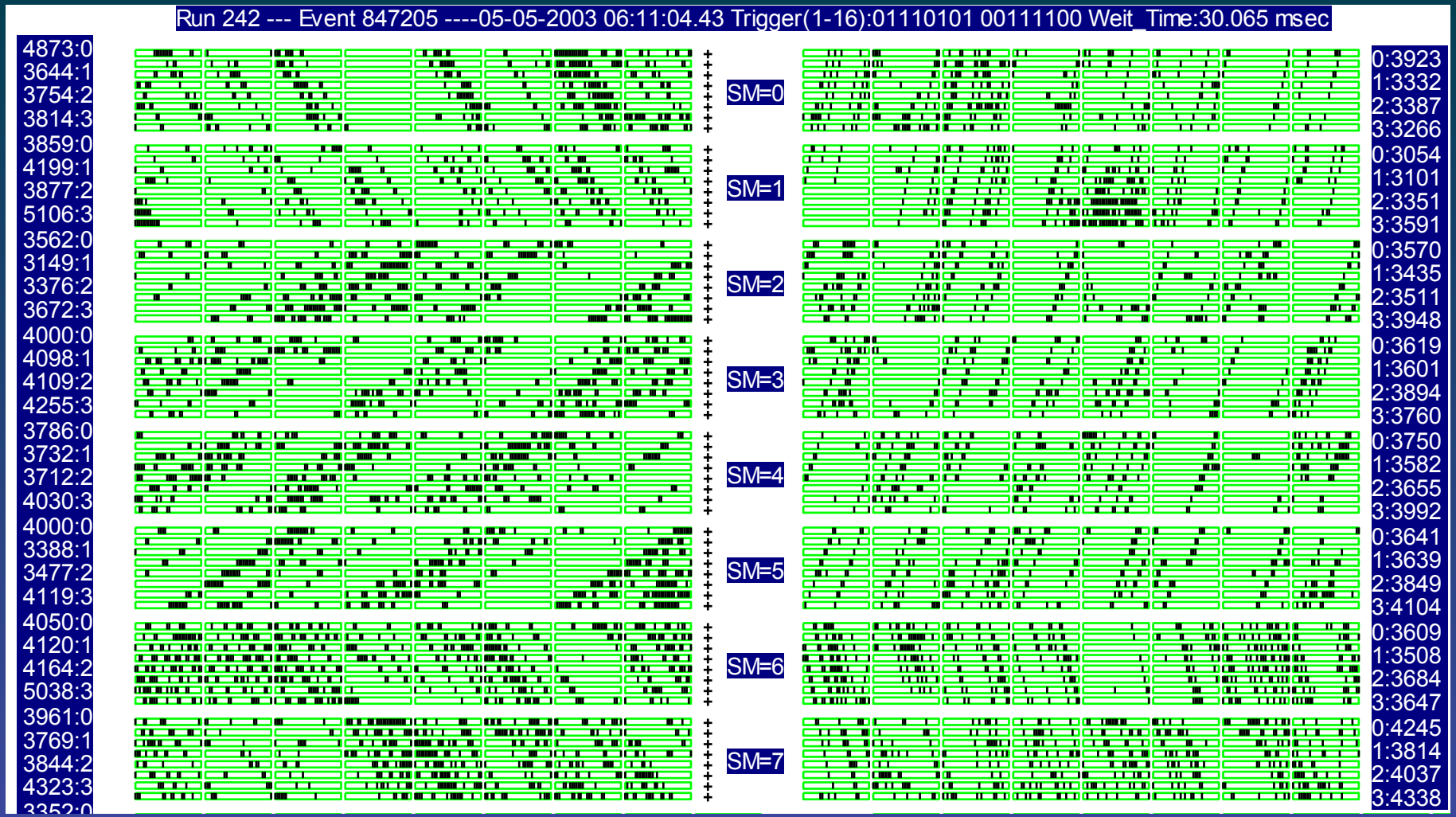

Y-projection **X-projection**

Muon bundle event (geometry reconstruction)

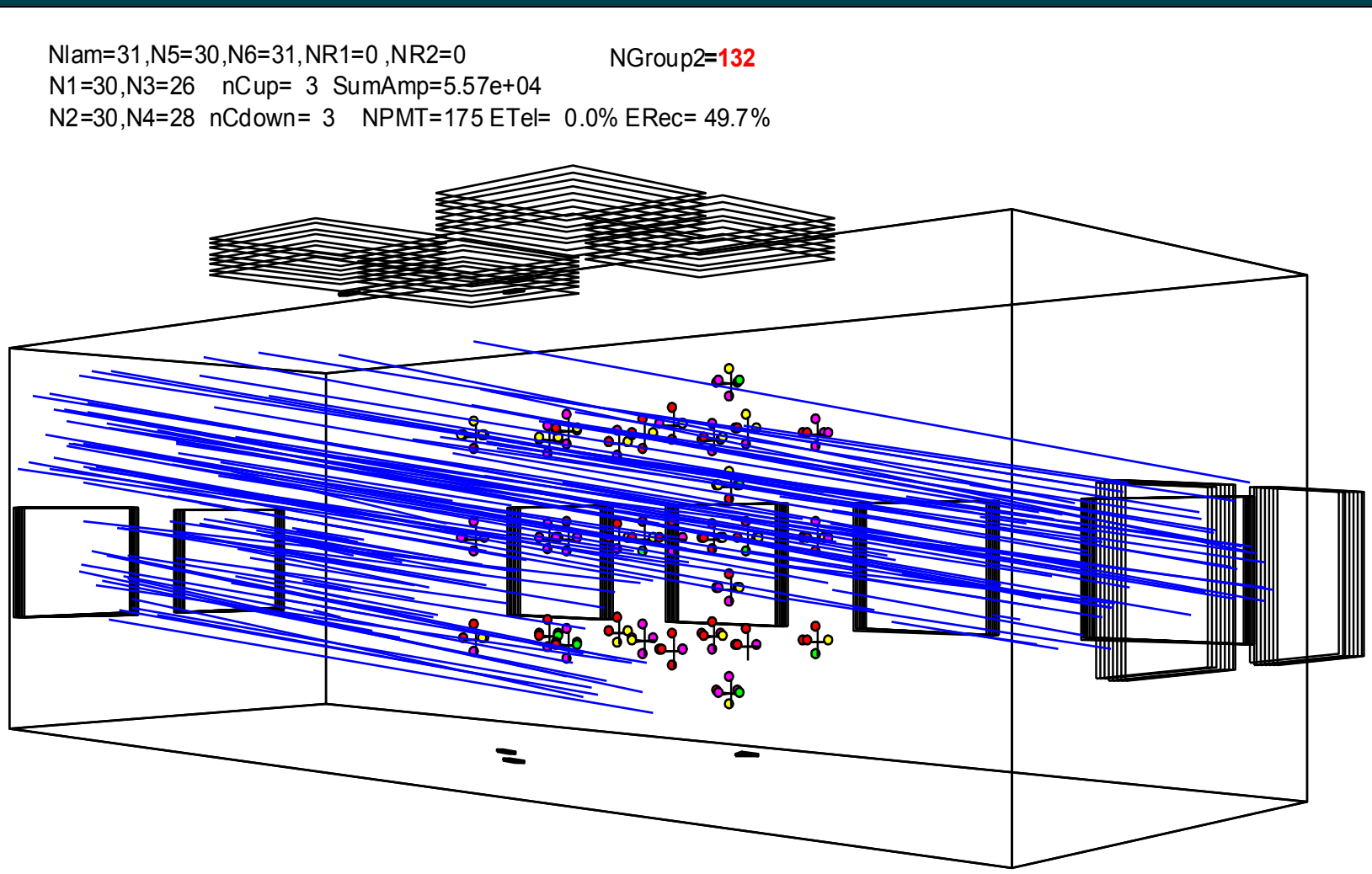

Results of muon bundle investigations

DECOR data. Muon bundle statistics

Muon multiplicity	Zenith angle range	Live time, (hour)	Number of events
≥ 3	30 – 60°	758	18137
≥ 5	30 – 60°	1296	8864
≥ 10	30 – 60°	2680	3272
≥ 3	≥ 60°	1552	4109
≥ 5	≥ 60°	10102	6786
≥ 10	≥ 60°	19922	2013
≥ 10	≥ 75°	19922	395

Effective primary energy range

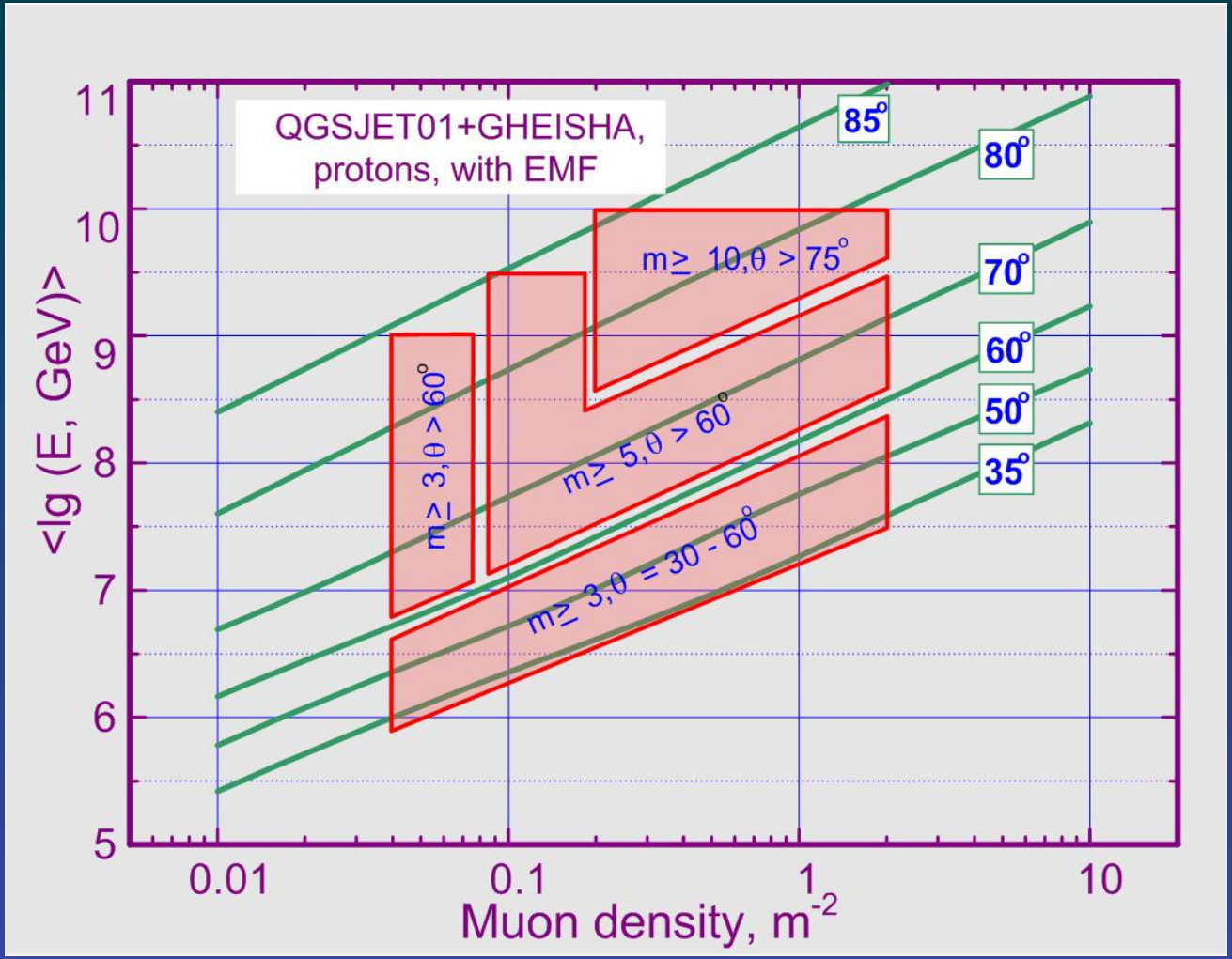

Lower limit ~ 10^{15} eV (limited by DECOR area).
Upper limit ~ 10^{19} eV (limited by statistics).

Low angles: around the “knee”

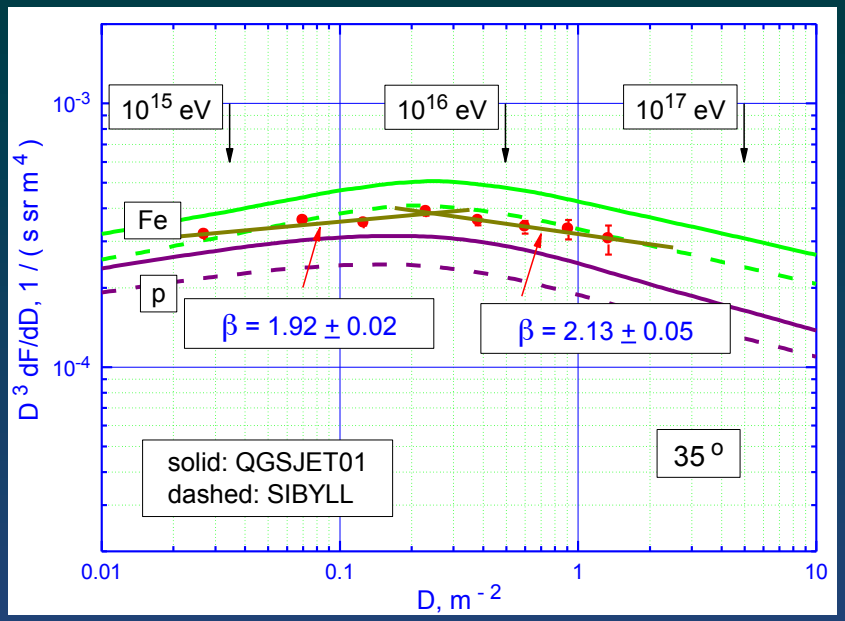

θ = 50° : 10^{16} – 10^{17} eV

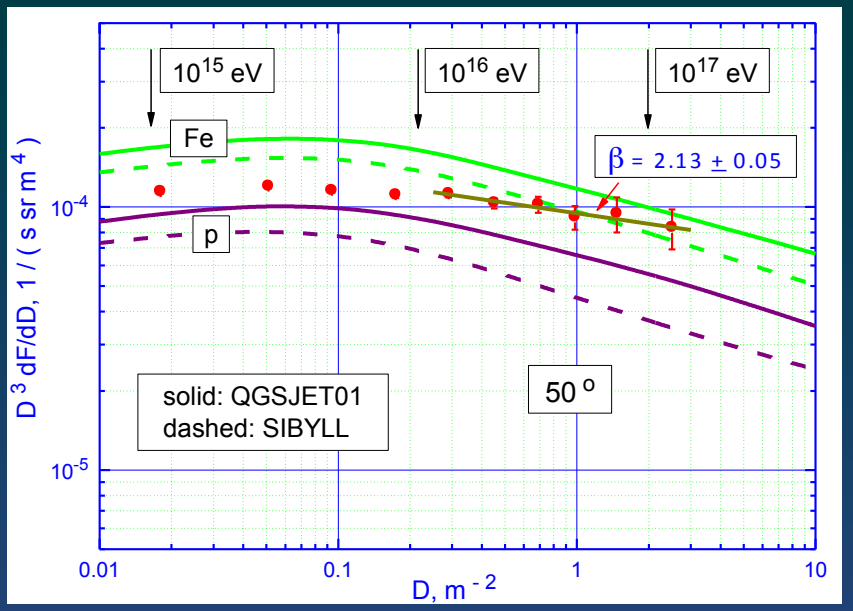

θ = 65° : 10^{16} – 10^{18} eV

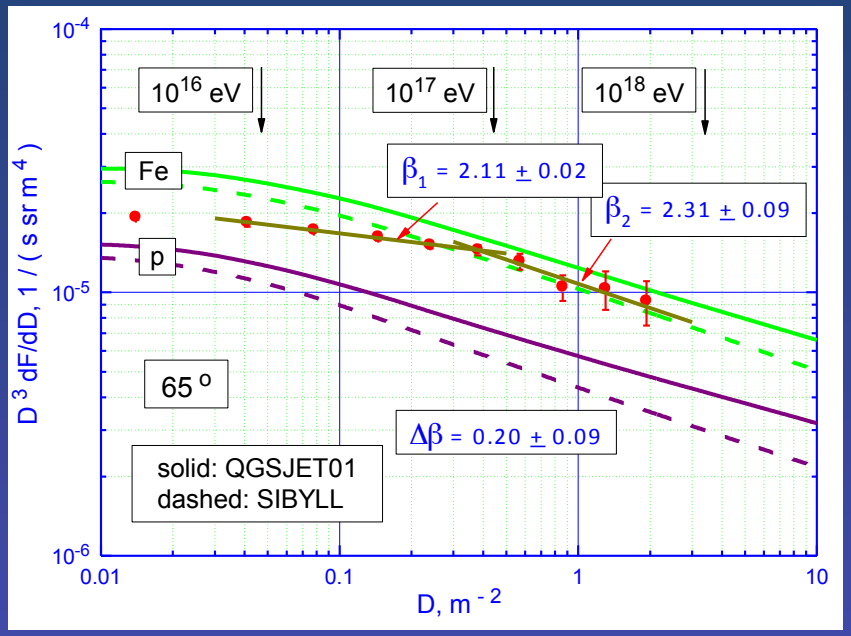

Large angles: around 10^{18} eV

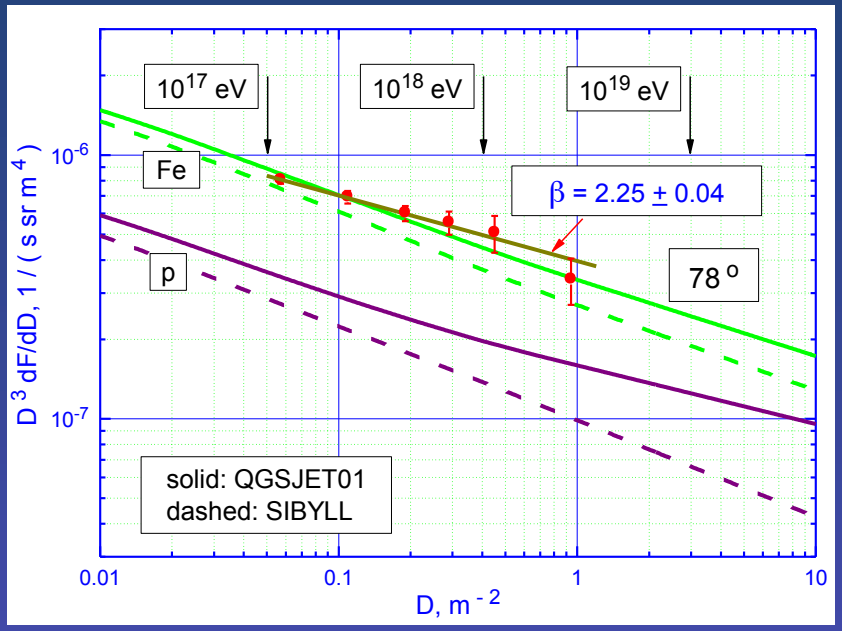

Comparison with other data

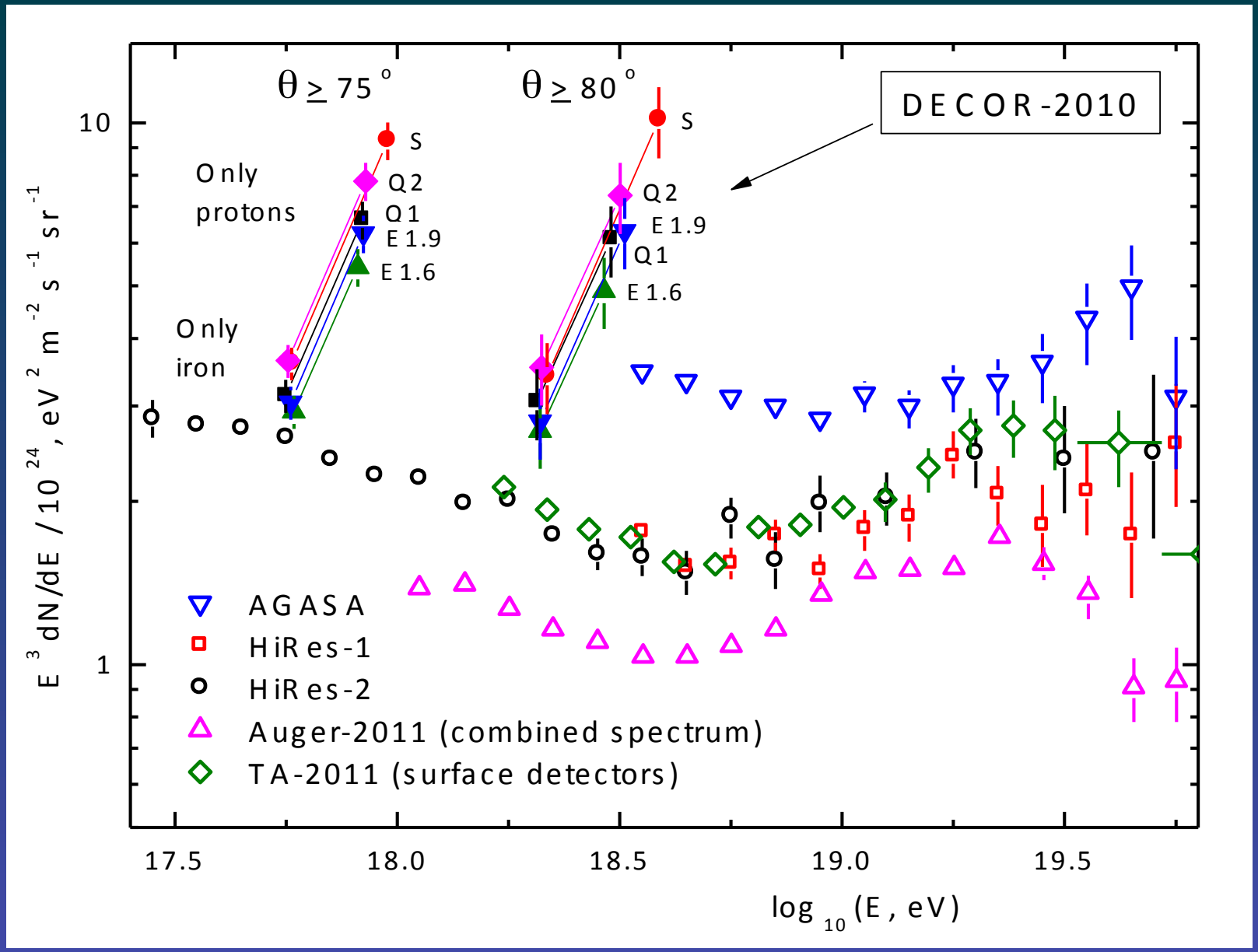

Conclusions-1

A new method of EAS investigations allows study cosmic rays in very wide interval from 10^{15} to 10^{18} eV and higher by means of the single relatively small detector.

The following results were obtained:

- detection of the knee (the energy scale calibration);
- observation of the second knee;
- some excess of muon bundles which is increased with energy and cannot be explained even for pure iron primary mass composition.

The problem of muons in CR investigations in talks of P. Privitero and T. Pierog was discussed yesterday but no ideas for its solution was proposed.

Proposition

Today all observed peculiarities in CR are explained by changes of primary energy spectrum and mass composition - **cosmophysical approach.**

But in principle these peculiarities can be explained through the changes of interaction model (**nuclear physical approach**).

In this case new processes of muon generation through decays of massive particles or states of matter can be considered.

How to check these two aproaches experimentally?

The only way is measurements of muon energy – the single parameter which is not measured by means of existing EAS arrays.

New (1) approach to EAS investigations

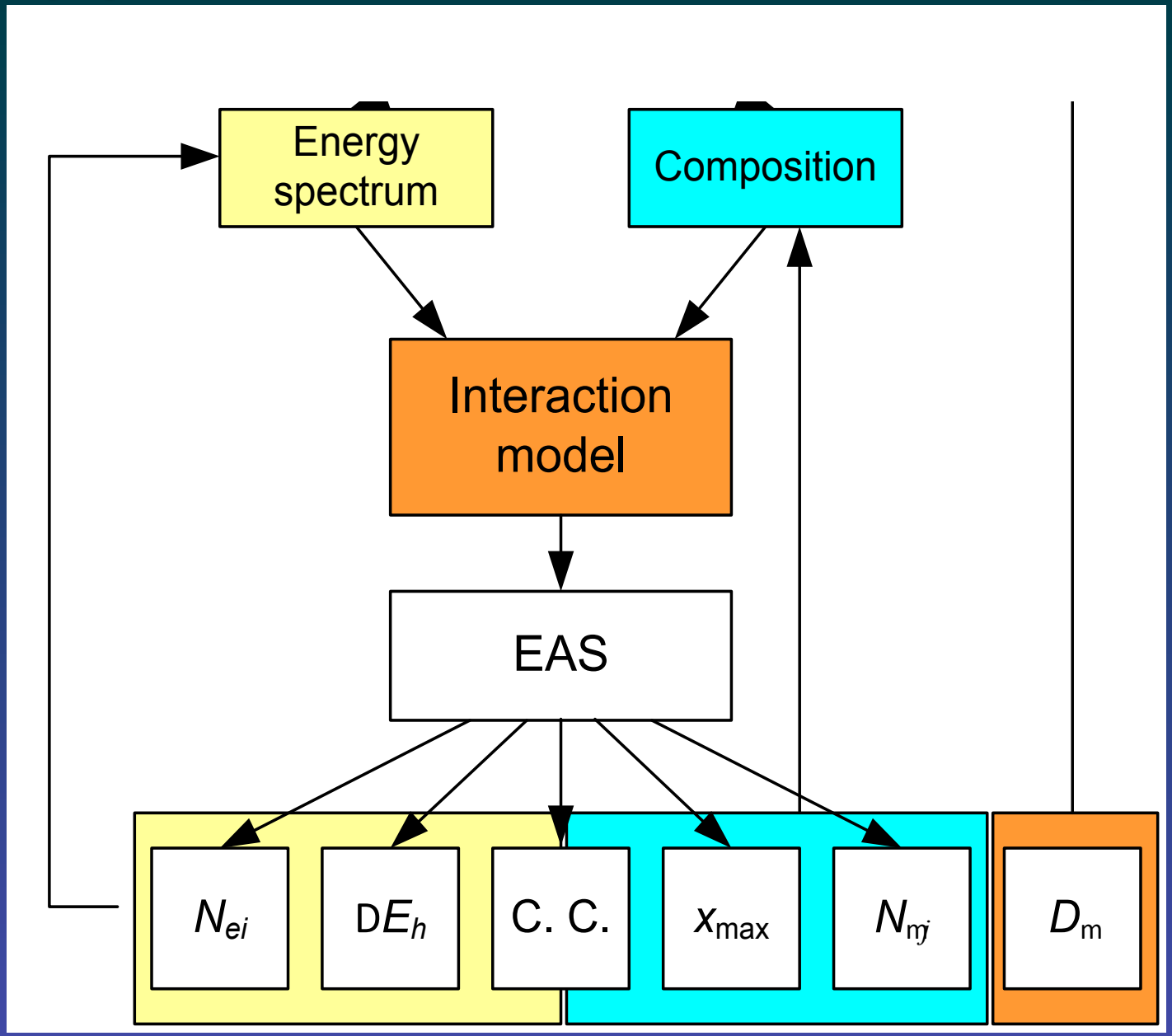

New (2) approach to EAS investigations

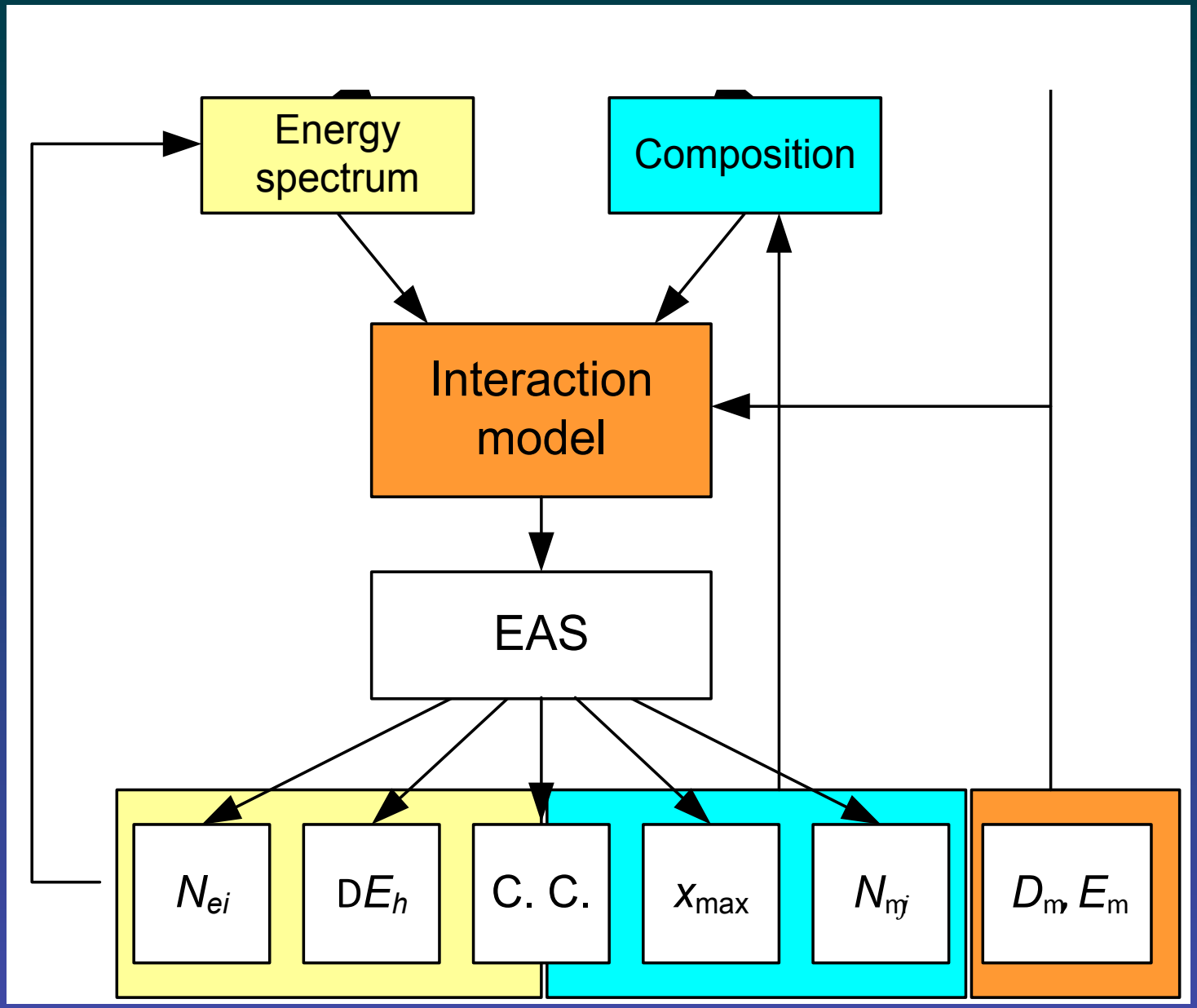

Response of NEVOD for muon bundles

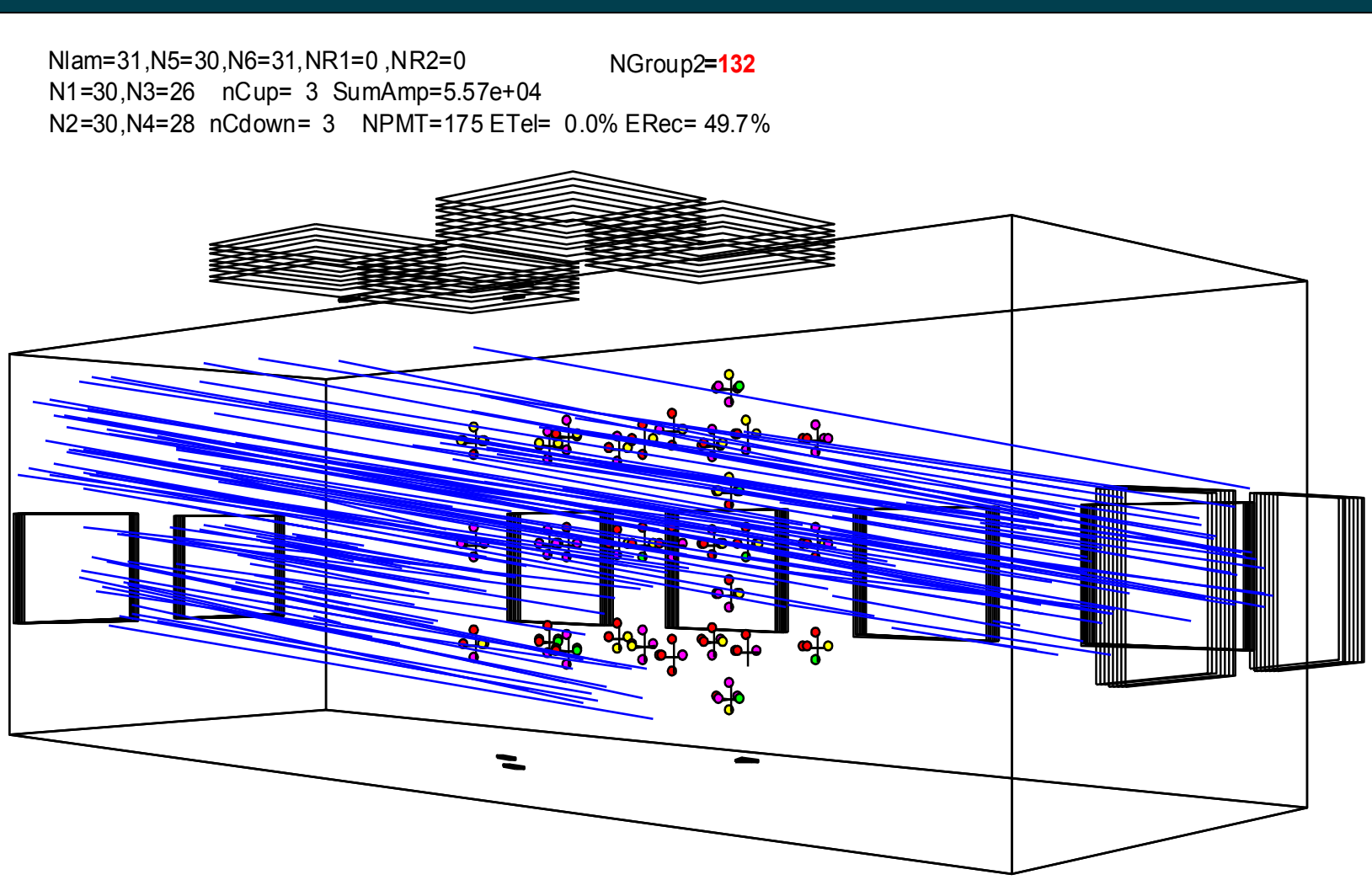

Energy deposit of muon bundles

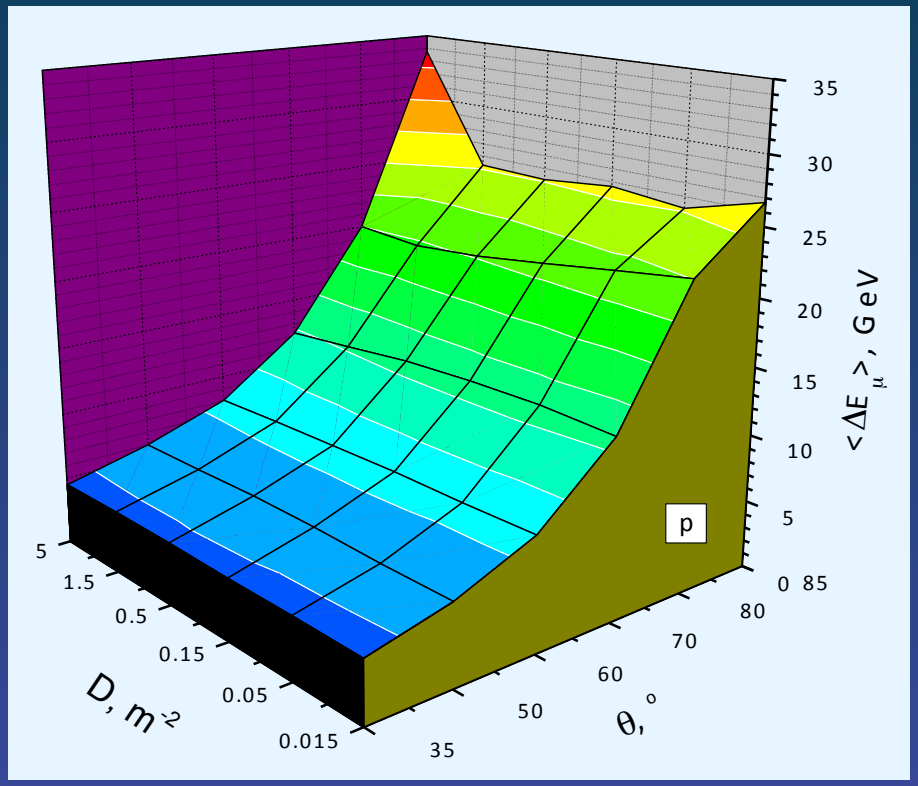

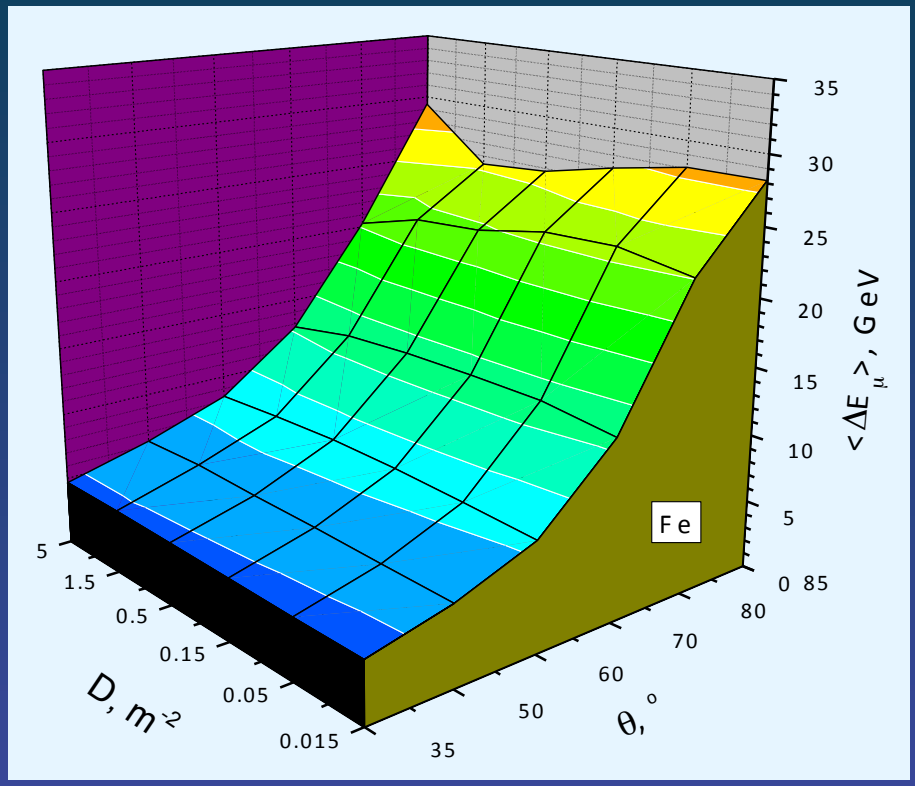

Expected results of muon energy deposit measurements

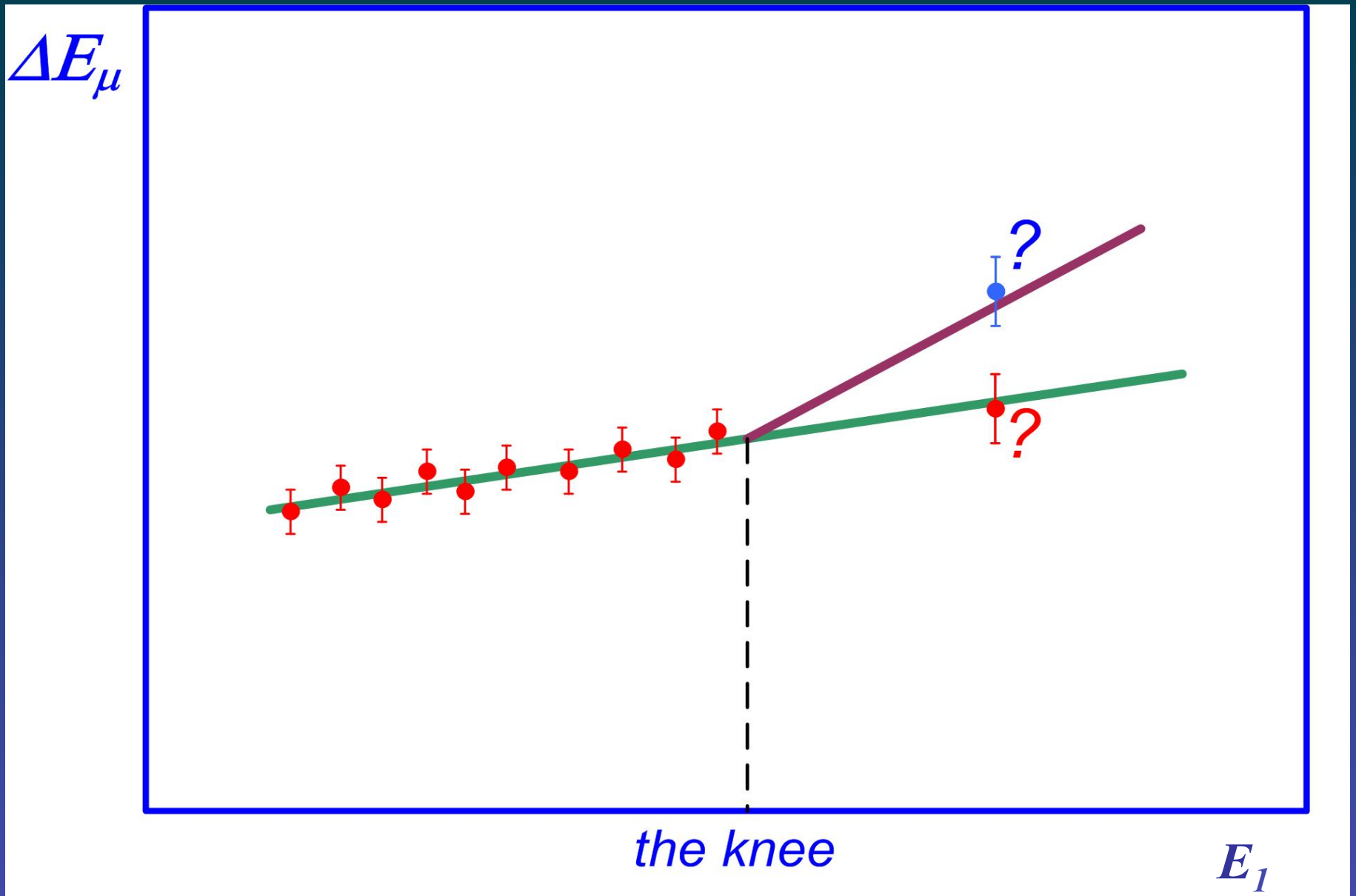

Proposal of NEVOD-DECOR-EAS experiment

Russia, Italy and (hope) Germany Collaboration

Proposal of EAS array around NEVOD-DECOR

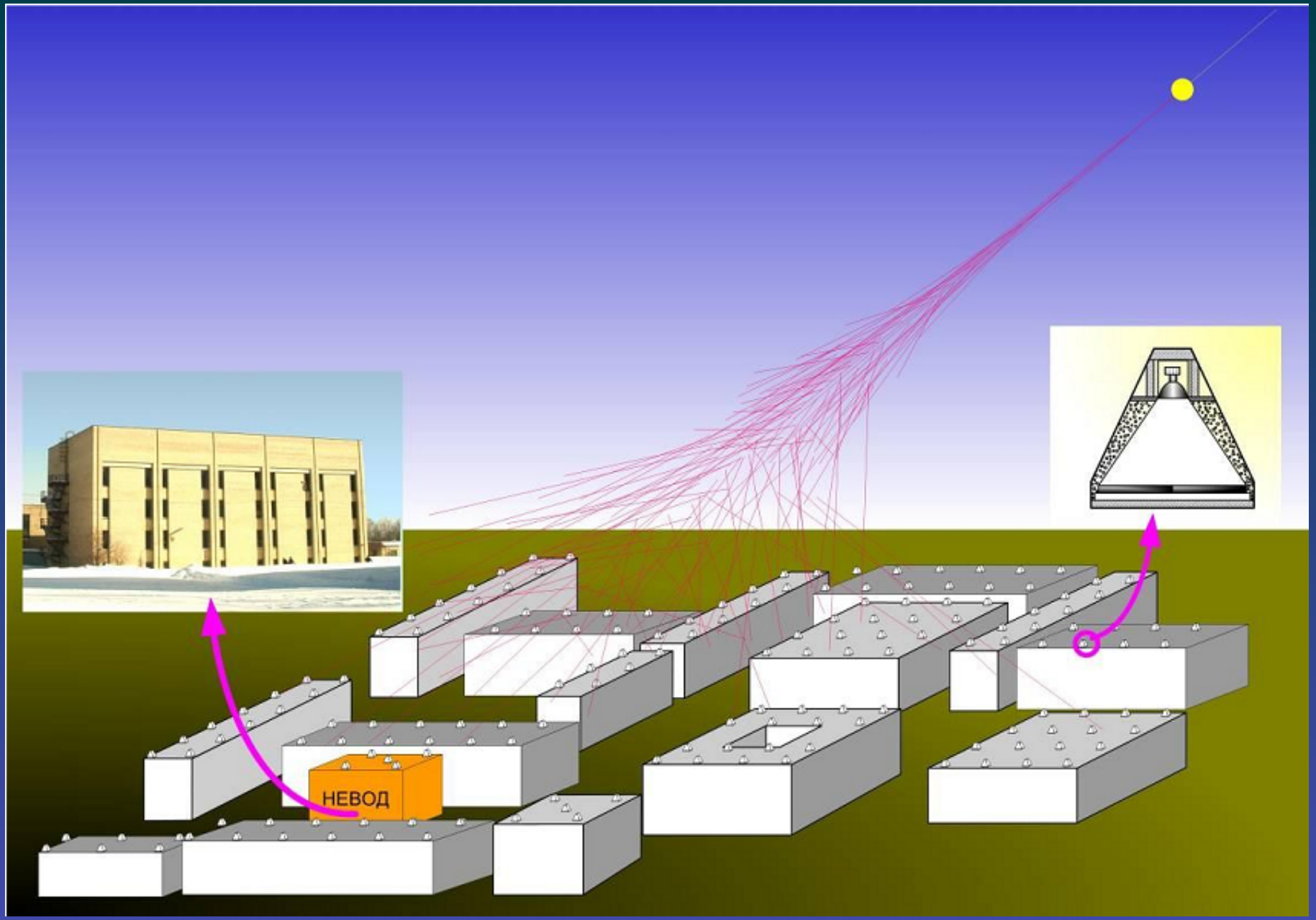

Cluster on the roof of one building

Results of EAS simulation (10^{16} eV)

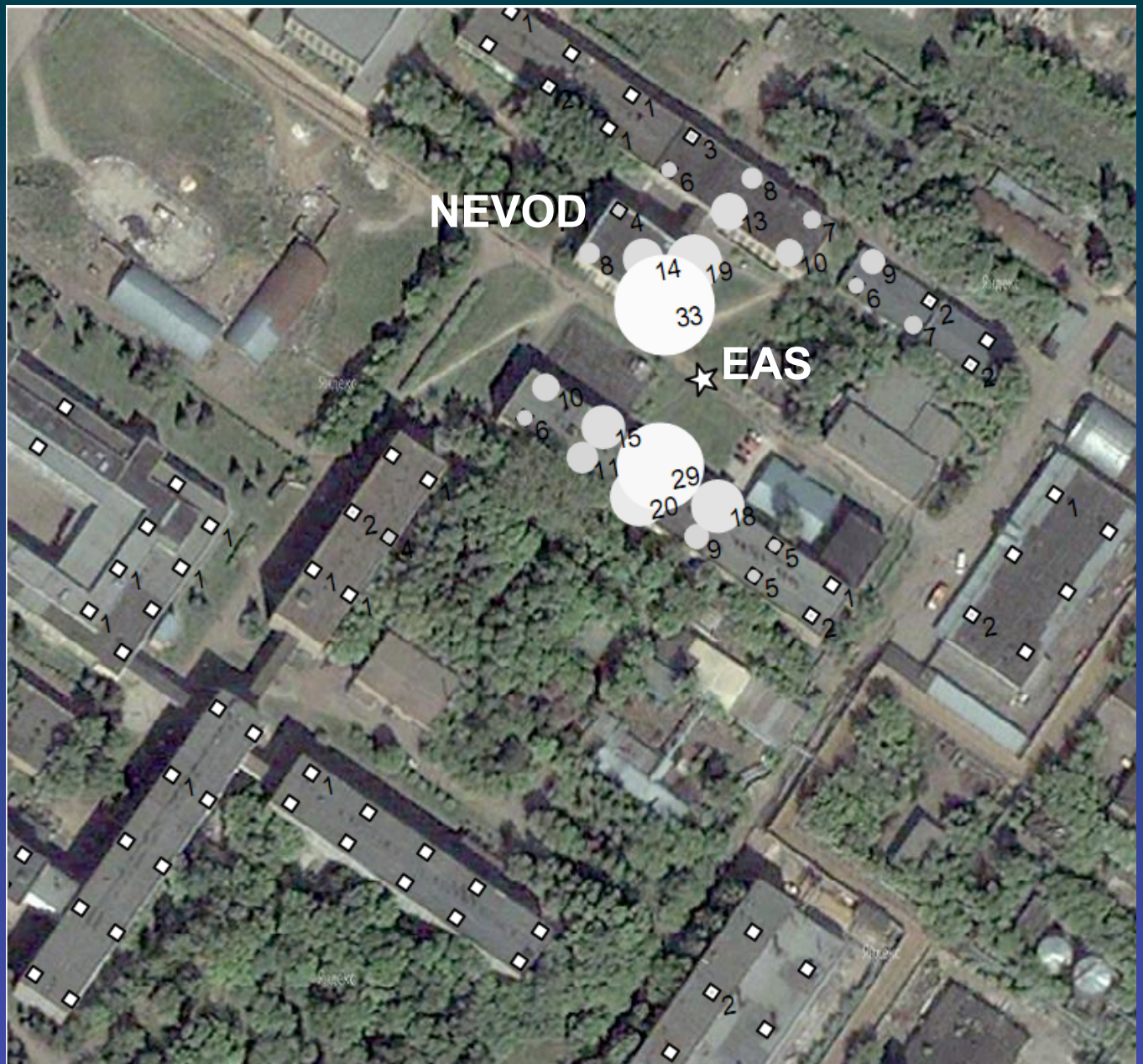

Conclusions-2

The addition of a traditional shower array to NEVOD-DECOR complex for EAS energy evaluation will open new possibilities in the investigations of interaction model.

If our experiment shows that the energy deposit of EAS muons above the knee changes its behavior, this will be a serious evidence of the interaction model change and inclusion of the new process of muon generation.

In this case all results of VHECR, UHECR, EHECR investigations will be reconsidered and new EAS arrays must include detectors for muon energy measurements (see, for example, poster 33 presented by P. Spillantini).

Thank you for your attention!