# Detection of single photons with hybrid ThickGEM-based counters

Stefano Levorato INFN Trieste and Trieste University
*On behalf of an Alessandria-Aveiro-Freiburg-Liberec-Prague-Torino-Trieste Collaboration*

## ♦ Abstract

Architectures based on multiple layers of THick-Gas Electron Multipliers (THGEM) represent a possible answer to the quest for novel gaseous counters with single photon detection capability able to overcome all the limitations of the present generation of gaseous photon detectors.
A systematic R&D programme has been performed to achieve a deep understanding of the THGEM characteristics and to optimise their parameters in view of the photon detection application. Recently a new hybrid approach has been considered: an architecture where the last multiplication stage is obtained by using a Micromegas stage.

## ♦ THGEM as Photon Detectors

After a dedicated program of R&D it is proven that it is possible to use the standard pcb technology to produce the elements of a detector for single photons: THGEMs are printed boards with an array of holes.

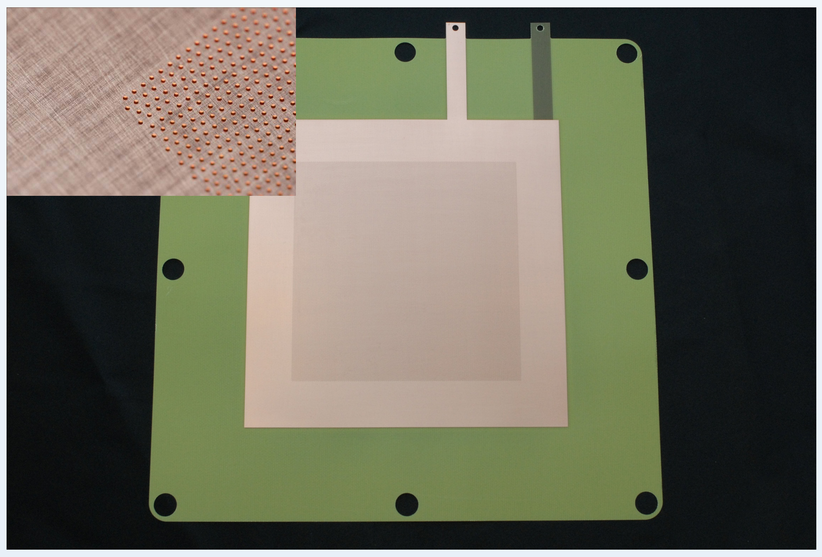

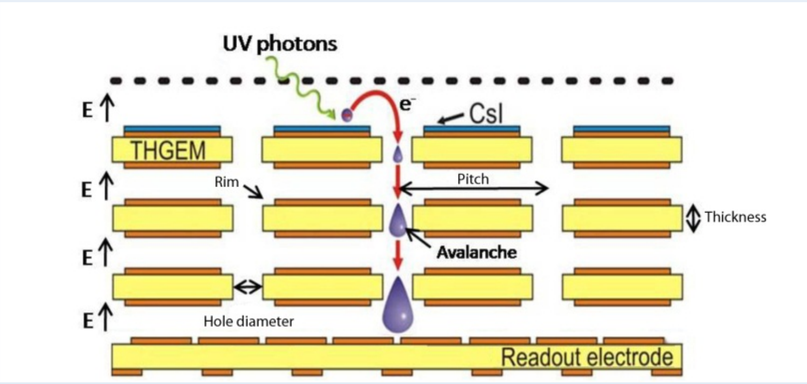


R&D studies performed on ***50*** different (hole size, rim dimension, pitch) samples of THGEM
- Single layer arrangement
- Multiple layer arrangement
- Using X-ray sources
- Using UV light sources
- With Cherenkov light at the test beams
- Analog read-out, single channel
- Digital read-out, 1 channel per anode pad
- Read-out of the current on the various electrodes

All the different THGEM samples have been characterised

## ♦ Coupling with MicroMegas

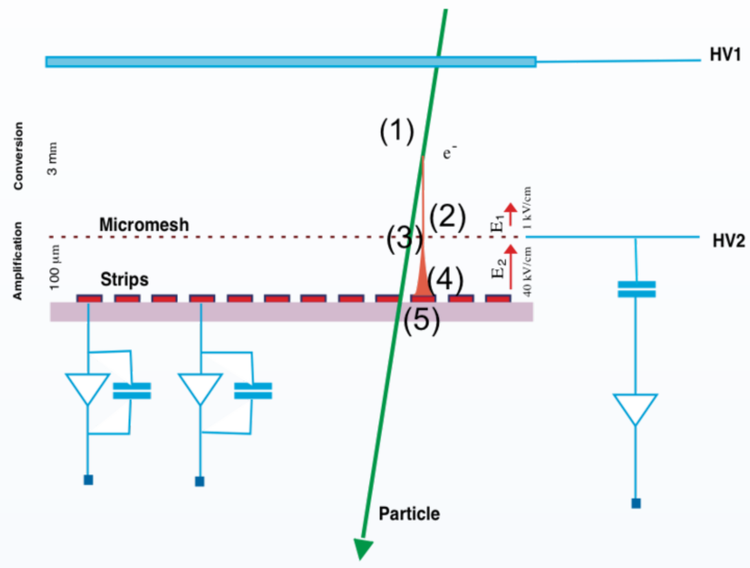


**1: Ionizing track, 2: Primary ionization, 3: Micromesh, 4 Charge Avalanche, 5 Readout Pad**

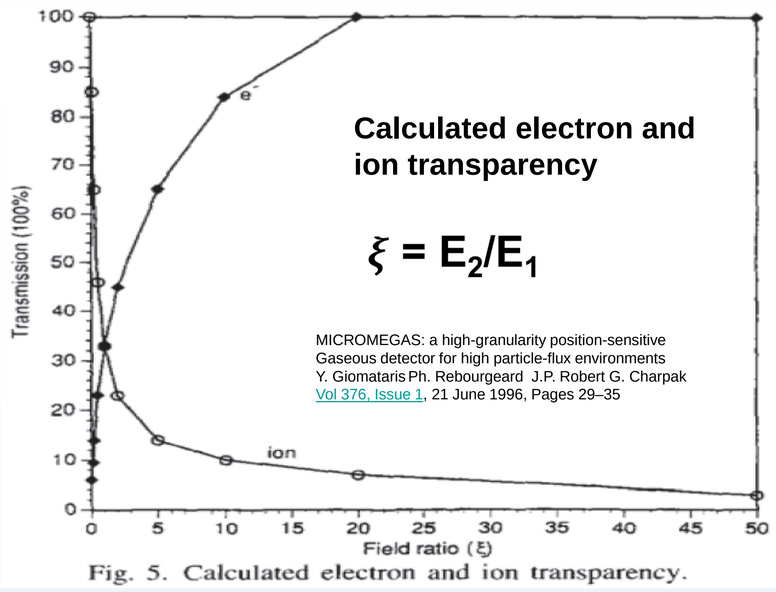


Fig. 5. Calculated electron and ion transparency.

Natural suppression of Ion Back Flow: Fraction of the ions flowing back from the multiplication volume.

## ♦ Measurement Setup

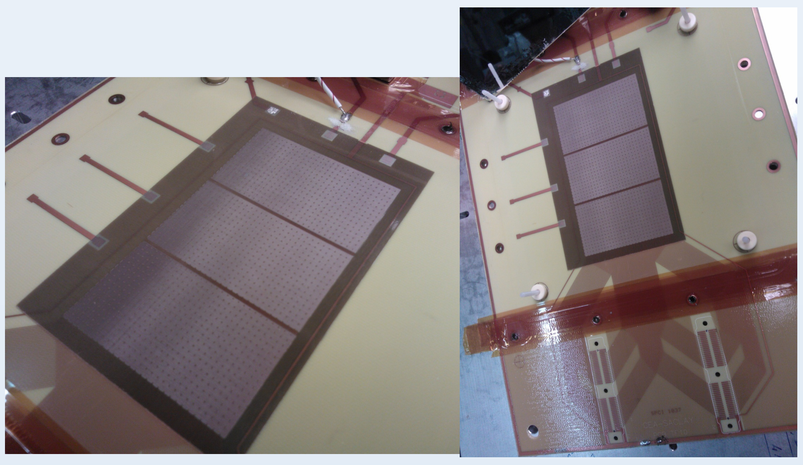

Bulk Micromegas: Courtesy of CEA Saclay
128 μm mesh anode distance,
60mm x 100 mm active surface, strip anode

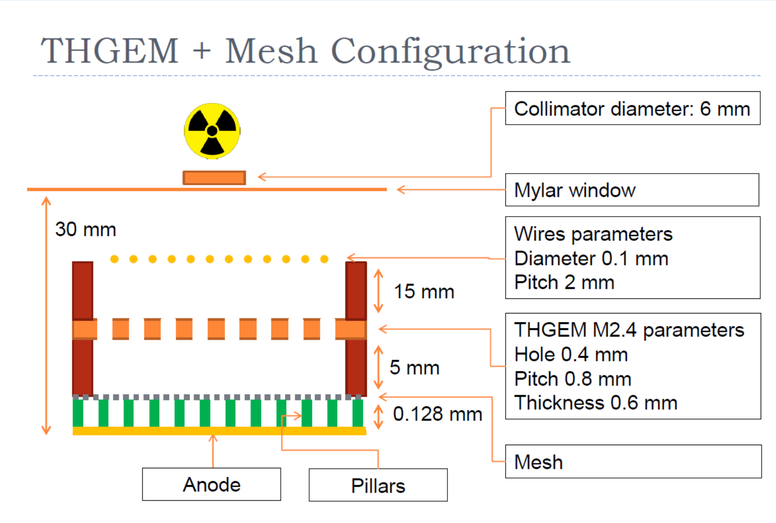


GAS : $Ar/CO_2$ 70/30 premixed
Source $^{55}Fe$ or UV LED (255 nm) w or w/o THGEM
Pre-Amplifier stage Cremat CR110 (spark protection circuit installed)+Ortec Amplifier + MCA

## ♦ Results

Mesh only

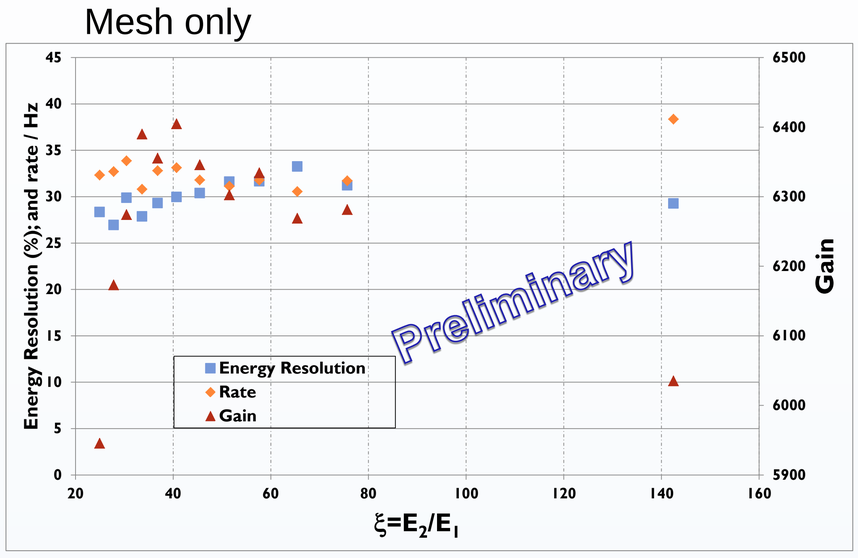


Mesh + THGEM

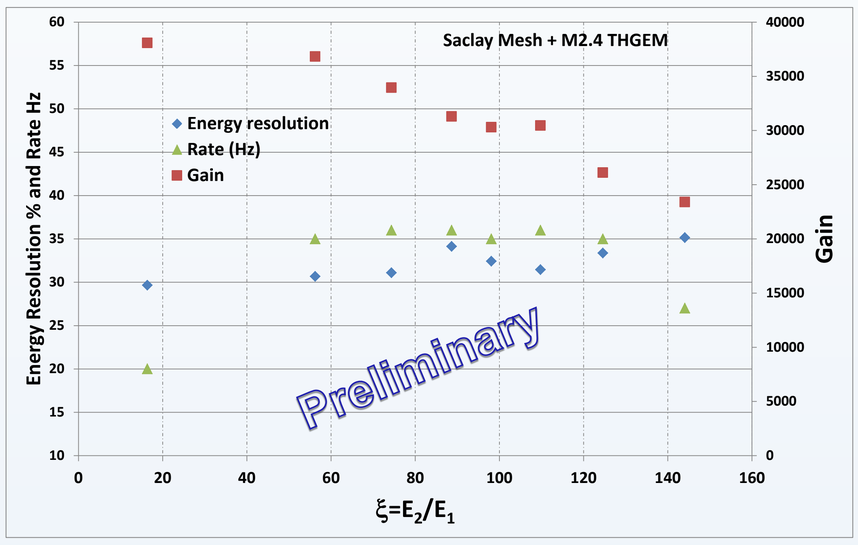


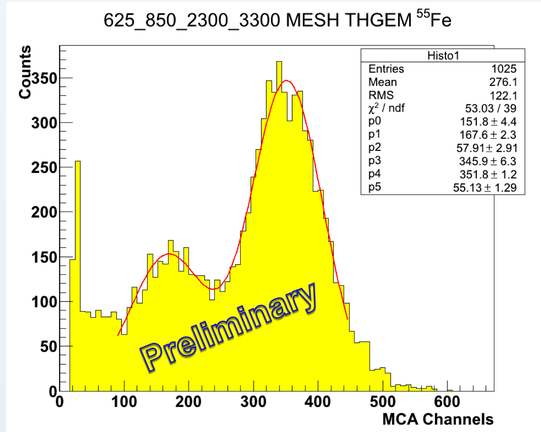


$V_{mesh}$ = 625 V
$E_{trans}$ = 450 V/cm
$\Delta V_{THGEM}$ = 1450 V
$E_{drift}$ = 666 V/cm
ER = 37%
Gain = 100 k

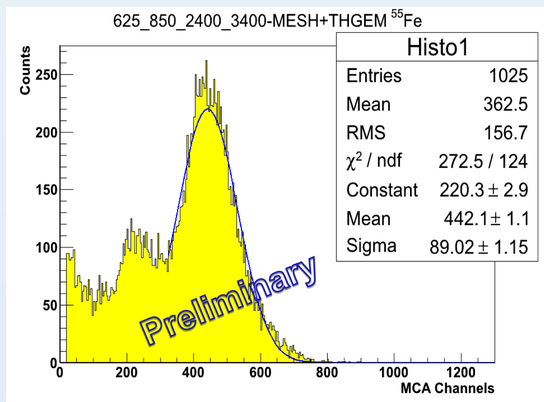


$V_{mesh}$ = 625 V
$E_{trans}$ = 450 V/cm
$\Delta V$ = 1550 V
$E_{drift}$ = 666 V/cm
ER = 47%
Gain = 250 k

Using UV light and a different mesh mounting setup, PicoAmmeters connected to biasing layers

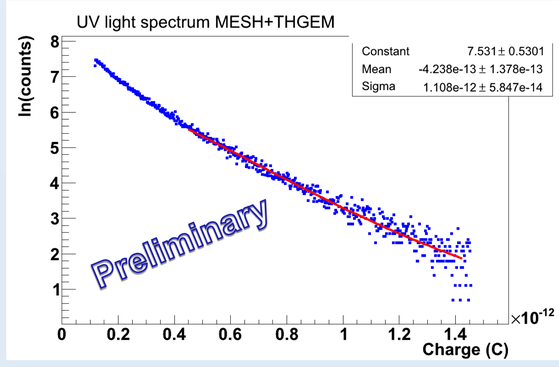


$E_{mesh}$ ~ 30 kV/cm
$E_{trans}$ = 1.2 kV/cm
$\Delta V$ = 1575 V
$E_{drift}$ = 0 V/cm
Gain ~$10^6$
IBF ~ 4%

## ♦ Conclusions

Preliminary results with THGEM coupled with Micromegas are very promising. No performance degradation from their coupling, high gain achievable using UV light source, with low IBF, and good detector stability. Many open points, and optimization still to be performed. *Fresh results*, test ongoing.