ILC（International Linear Collider）Asian Region Electrical Design

H. Hashiguchi, Nikken Sekkei, Co. Ltd.,
A. Enomoto, KEK

ILC Mechanical & Electrical Review and CFS Baseline Technical Review
2012.3.21-23, CERN

Contents

① Electrical Power System
② Electrical Grounding System
③ Communication Network System

Electrical Power System

Design Concepts

- Reliability
- Efficiency
- Cost

Electrical Power System

Site Specific Issues

- **HLRF layout: RDR-like**
- **Local HV lines: 150 – 500 kV**
- **Site MV: 66 kV**
- **Area MV: 6.6 kV**

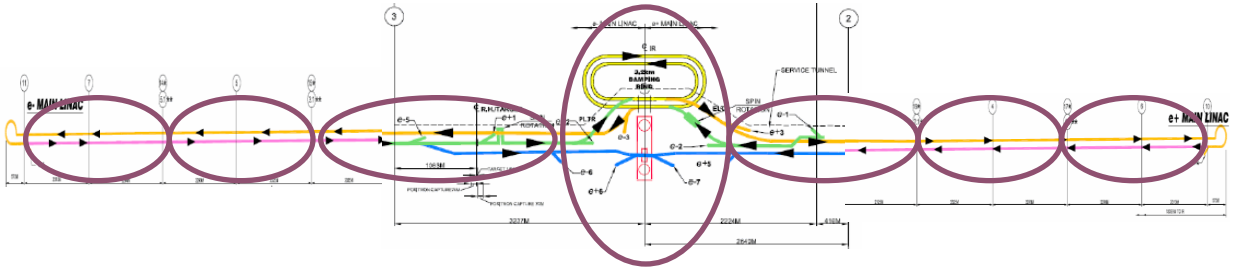

Strawman Baseline for Technical Design Phase2 (2010-2012)

SB2009

Re-baselining

Electrical Power System
Load Requirements (Full Power Op., ref. Sep. 2011)

table：overall electrical load summary

Requirement（for 500GeV）

	Power(MW)	Power Facter	Power(MVA)	AH1	AH2	AH3	AH4	EH				AH5	AH6	AH7	AH8
Source e−	4.30	0.9	4.78									4.78			
Source e+	15.04	0.9	16.71				16.71								
DR	17.42	0.9	19.36					16.45	2.90						
RTML	11.88	0.9	13.20		5.94		0.66					0.66		5.94	
ML	97.24	0.9	108.04		22.20	22.20	9.99					9.25	22.20	22.20	
BDS	15.25	0.9	16.94				8.47					8.47			
Dump	3.95	0.9	4.39							4.39					
IR(DH)	0.46	0.9	0.51							0.51					
Cryogenics	49.63	0.9	55.14		7.37	7.37	7.96	2.52		1.73		7.96	7.37	7.37	
TOTAL	215.17		239.08		35.51	29.57	43.80	18.97	2.90	6.63	0.00	31.12	29.57	35.51	

Electrical Power System

Load Requirements (w. Power Factor)

table : overall electrical load summary

Power Factor Assumption

	Power(MW)	Power Facter	Power(MVA)	AH1	AH2	AH3	AH4	EH				AH5	AH6	AH7	AH8
Source e−	4.30	0.9	4.78									4.78			
Source e+	15.04	0.9	16.71				16.71								
DR	17.42	0.9	19.36					16.45	2.90						
RTML	11.88	0.9	13.20		5.94		0.66					0.66		5.94	
ML	97.24	0.9	108.04		22.20	22.20	9.99					9.25	22.20	22.20	
BDS	15.25	0.9	16.94				8.47					8.47			
Dump	3.95	0.9	4.39							4.39					
IR(DH)	0.46	0.9	0.51							0.51					
Cryogenics	49.63	0.9	55.14		7.37	7.37	7.96	2.52		1.73		7.96	7.37	7.37	
TOTAL	215.17		239.08		35.51	29.57	43.80	18.97	2.90	6.63	0.00	31.12	29.57	35.51	

Electrical Power System

Load Requirements (Capacity)

table : overall electrical load summary

Electric Power Capacity

	Power(MW)	Power Facter	Power(MVA)	AH1	AH2	AH3	AH4	EH				AH5	AH6	AH7	AH8
Source e-	4.30	0.9	4.78									4.78			
Source e+	15.04	0.9	16.71				16.71								
DR	17.42	0.9	19.36					16.45	2.90						
RTML	11.88	0.9	13.20		5.94		0.66					0.66		5.94	
ML	97.24	0.9	108.04		22.20	22.20	9.99					9.25	22.20	22.20	
BDS	15.25	0.9	16.94				8.47					8.47			
Dump	3.95	0.9	4.39							4.39					
IR(DH)	0.46	0.9	0.51							0.51					
Cryogenics	49.63	0.9	55.14		7.37	7.37	7.96	2.52		1.73		7.96	7.37	7.37	
TOTAL	215.17		239.08		35.51	29.57	43.80	18.97	2.90	6.63	0.00	31.12	29.57	35.51	

Electrical Power System
Load Requirements (Capacity)

table：overall electrical load summary

	Power(MW)	Power Facter	Power(MVA)	AH1	AH2	AH3	AH4	EH				AH5	AH6	AH7	AH8
Source e−	4.30	0.9	4.78									4.78			
Source e+	15.04	0.9	16.71				16.71								
DR	17.42	0.9	19.36					16.45	2.90						
RTML	11.88	0.9	13.20		5.94		0.66					0.66		5.94	
ML	97.24	0.9	108.04		22.20	22.20	9.99					9.25	22.20	22.20	
BDS	15.25	0.9	16.94				8.47					8.47			
Dump	3.95	0.9	4.39							4.39					
IR(DH)	0.46	0.9	0.51							0.51					
Cryogenics	49.63	0.9	55.14		7.37	7.37	7.96	2.52		1.73		7.96	7.37	7.37	
TOTAL	215.17		239.08		35.51	29.57	43.80	18.97	2.90	6.63	0.00	31.12	29.57	35.51	

+about 60MVA margin

Total 300MVA including margin

Electrical Power System
System Redundancy (Surface-ground Main Substation)

275kV Receiving Equipment is Available For 1TeV system (Up to 500MVA)

Transformer Space

For 1TeV system

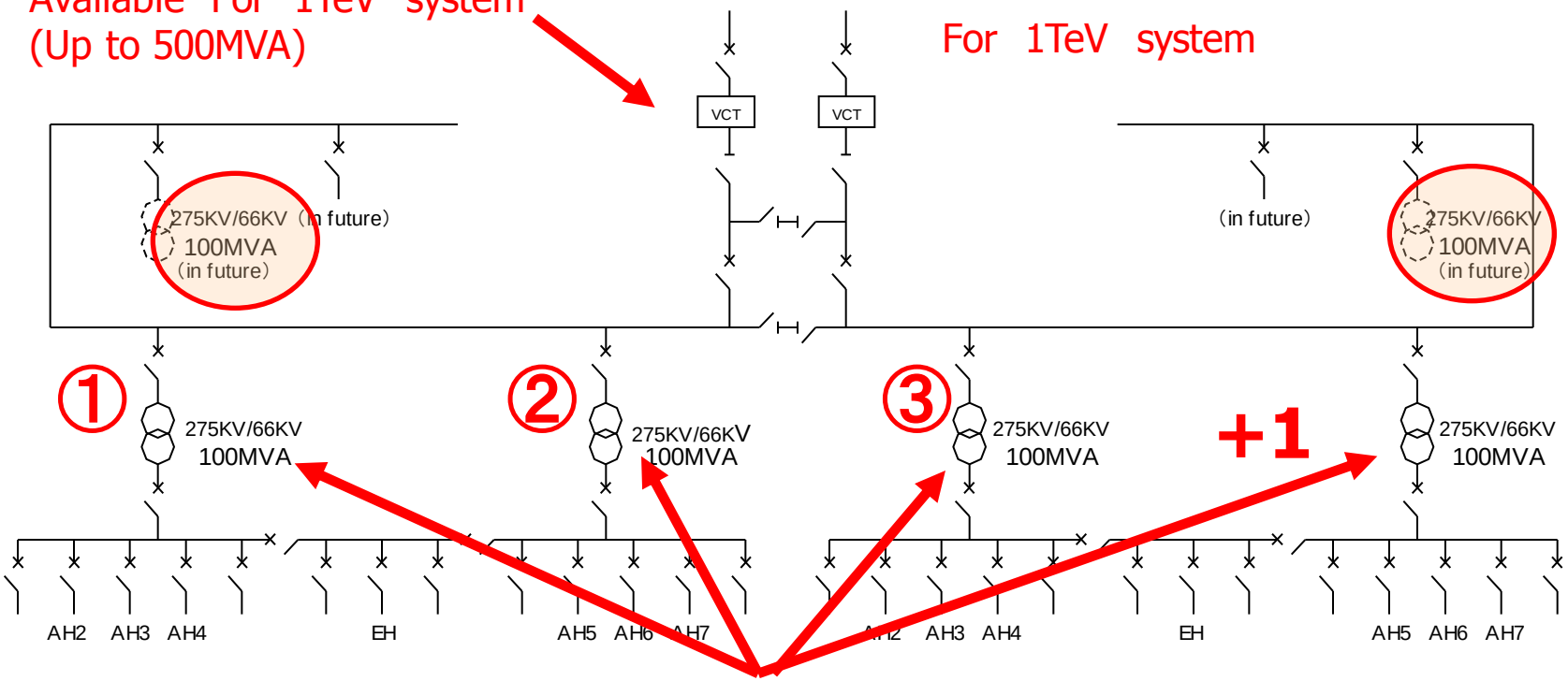

N(3)+1 transformer component

for 500GeV system

Electrical Power System
System Redundancy (Main Substation, cnt.)

2 Components of

Distribution panel

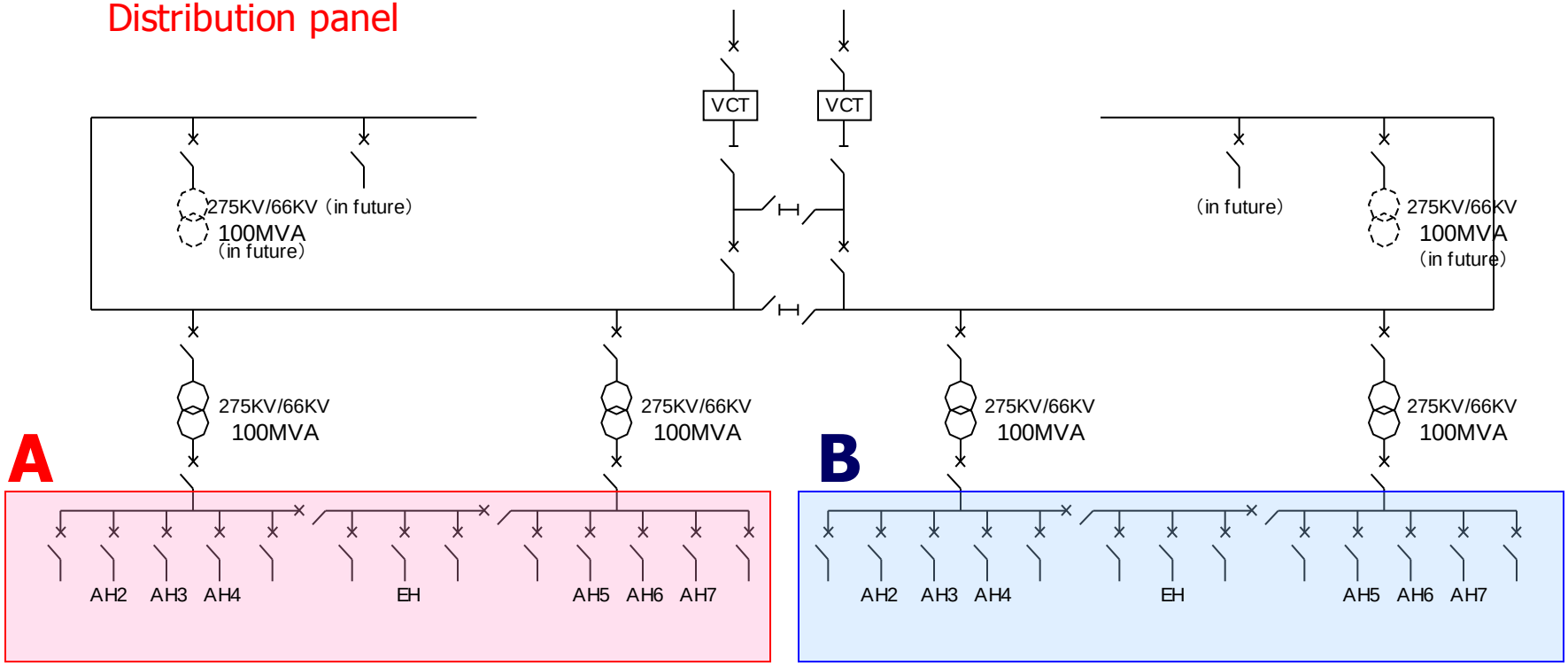

Electrical Power System
System Redundancy (Site Power Distribution)

66KV power distribution Main line diagram

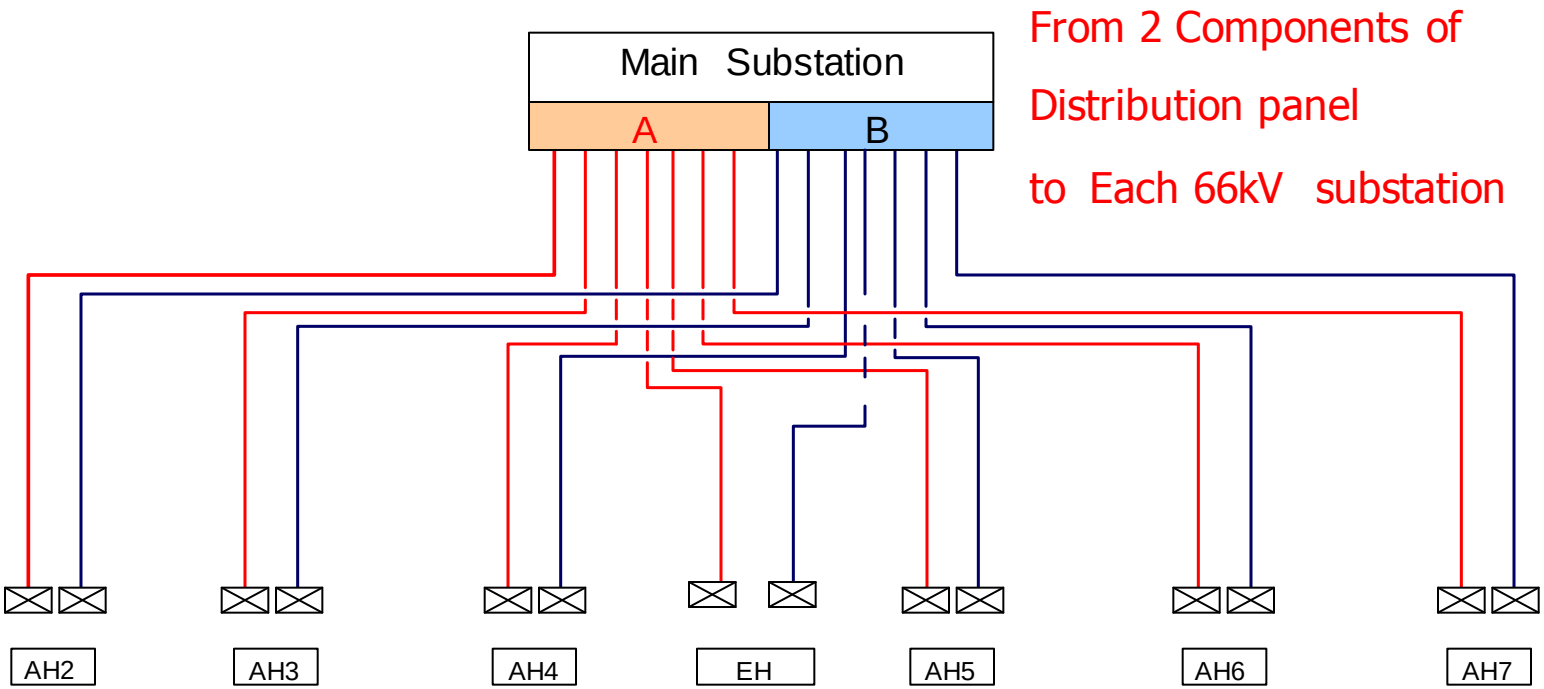

Electrical Power System
System Redundancy (Area 66/6.6kV Transformers)

table：overall electrical load summary

	Power(MW)	Power Facter	Power(MVA)	AH1	AH2	AH3	AH4	EH				AH5	AH6	AH7	AH8
Source e−	4.30	0.9	4.78									4.78			
Source e+	15.04	0.9	16.71				16.71								
DR	17.42	0.9	19.36					16.45	2.90						
RTML	11.88	0.9	13.20		5.94		0.66					0.66		5.94	
ML	97.24	0.9	108.04		22.20	22.20	9.99					9.25	22.20	22.20	
BDS	15.25	0.9	16.94				8.47					8.47			
Dump	3.95	0.9	4.39							4.39					
IR(DH)	0.46	0.9	0.51							0.51					
Cryogenics	49.63	0.9	55.14		7.37	7.37	7.96	2.52		1.73		7.96	7.37	7.37	
TOTAL	215.17		239.08		35.51	29.57	43.80	18.97	2.90	6.63	0.00	31.12	29.57	35.51	
66kV/6.6kV transformer					30MVA 30MVA	30MVA 30MVA	30MVA 30MVA	30MVA,30MVA (30MVA)				30MVA 30MVA	30MVA 30MVA	30MVA 30MVA	

2 transformers(30MVA) at Each Hall

Electrical Power System
Spare 66/6.6kV Transformer

table：overall electrical load summary

	Power(MW)	Power Facter	Power(MVA)	AH1	AH2	AH3	AH4	EH				AH5	AH6	AH7	AH8
Source e−	4.30	0.9	4.78									4.78			
Source e+	15.04	0.9	16.71				16.71								
DR	17.42	0.9	19.36					16.45	2.90						
RTML	11.88	0.9	13.20		5.94		0.66					0.66		5.94	
ML	97.24	0.9	108.04		22.20	22.20	9.99					9.25	22.20	22.20	
BDS	15.25	0.9	16.94				8.47					8.47			
Dump	3.95	0.9	4.39							4.39					
IR(DH)	0.46	0.9	0.51							0.51					
Cryogenics	49.63	0.9	55.14		7.37	7.37	7.96	2.52		1.73		7.96	7.37	7.37	
TOTAL	215.17		239.08		35.51	29.57	43.80	18.97	2.90	6.63	0.00	31.12	29.57	35.51	

66kV/6.6kV transformer		30MVA 30MVA	30MVA 30MVA	30MVA 30MVA	30MVA,30MVA (30MVA)		30MVA 30MVA	30MVA 30MVA	30MVA 30MVA	

Keep one Stand-by Transformer(30MVA) at center warehouse on the ground

Electrical Power System
66/6.6kV Substations (@7 underground halls)

Each substatiosn installed

in access halls

and an experimental hall

One line diagram of 66KV substation with generator

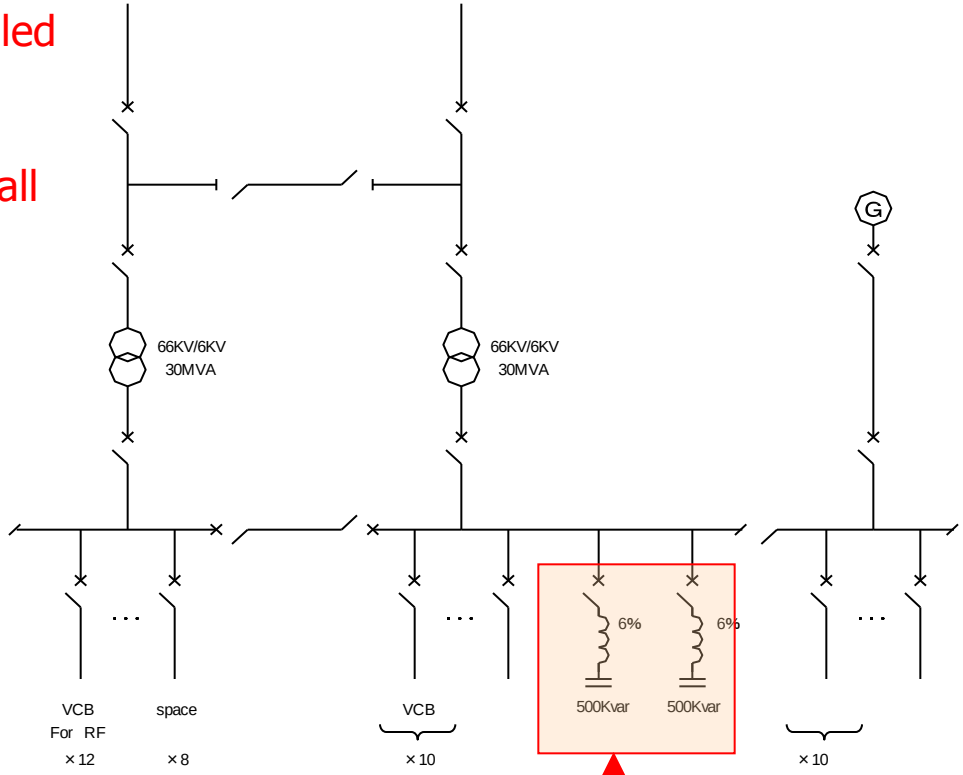

Capacitor for conventional load power factor improvement

Electrical Power System
66/6.6kV Substations (@7 underground halls, cnt.)

One line diagram of 66KV substation with generator

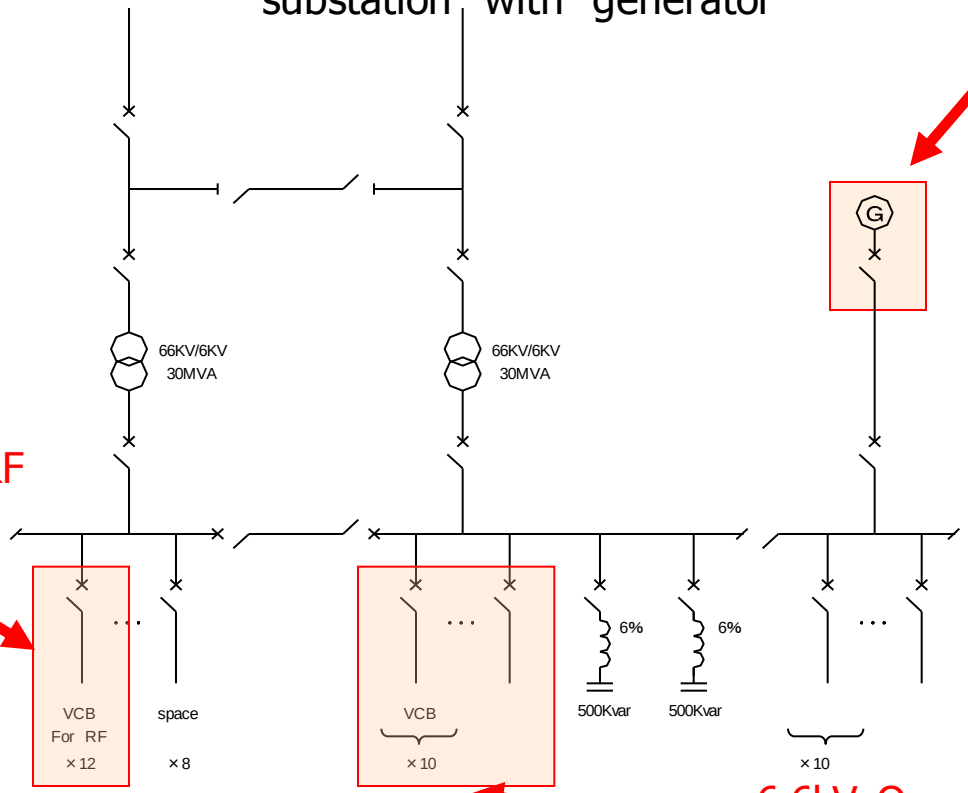

Emergency Generator

On the ground

Emergency load assumption

Drainage pump, smoke extraction fan, and so forth

Helium gas extraction system also prefers to add emergency load

6.6kV One main line branches about 10 RF

6.6kV One main line branches about 4 local substation

Electrical Power System
66/6.6kV Substations (@7 underground halls, cnt.)

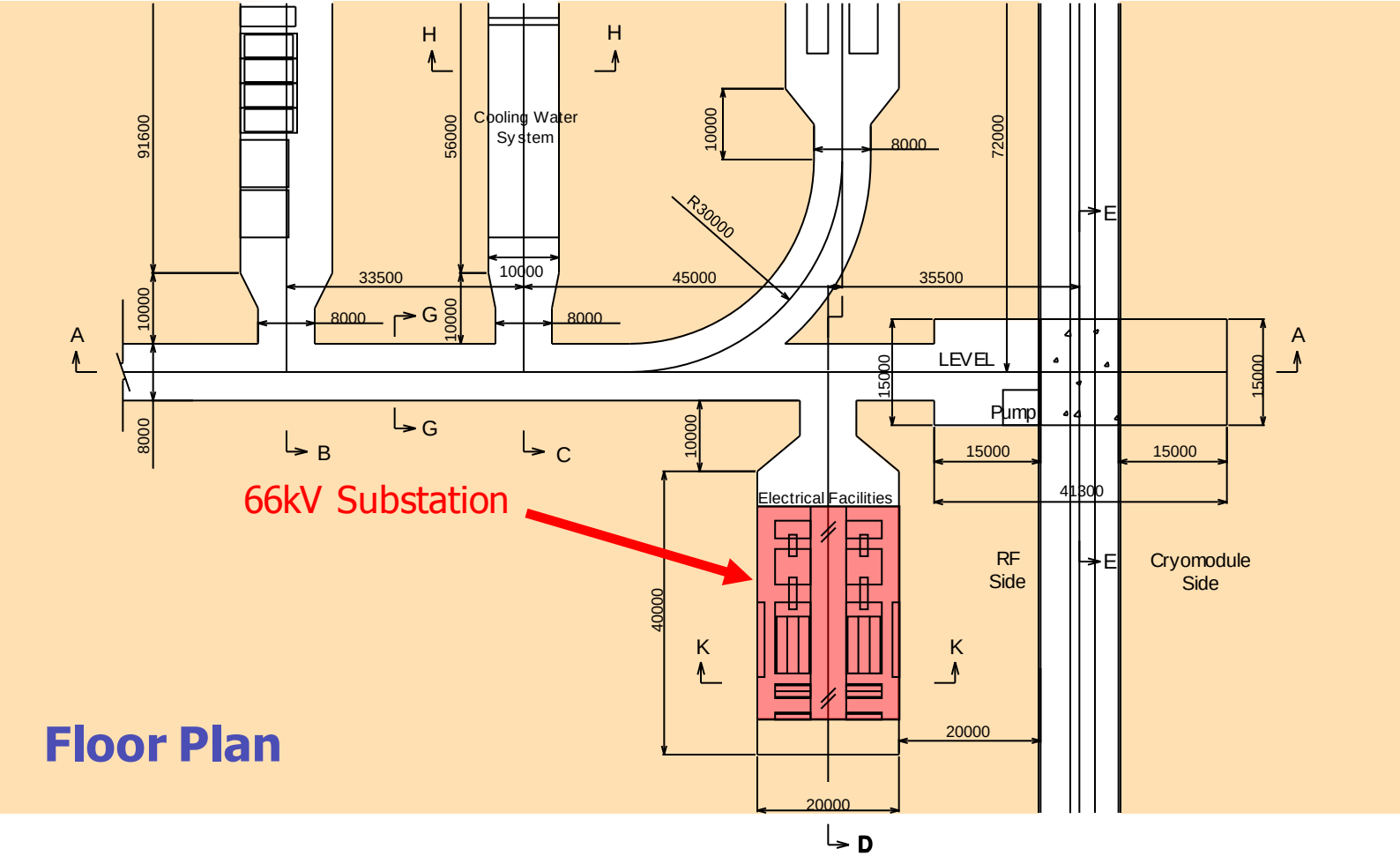

Floor Plan

Electrical Power System
66/6.6kV Substations (@7 underground halls, cnt.)

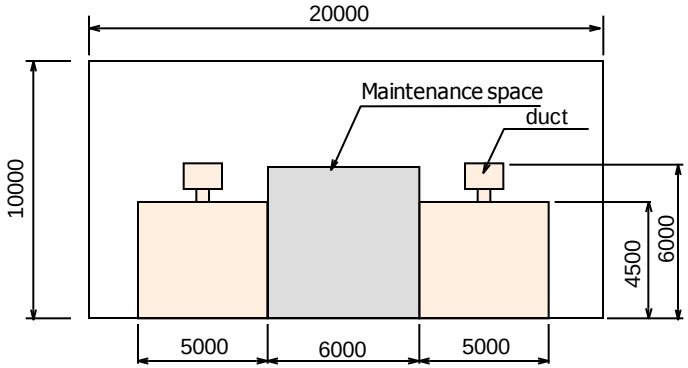

Ⓐ – Ⓐ' section

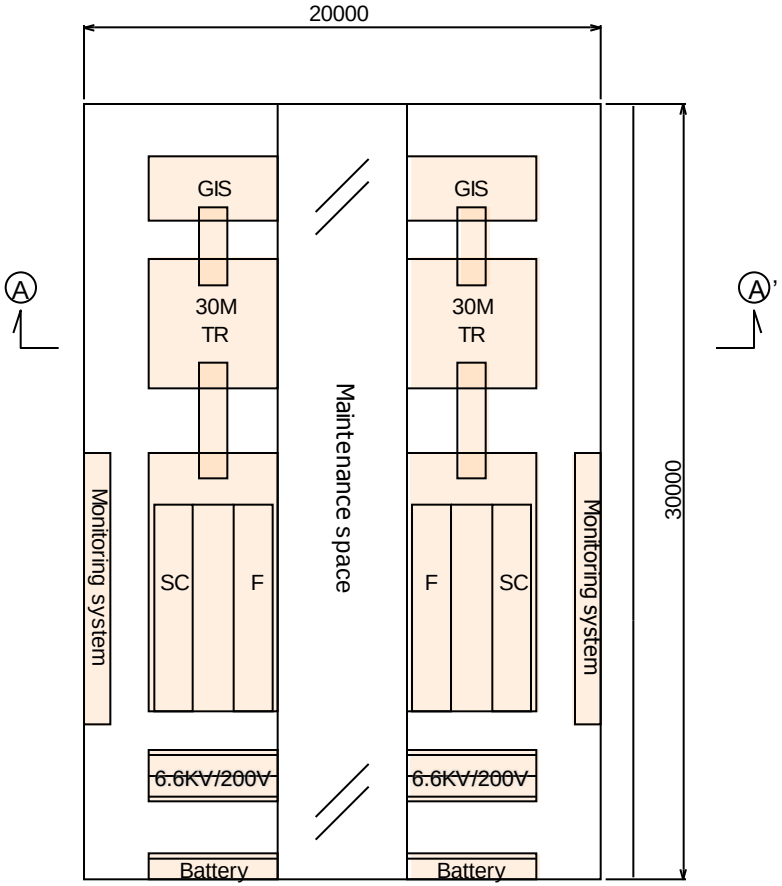

Floor layout plan

Electrical Power System
6.6kV Local Substations (@Service tunnel)

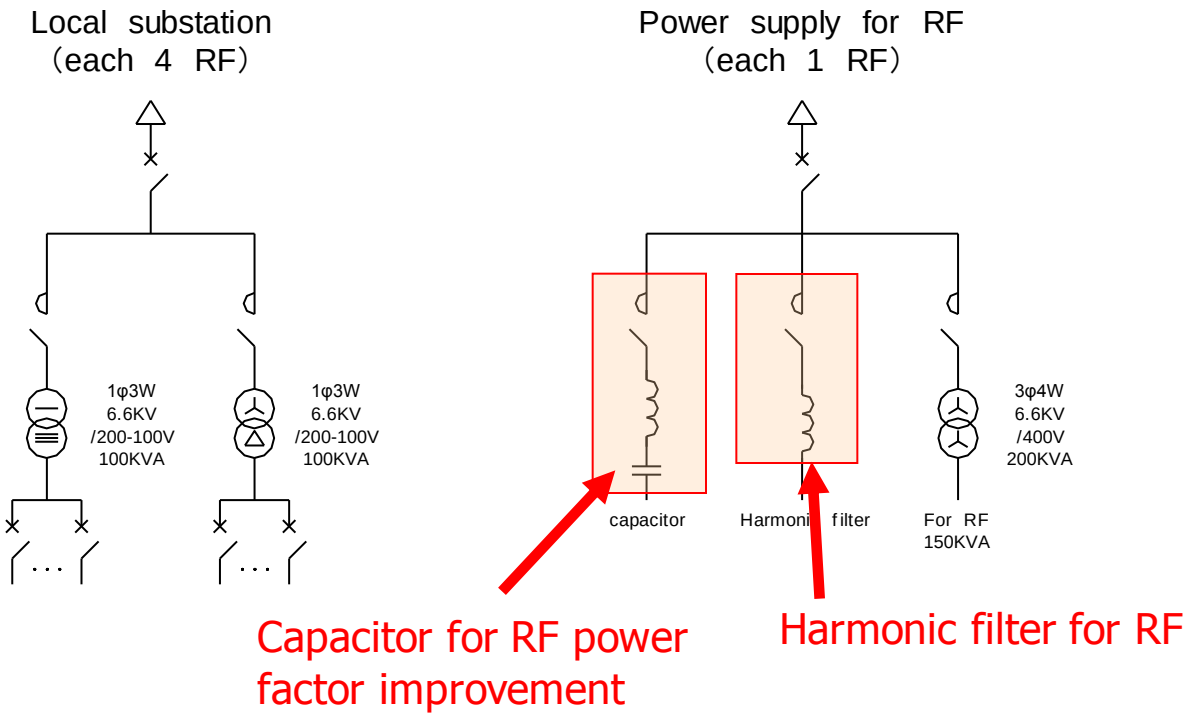

Electrical Power System
ML Tunnel Section

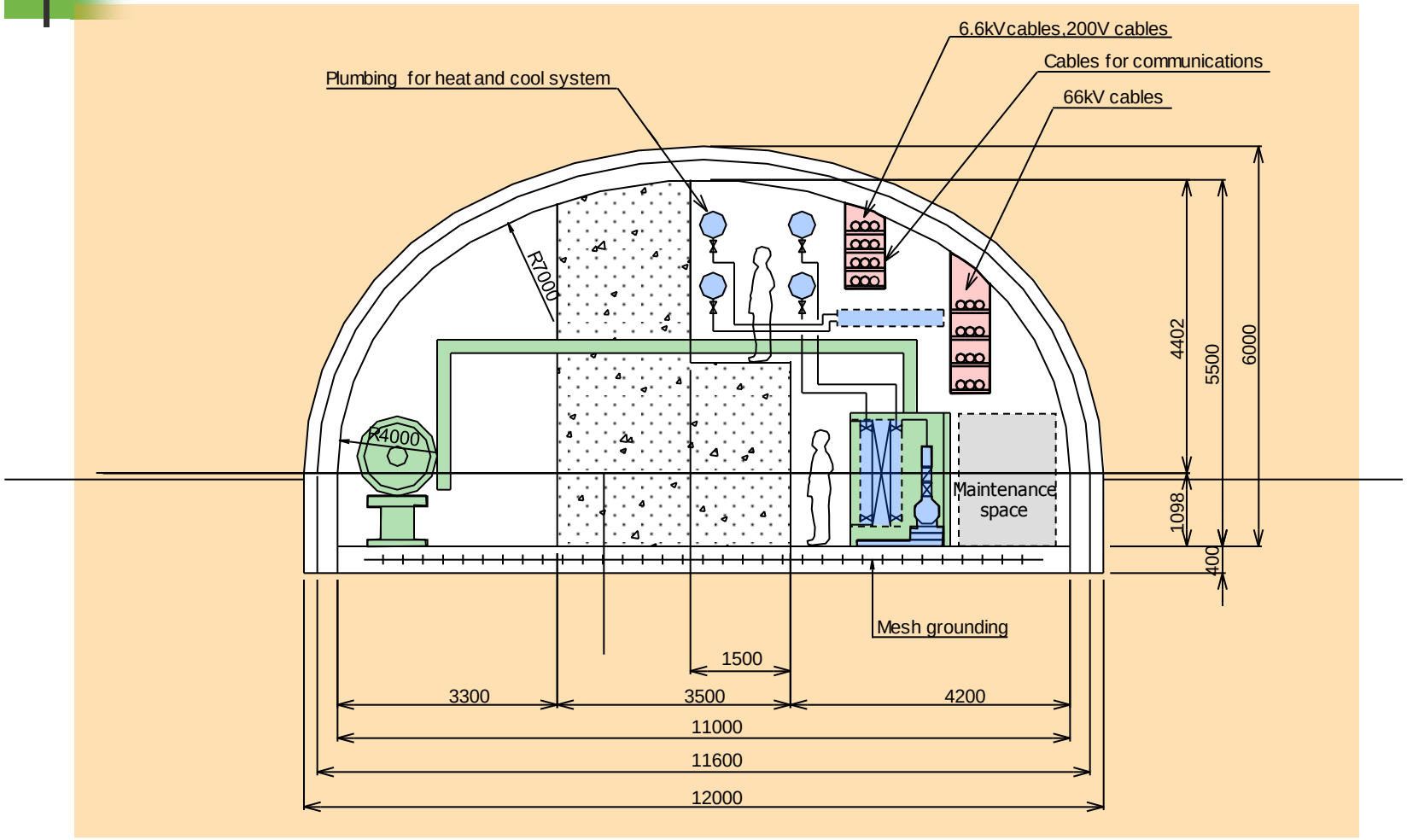

Electrical Power System
ML Tunnel Floor

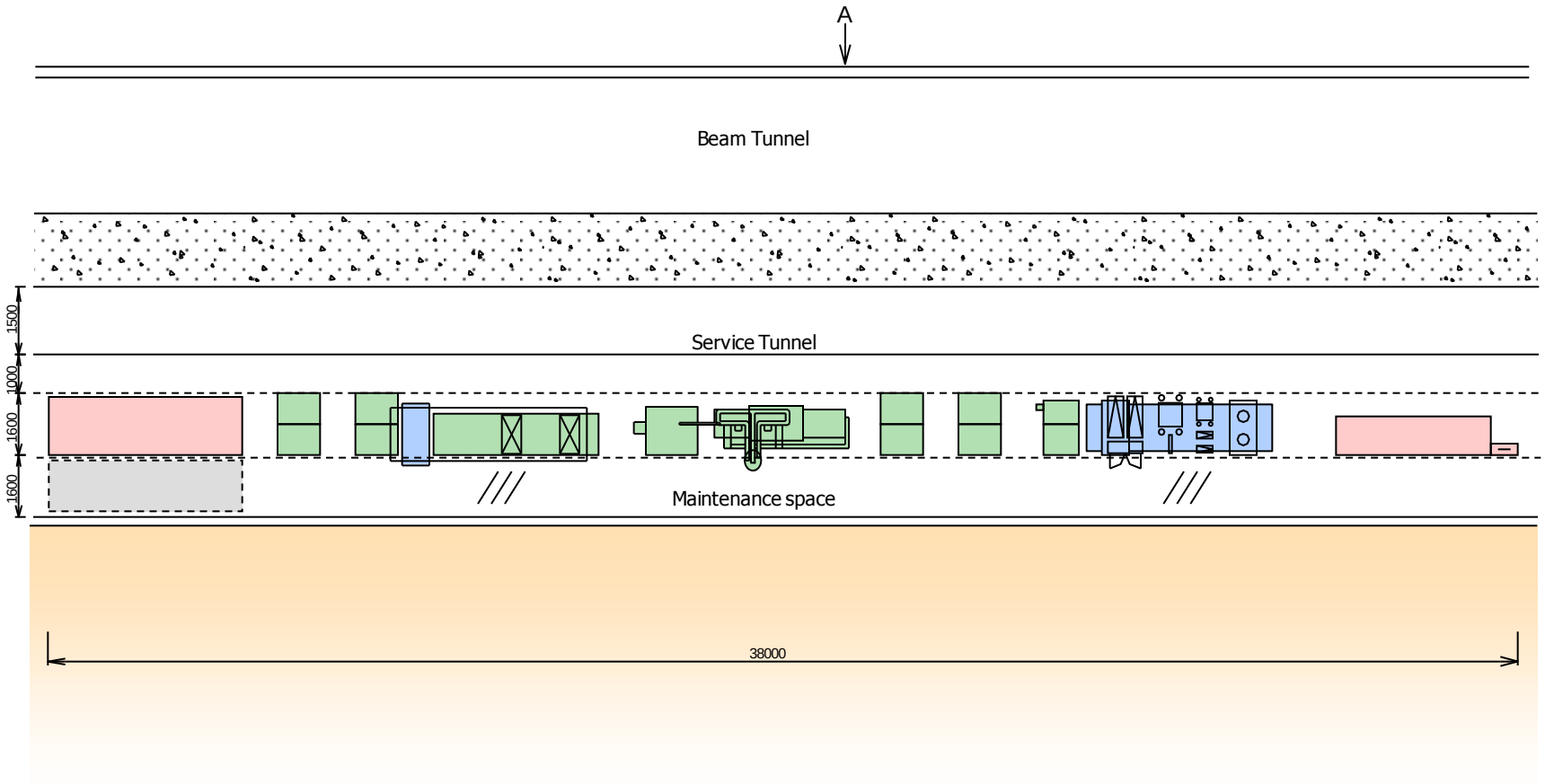

Electrical Power System
ML Tunnel Floor (Detail 1)

Section

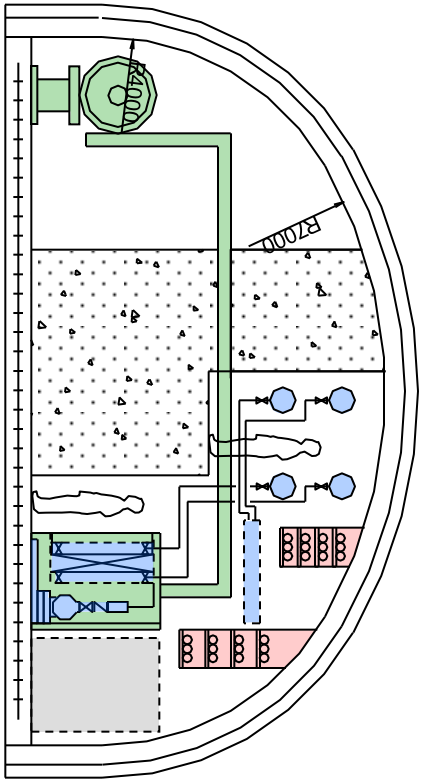

Layout

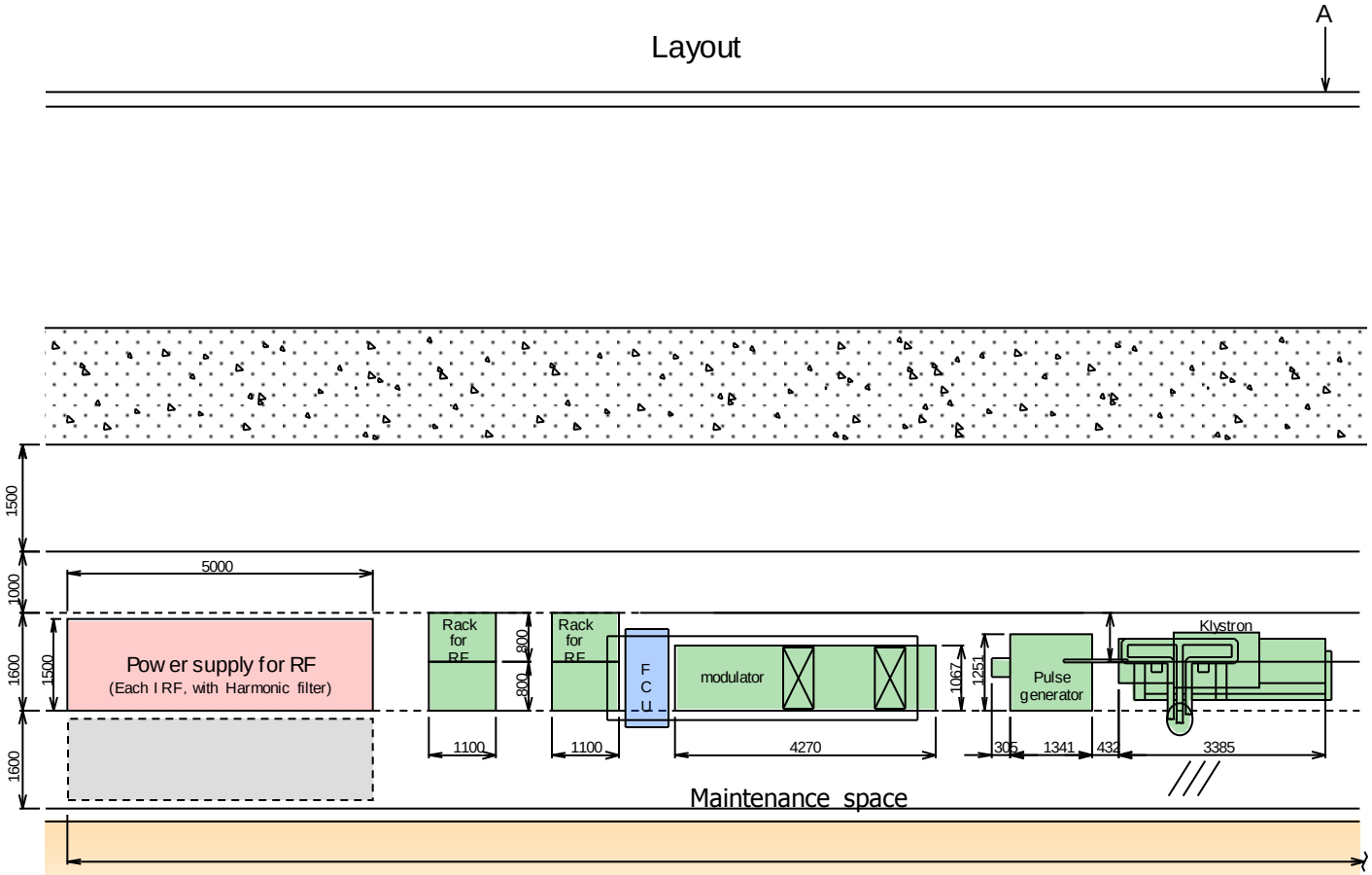

Electrical Power System
ML Tunnel Floor (Detail 2)

Section

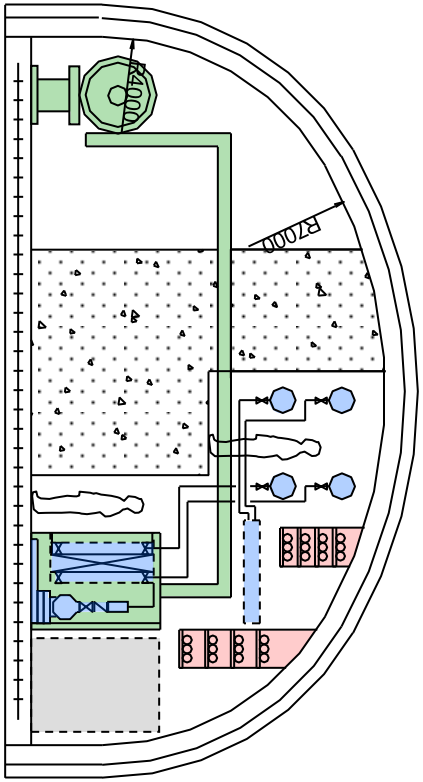

Layout

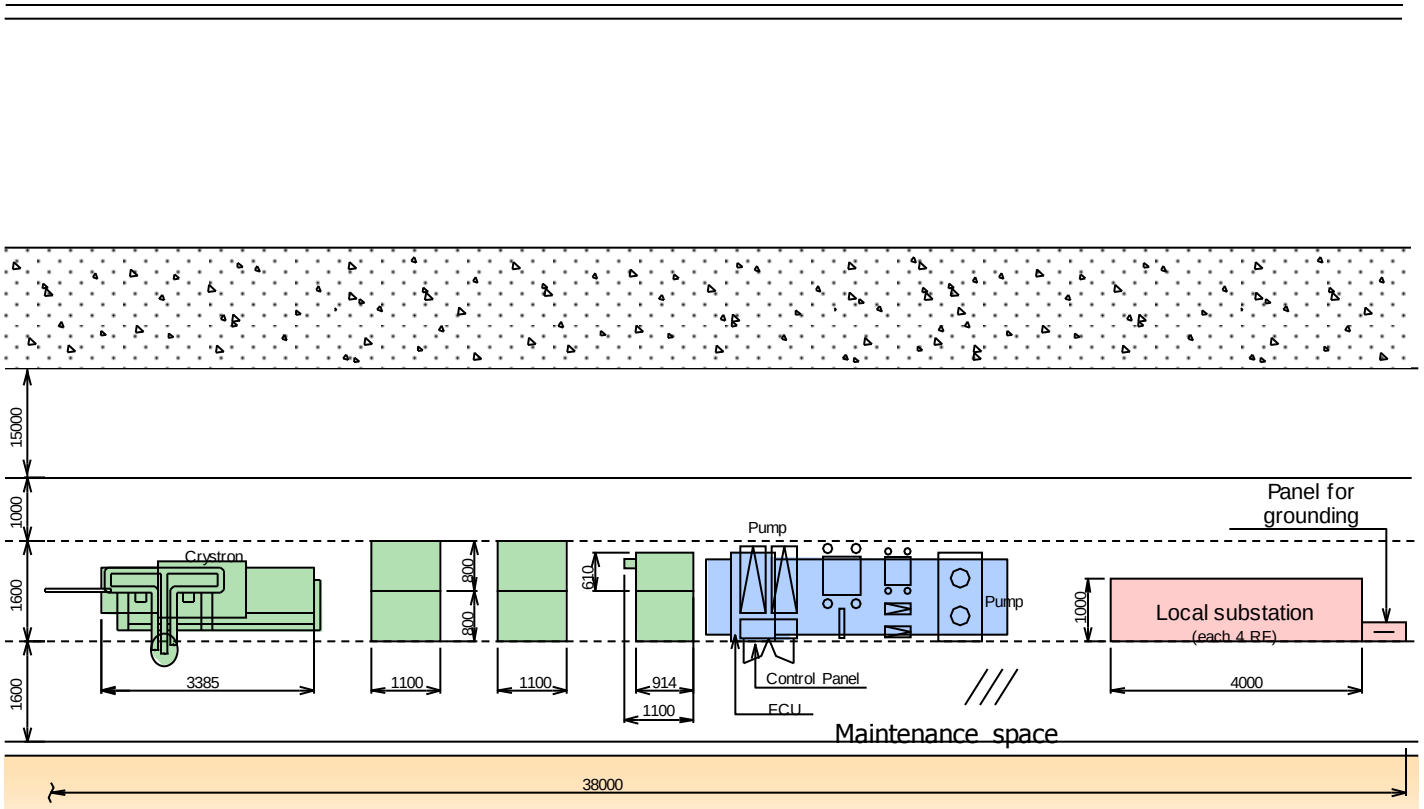

Electrical Power System

ML Tunnel Elevation

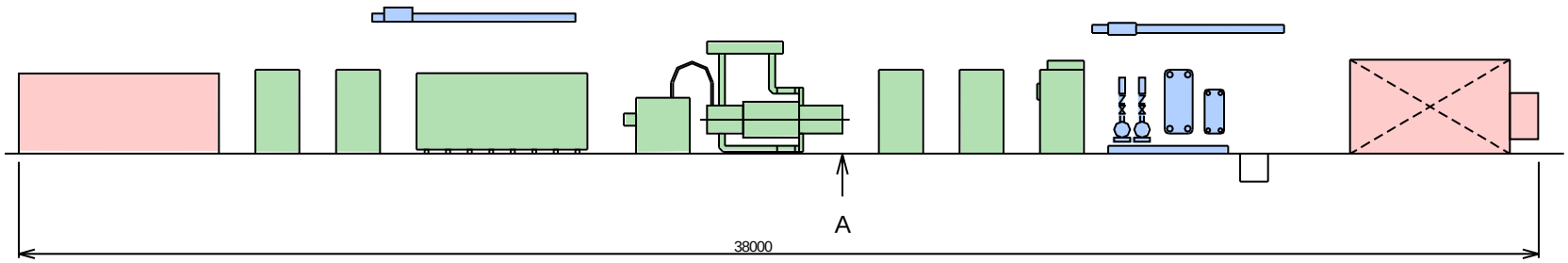

Electrical Power System
ML Tunnel Elevation (Detail 1)

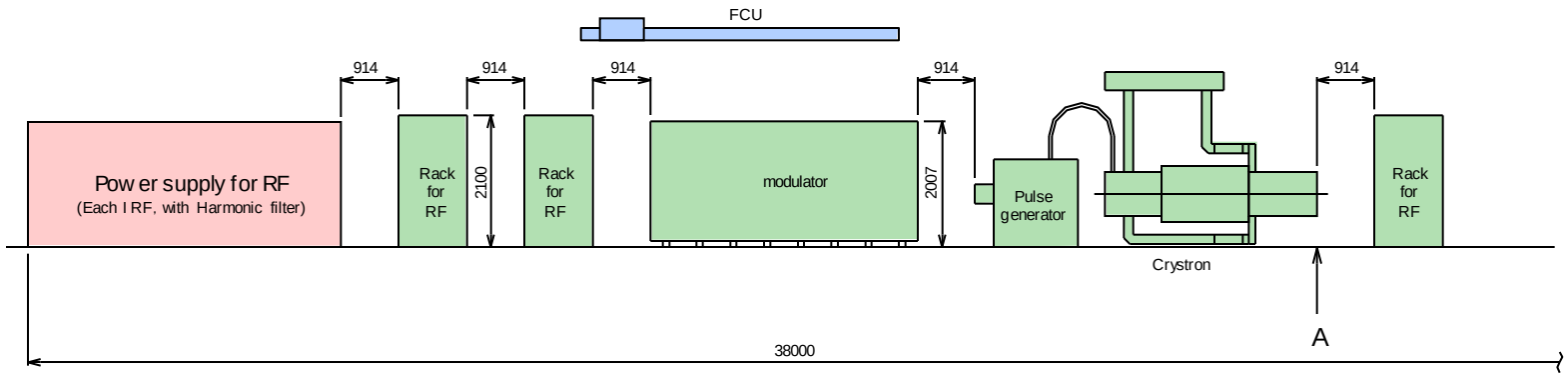

Electrical Power System
ML Tunnel Elevation (Detail 2)

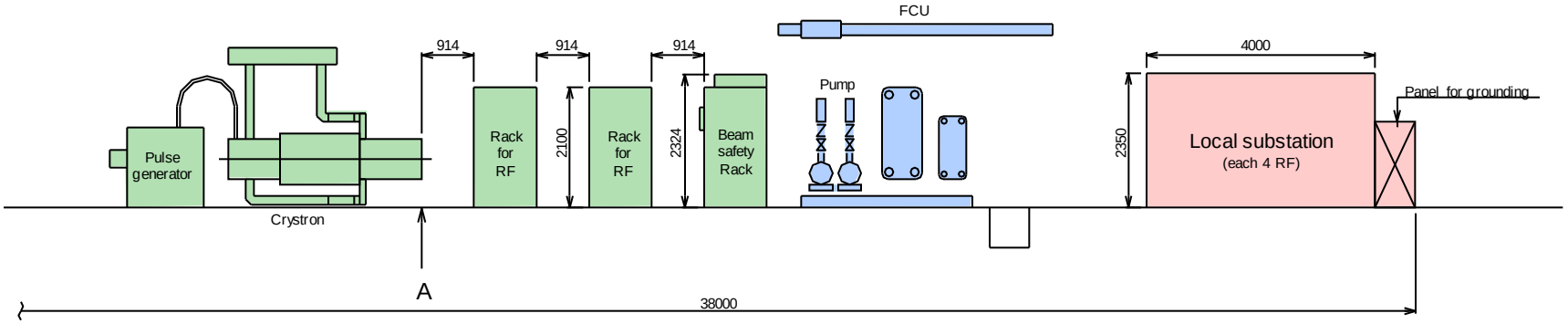

Grounding System

Purpose

- Avoid influences of electric leakage from other machines
- Produce signal base for information systems
- Thunder lightning protection

Electrical Grounding System

Typical Model of Tunnel Ground System

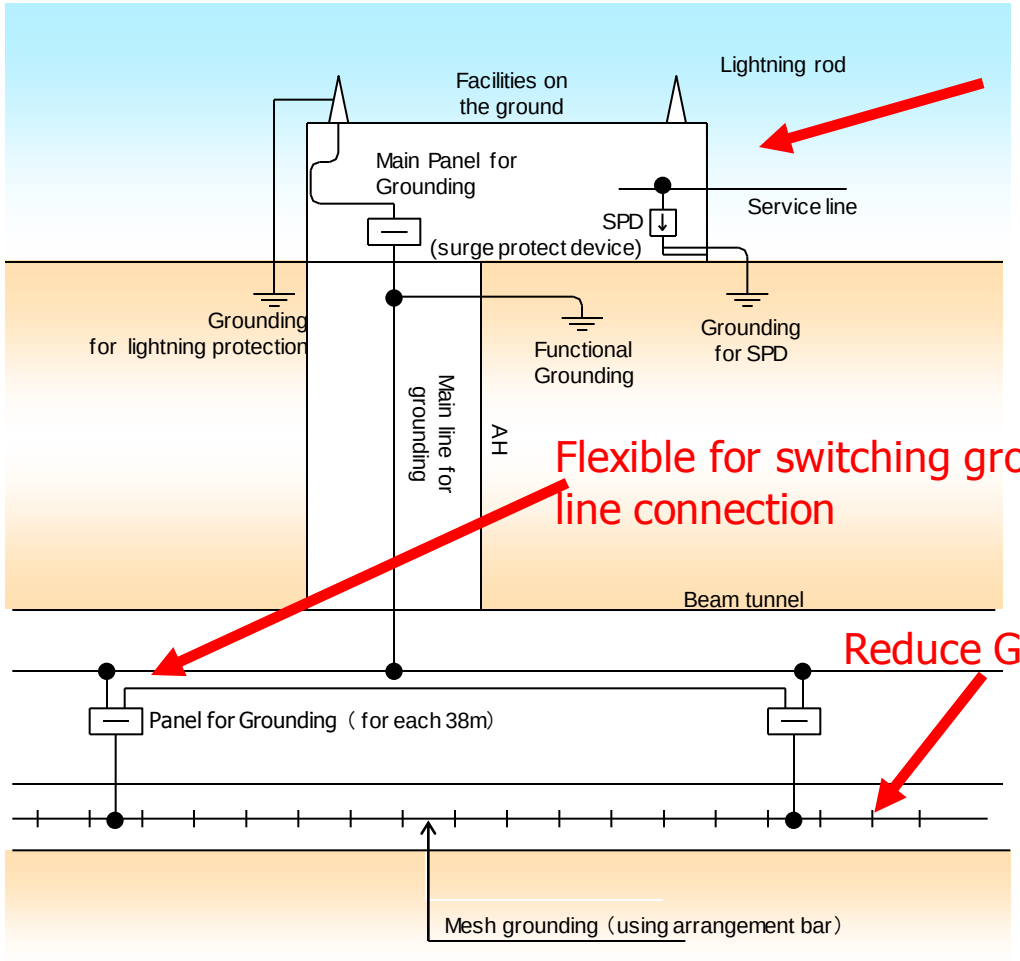

Lightning Protection On the ground

Flexible for switching grounding line connection

Reduce Grounding Resistance

Communication Network System

Design Concept

- Reliability of Network for Information System
- Reducing Space by Unified wiring management
- Efficient Network by Unified wiring for Reducing Construction Cost

Communication Network System

Needs for ILC

① Systems for Communication
- internet
- telephone
- pubulic address or paging

② Systems for Lineac control

③ Systems for Safety
- fire ditection and guide
- Radiation safety management

④ Systems for monitoring
- electric power system monitoring
- camera monitoring
- air condition and pump monitoring

Communication Network System

Equipment

Network infrastructures

panel

wiring

rack

Communication Network System

Overall network system concept

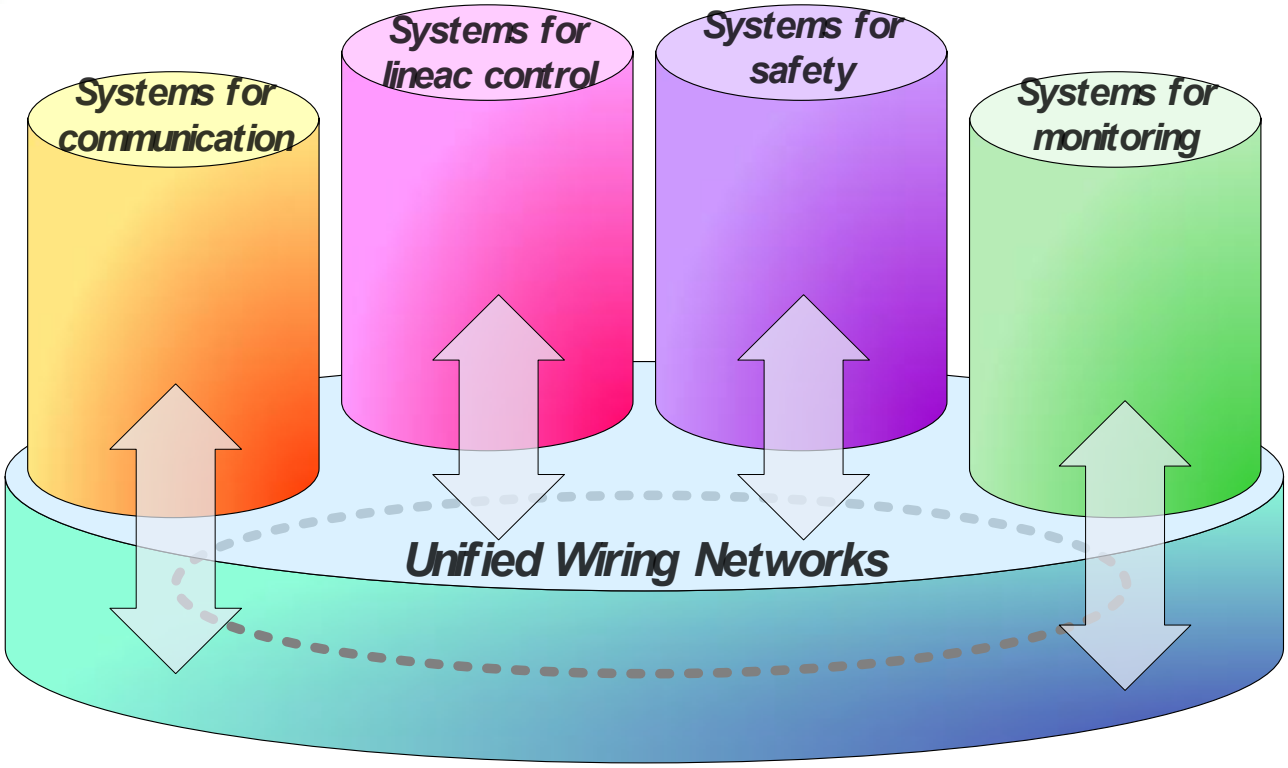

Assumed systems based on unified Wiring Networks with back-up can reduce space.

Summary

① Electrical Power System

⟶ Electrical Power System is discussed taking account of reliability , efficiency, and cost.

⟶ Electrical equipment layout were discussed to determine the cavern size of substations.

Summary
Asia region electrical design

② Electrical Grounding System

⟶ A grounding system for a hard-rock mountain site was discussed.

③ Communication Network System

⟶ Unified and extended network system was proposed taking advantage of sufficiently radiation-shielded "Kamaboko-type" service tunnel.

Appendix

ILC 'Area System'

- Superconducting Electron/Positron Linear Accelerators-

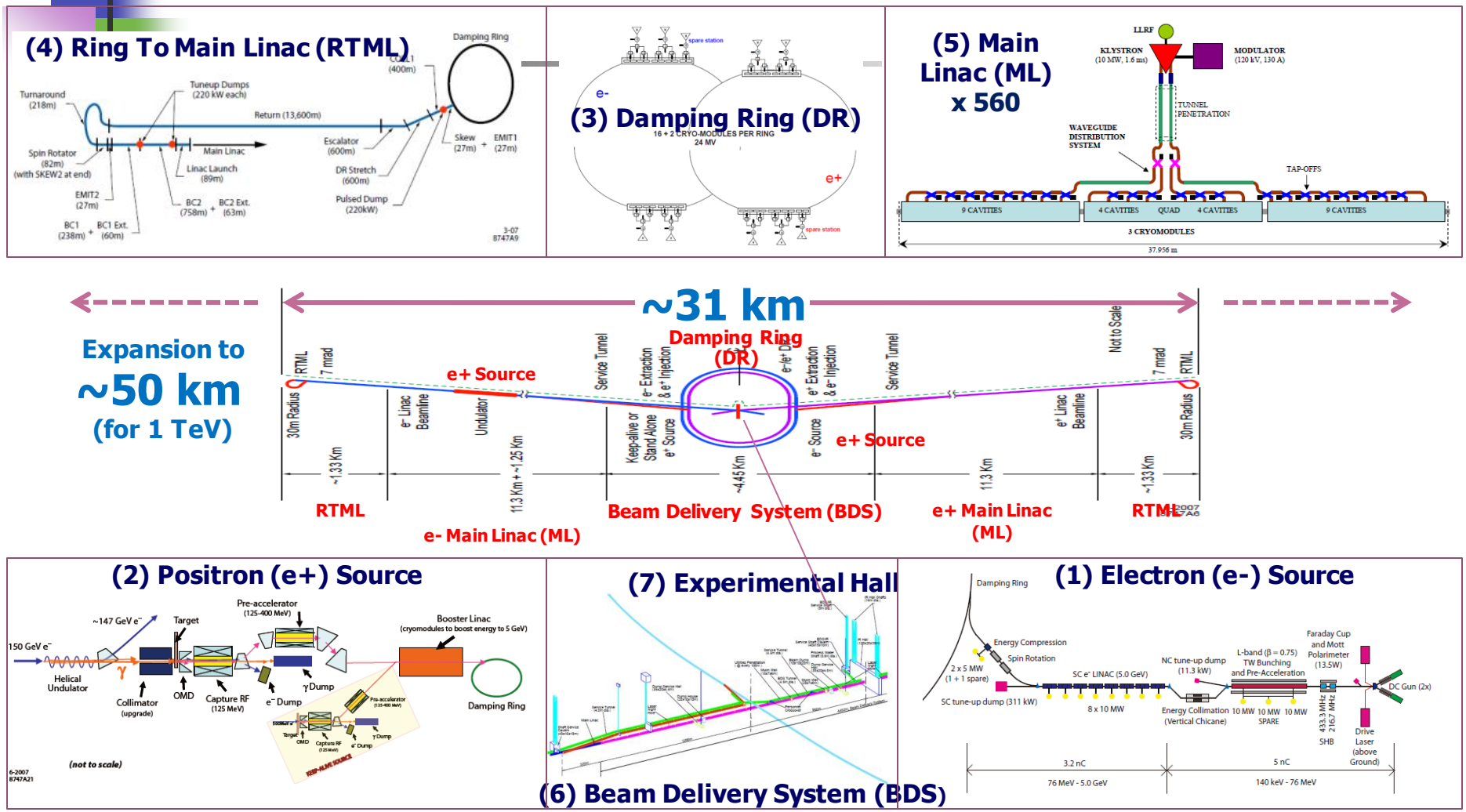

Design Progress from 2005 to 2009

Reference Design Report (RDR) published in 2007.

Re-baselining for cost containment undergoing.

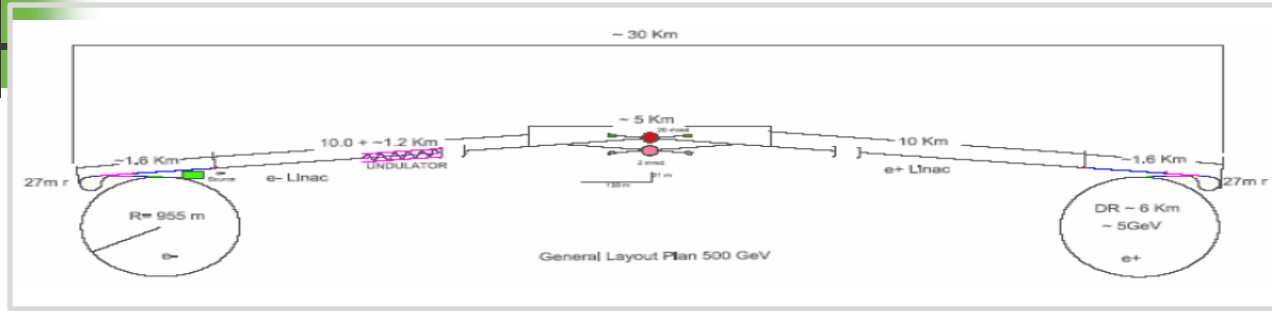

Baseline Configuration Document

BCD (2005)

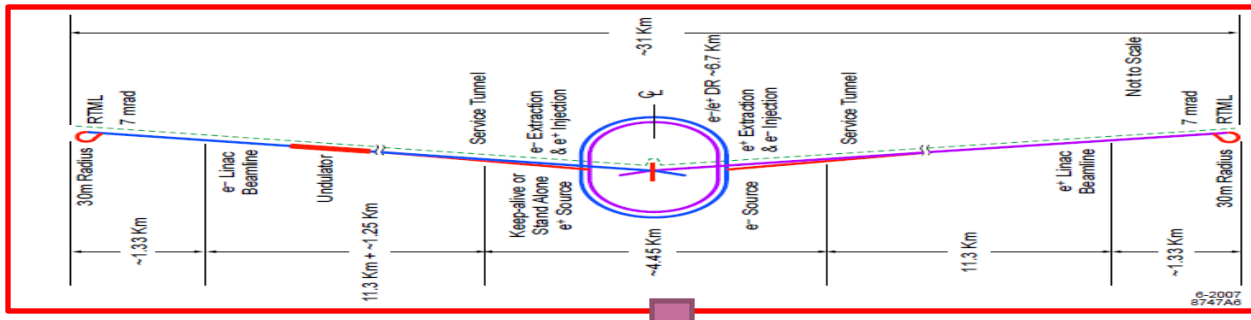

Reference Design Report

RDR (2007)

Current Baseline

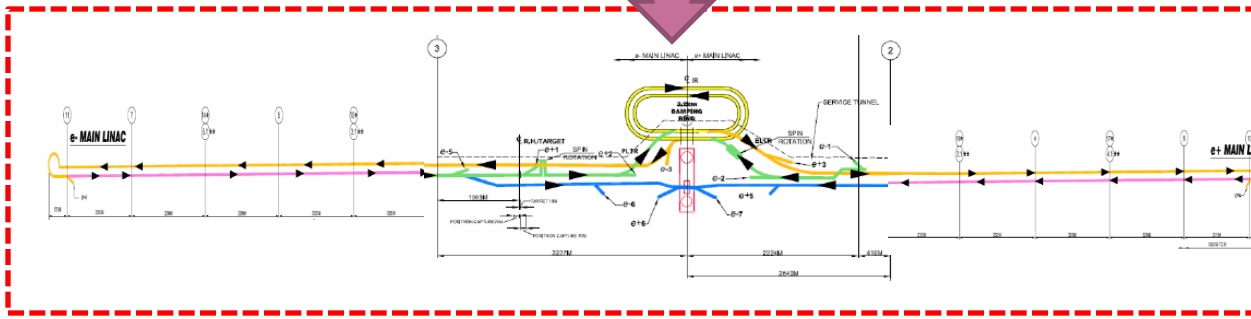

Strawman Baseline for Technical Design Phase2 (2010-2012)

SB2009

Re-baselining

Main Linac (ML) RF Unit in RDR

- **Twin-tunnel** accelerator configuration -

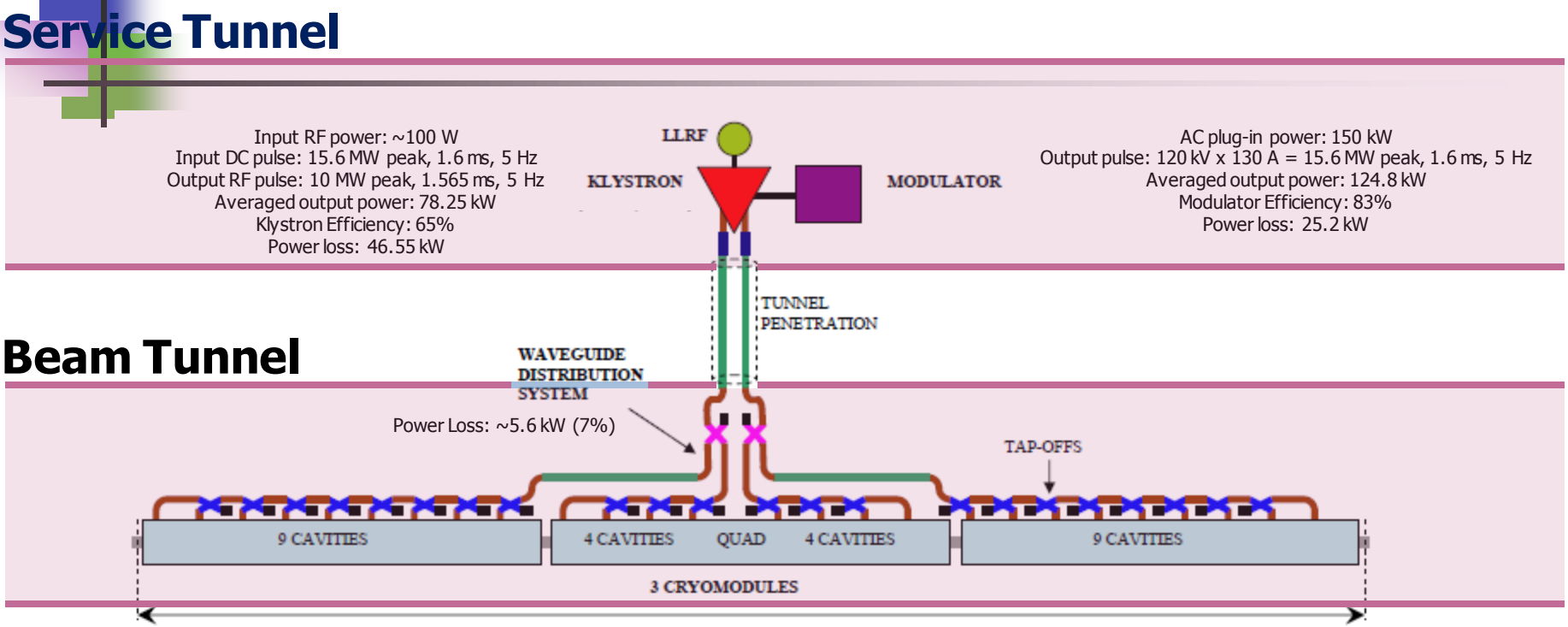

37.956 m

e- ML	282 RF units
e+ ML	278 RF units
Total	**560 RF units**

Field gradient: 31.5 MV/m

Energy gain per RF unit : **850 MeV**

(with 22% tuning overhead)

ML RF Unit

- Distributed RF System (DRFS) -

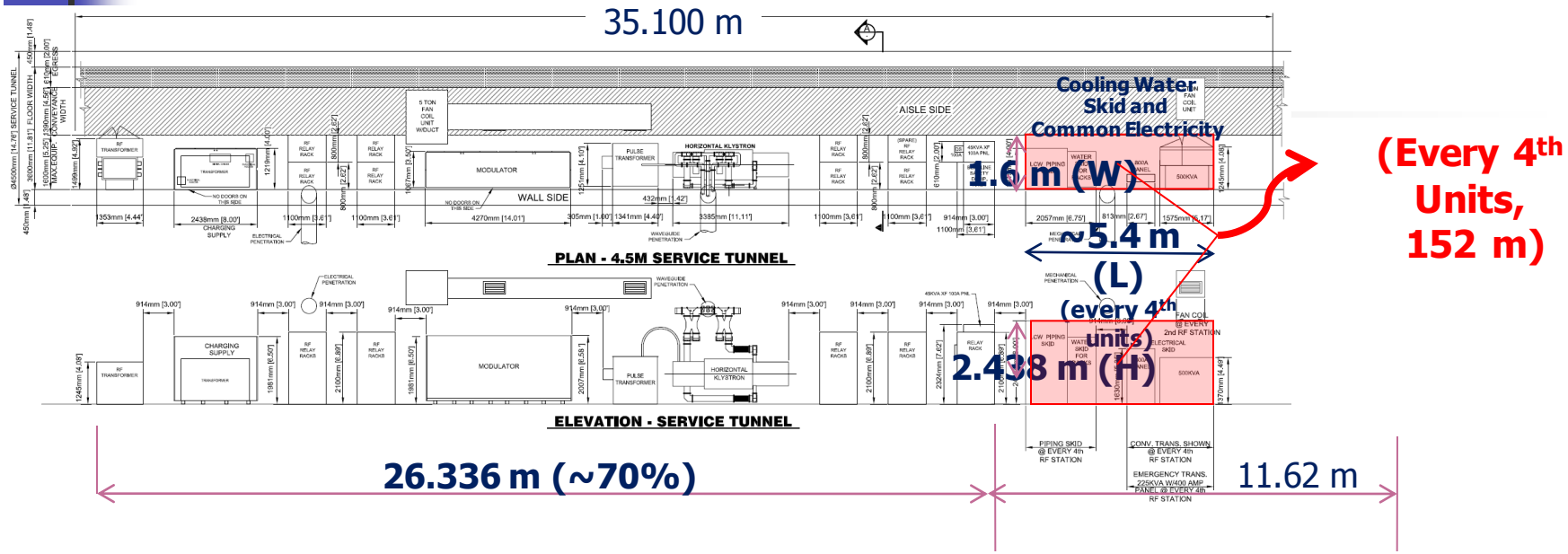

Cryogenic System Configuration in RDR

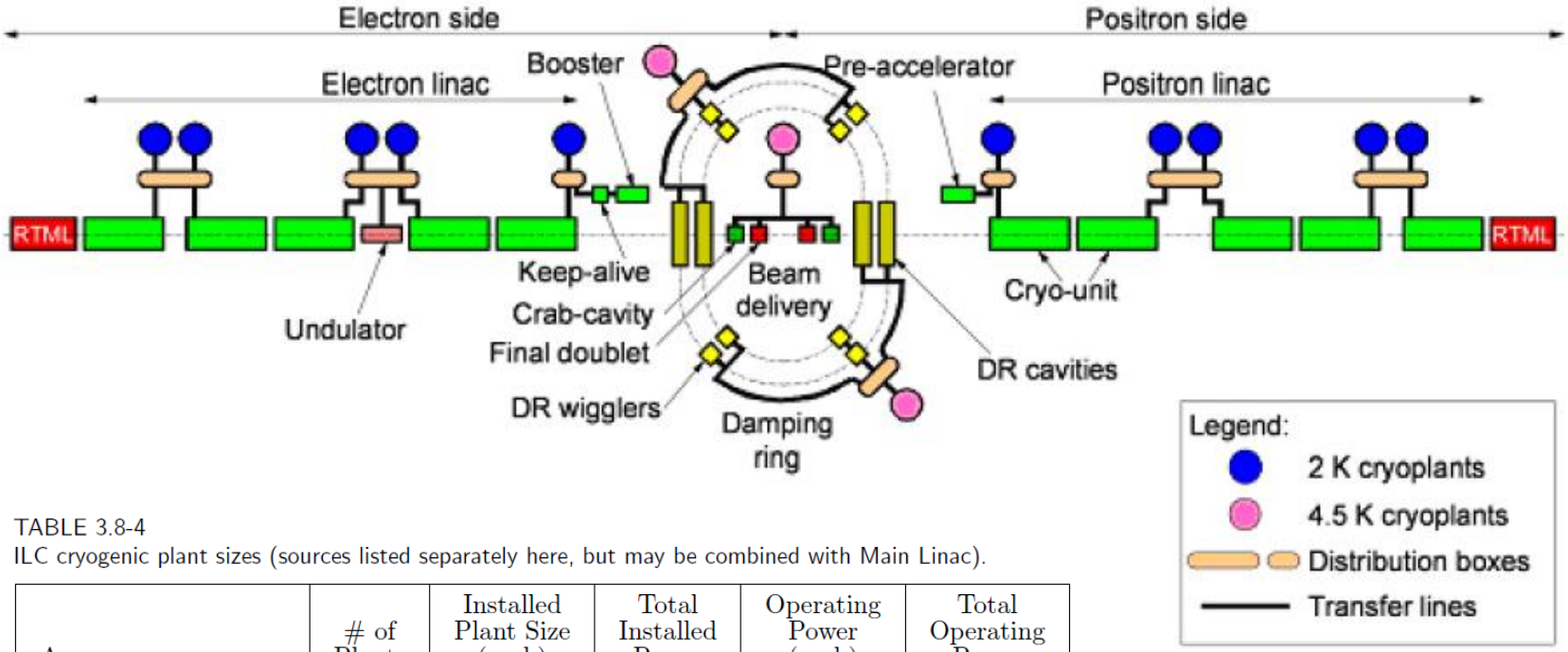

TABLE 3.8-4
ILC cryogenic plant sizes (sources listed separately here, but may be combined with Main Linac).

Area	# of Plants	Installed Plant Size (each) (MW)	Total Installed Power (MW)	Operating Power (each) (MW)	Total Operating Power (MW)
Main Linac + RTML	10	4.35	43.52	3.39	33.91
Sources	2	0.59	1.18	0.46	0.92
Damping Rings	2	1.26	2.52	0.88	1.76
BDS	1	0.41	0.41	0.33	0.33
Total			47.63		36.92

Electrical / Mechanical Requirements

- Electricity in RDR -

TABLE 4.3-1
Estimated nominal power loads (MW) for 500 GeV centre-of-mass operation.

Area System	RF Power	Conventional Power				Emer Power	Total (by area)
		Conv	NC Magnets	Water Systems	Cryo		
Sources e^-	1.05	1.19	0.73	1.27	0.46	0.06	4.76
Sources e^+	4.11	7.32	8.90	1.27	0.46	0.21	22.27
DR	14.0	1.71	7.92	0.66	1.76	0.23	26.29
RTML	7.14	3.78	4.74	1.34	0.0	0.15	17.14
Main Linac	75.72	13.54	0.78	9.86	33.0	0.4	134.21
BDS	0.0	1.11	2.57	3.51	0.33	0.20	7.72
Dumps	0.0	3.83	0.0	0.0	0.0	0.12	3.95
Totals (by system)	102.0	32.5	25.6	17.9	36.9	1.4	216.3

Electricity Distribution

- 66 kV High Voltage Line Along The Site (Asian Regional Plan)

Surface

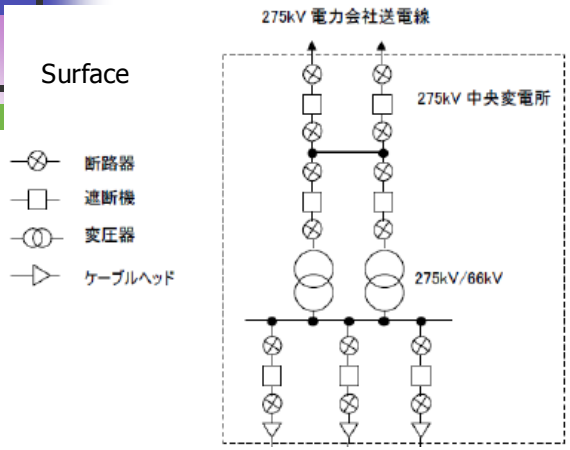

Service Tunnel (RDR) / Main Tunnel (SB2009)

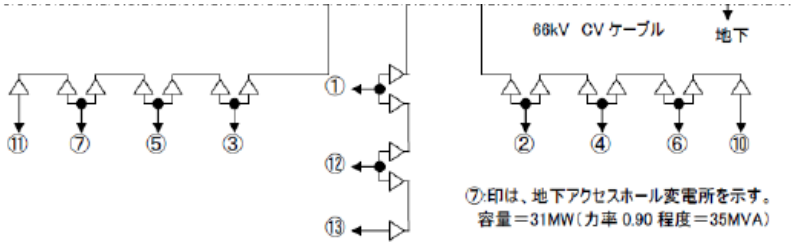

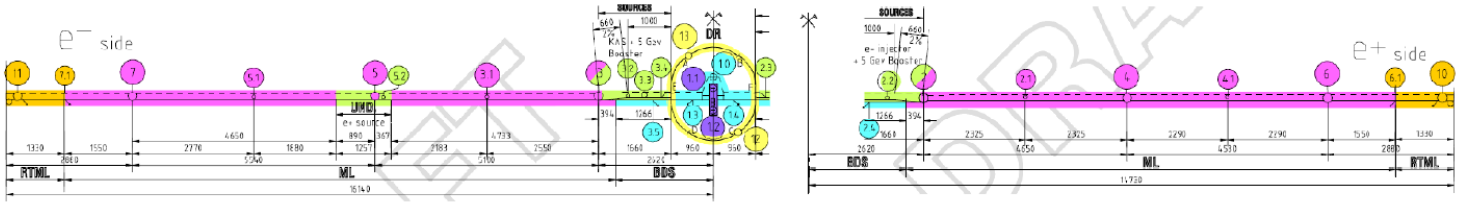

AREA		TOTAL		11	RTML	ML-7A	7	ML-7B	ML-5A	UND	5	ML-5B	ML-3A	3	KAS+5GV	BDS	1	BDS	13	DR	12	e-Inj+5GeV	2	ML-2A	ML-4B	4	ML-4A	ML-6B		ML-6A	RTML
Length						1550		2480	2167	1257		2246	2476		1266	960		960				1266		2476	2171		2095	2480		1550	
Total site power (max)																															
Total site power (@500GeV)		223.7			8.6	7.7	6.8	12.3	10.7	17.5	6.8	11.1	12.3	3.4	4.9	5.7	0.3	5.7	13.1	0.0	13.1	4.9	3.4	12.3	10.7	6.8	10.4	12.3	6.8	7.7	8.6
					8.6		26.7				46.2			20.6			11.7						20.6			27.9			26.7		8.6
1.3-GHz SCRF unit																															
no.					16	40		64	56			58	64		8							8		64	56		54	64		40	16
AC plug-in (max)	MW	98.3			2.59	6.47		10.35	9.06			9.38	10.35		1.29							1.29		10.35	9.06		8.73	10.35		6.47	2.59
AC plug-in (@500GeV)	MW	89.9			2.37	5.92		9.47	8.28			8.59	9.47		1.18							1.18		9.47	8.28		7.99	9.47		5.92	2.37
Conventional	MW	14.7			0.39	0.97		1.55	1.35			1.40	1.55		0.19							0.19		1.55	1.35		1.31	1.55		0.97	0.39
NC magnets	MW	0.8			0.02	0.06		0.09	0.08			0.08	0.09		0.01							0.01		0.09	0.08		0.08	0.09		0.06	0.02
Water system	MW	10.7			0.28	0.70		1.13	0.99			1.02	1.13		0.14							0.14		1.13	0.99		0.95	1.13		0.70	0.28
Emergency	MW	0.4			0.01	0.03		0.05	0.04			0.04	0.05		0.01							0.01		0.05	0.04		0.04	0.05		0.03	0.01
Cryogenic plant																															
no.							2				2			1	1		1		1		1	1	1			2			2		
Installed power (max)	MW	47.6					8.70				8.70			4.35	0.59		0.41		1.26		1.26	0.59	4.35			8.70			8.70		
Operation power (@500MeV)	MW	36.9					6.78				6.78			3.39	0.46		0.33		0.88		0.88	0.46	3.39			6.78			6.78		
Others																															
RF	MW	19.5			1.20					3.06					0.00				7.00		7.00	0.00									1.20
Conventional	MW	17.8			1.50					6.13					1.00	2.47		2.47	0.86		0.86	1.00									1.50
NC magnets	MW	24.8			2.35					8.17					0.72	1.29		1.29	3.96		3.96	0.72									2.35
Water system	MW	7.2			0.39										1.13	1.76		1.76	0.33		0.33	1.13									0.39
Emergency	MW	0.9			0.06					0.15					0.05	0.16		0.16	0.12		0.12	0.05									0.06