Westfälische Wilhelms-Universität Münster

XENON Dark Matter Project

Purification System for Xenon

ASPERA Technology Forum, Darmstadt, 13. – 14. März 2012

living.knowledge WWU Münster

Christian Huhmann, IKP Münster

Need for Purification

Electronegative impurities (e.g. O_2, H_2O)

→ The signals (scintillating light, electrons) will be absorbed by this elements

Radioactive impurities (^{85}Kr, $t_{1/2}$ = 10.76 a)

→ β-decay gives background and decreases the sensitivity of the detector

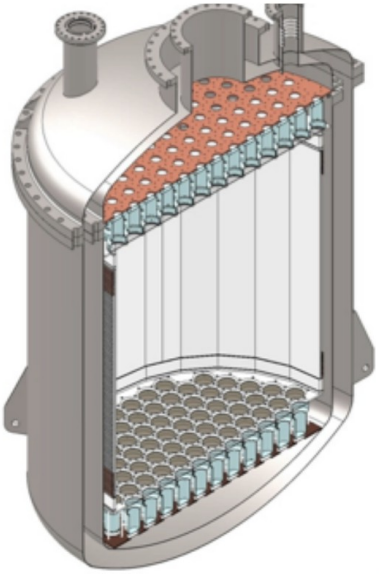

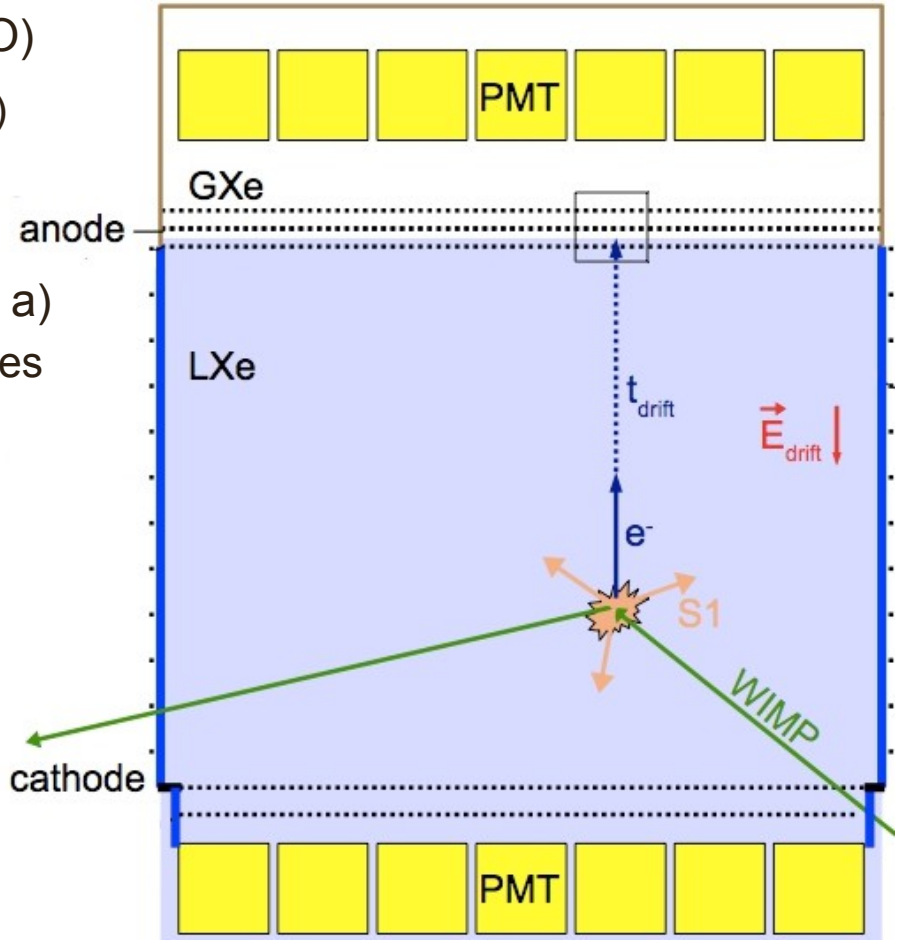

Purification System in Münster

Prototype for the XENON1T Gassystem

- ultra clean conditions
- electro-polished surfaces, ultrasonic cleaning
- VCR Fittings, pneumatic valves, orbital welded
- bakable up to 150 °C
- recirculation flow: KNF Pump: ~10 slpm
  QDrive Pump: ~100 slpm
  (low leak rate, low outgasing)

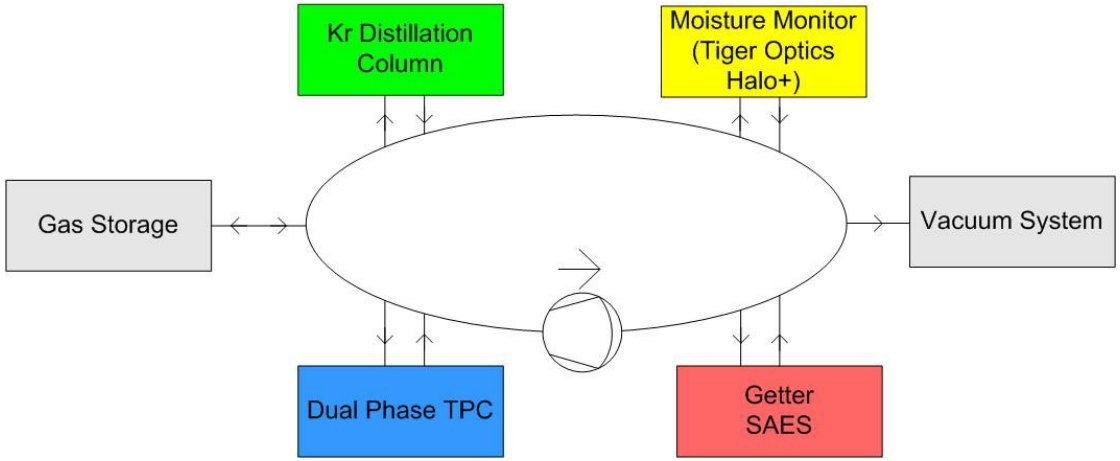

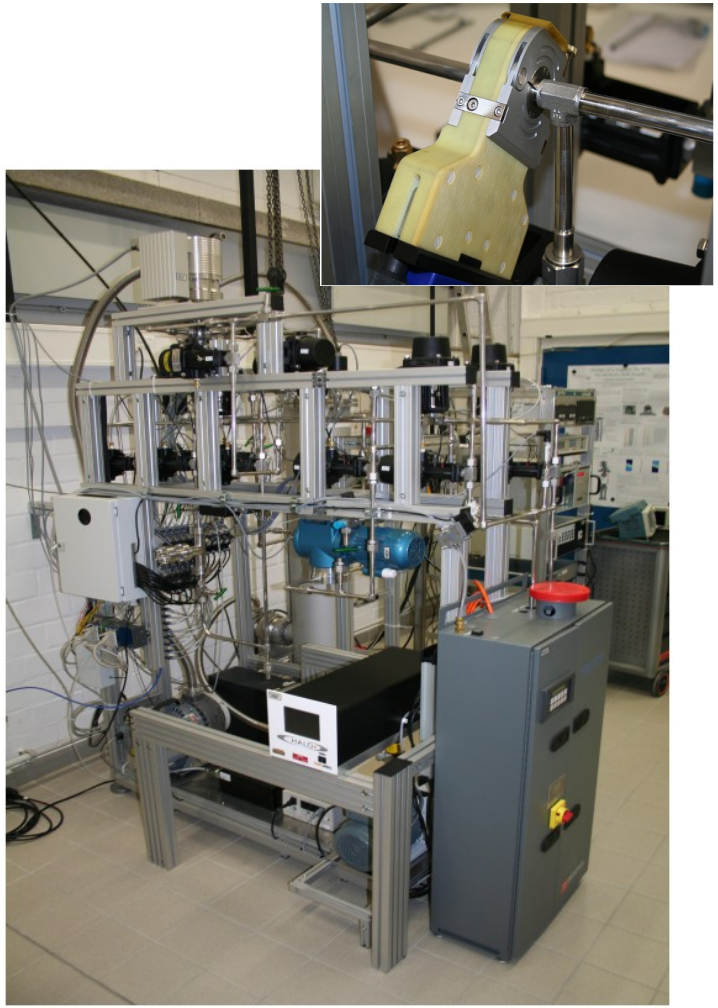

Monitoring Devices

Tiger Optics, Halo+ Moisture Monitor

- Humidity Detection via Laser Spectroscopy
- Detection Limit: 400 ppt
- First Measurement after 11 days of purification: 2.8 ppb

Liquid Xenon TPC

- Purity measurement via electron drift
- 7+7 Photomultiplier
- 17 cm drift
- Remote cooling tower

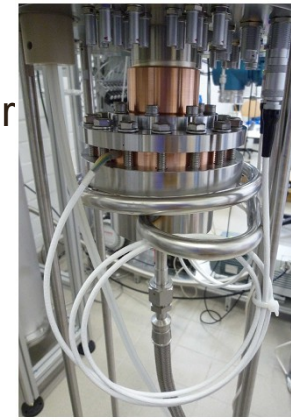

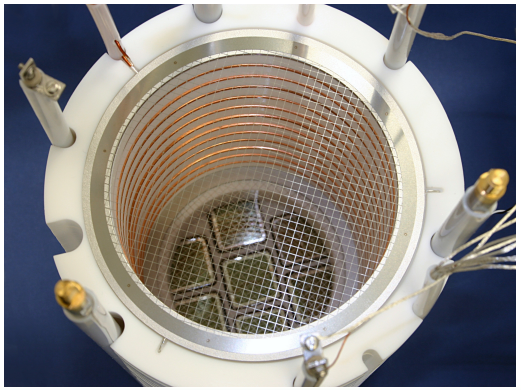

Purification Devices - Getter

Rare Gas Purifier

- hot zirconium getter (SAES PS4-MT50)
- Irreversible binding of the impurity molecules
- up to 100 slpm
- Impurity removal: < 1 ppb
  (O_2, CO, CO_2, H_2O, H_2, N_2, CH_4)

Purification Devices - Column

Cryogenic Distillation Column for Kr removal

- utilize different boiling temperature of Xe and Kr
- proven technique, currently used at XENON100 for low feed and ^{nat}Kr/Xe ~ 20ppt

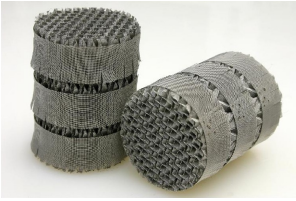

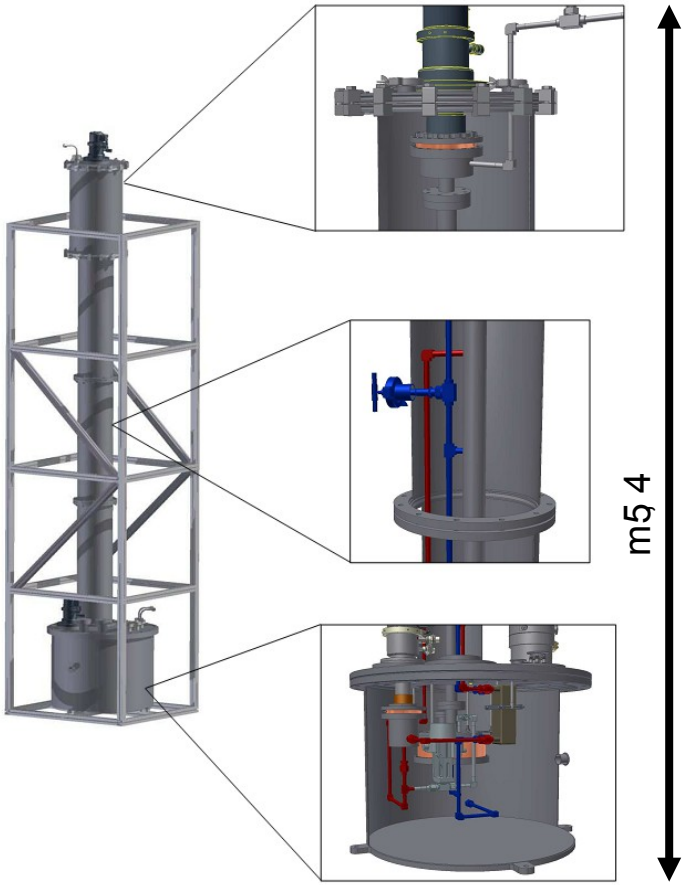

Design Parameters

Feeding flow rate:	3kg/h
Kr Removal:	^{nat}Kr/Xe < 1ppt
Xe Recovery:	99%
Packing Material:	structured packing, Sulzer EX, ∅ 45 mm
Cooling Power:	2 cold heads, 250W at LXe Temperature
Characterization:	^{83m}Kr tracer method, RGA, ATTA, GC-MS

Gas Quality Analysis

Enhancing the sensitivity of a commercial quadrupol RGA by a cold trap

- Xenon freezes out to partial pressure
- Increasing the fraction of Krypton in sample gas

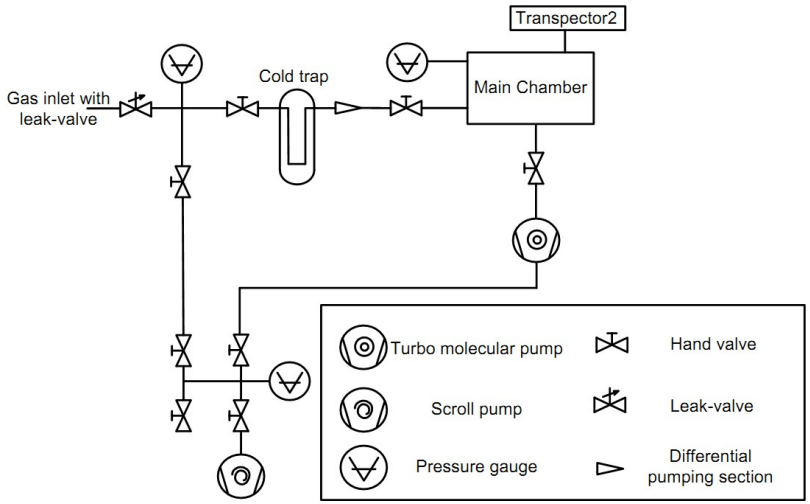

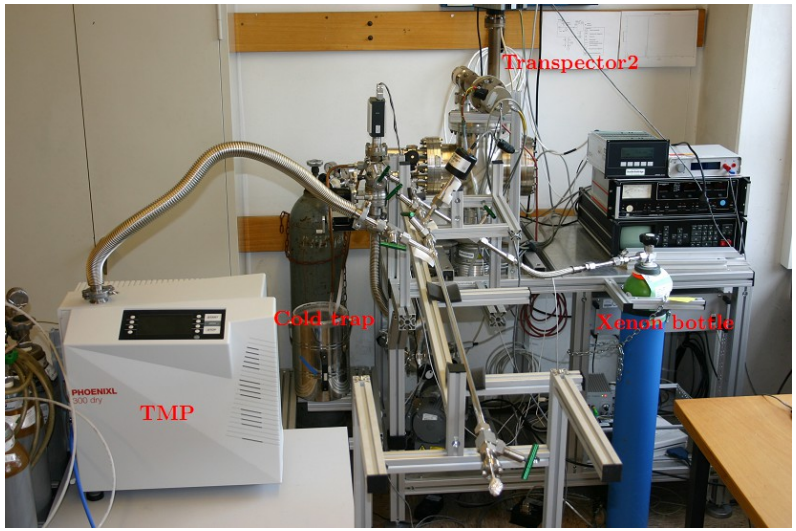

Other low level counting methods:

- Atom trap trace analysis (ATTA)
- Gas chromatography mass spectrometry (GC-MS)

Thanks for your attention !

Our work on XENON100 is supported by DFG,
Großgerät „Kryogene Edelgase“ supported by DFG, NRW, WWU
Work on XENON1T is supported by BMBF

Deutsche Forschungsgemeinschaft
DFG

bmb+f
Großgeräte der physikalischen Grundlagenforschung