BACKGROUND

Cryogenic Ltd is a recognised leader in the development and manufacture of advanced High Field Measurement Systems for the study of the electrical, magnetic or thermal properties of materials.

With proven experience in the manufacture of high field superconducting magnets up to 21 Tesla and low temperature equipment operating with and without the use of liquid helium, Cryogenic can offer the optimum solution for every type of research at high field and low temperature.

CRYOGENIC
CRYOGENIC LIMITED

CRYOGENIC – THE EXPERIENCE, THE FACILITY AND COMPETITIVE ADVANTAGES

- *Over 30 years experience in superconducting magnet technology*
- *Complete in-house control of all aspects of design, technology and production*
- *Pioneers and leaders of cryogen-free magnet technology*
- *Flexibility in meeting customers' requirements*
- *Extended customer support including on-line assistance with programming and running experiments.*

15T, 200mm Room Temperature Bore Magnet

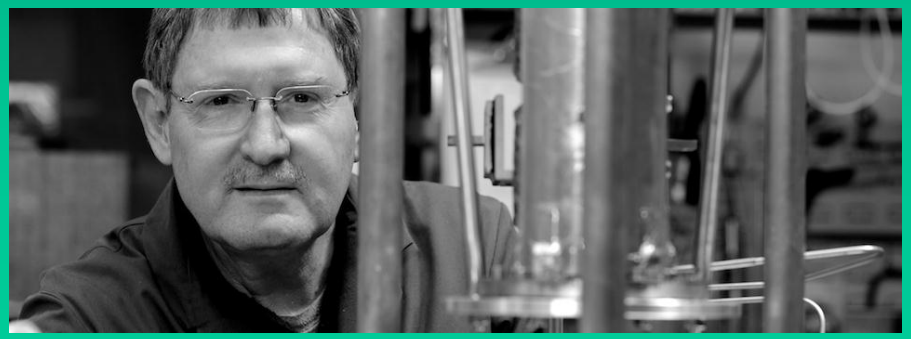

THE PRODUCT RANGE AND SYSTEMS DELIVERED

- **Cryogen Free measurements systems to 18 Tesla**
- **High Field Magnet systems**
- **UHV / split pair magnet systems**
- **Vector Field Magnet systems**
- **Beam line / optical magnet systems**

CRYOGENIC
CRYOGENIC LIMITED

CRYOGEN FREE MEASUREMENT SYSTEMS

CRYOGENIC
CRYOGENIC LIMITED

CRYOGEN FREE MEASUREMENT SYSTEMS

MiniVSM to 9 Tesla with top loading inserts for AC Susceptibility, Thermal Transport and He-3 temperatures down to 300mK

16 Tesla, 50mm bore Cryogen Free system with dual pulse tube cryocoolers.

CRYOGENIC
CRYOGENIC LIMITED

Cryogen Free Dilution Refrigerator down to 10mK

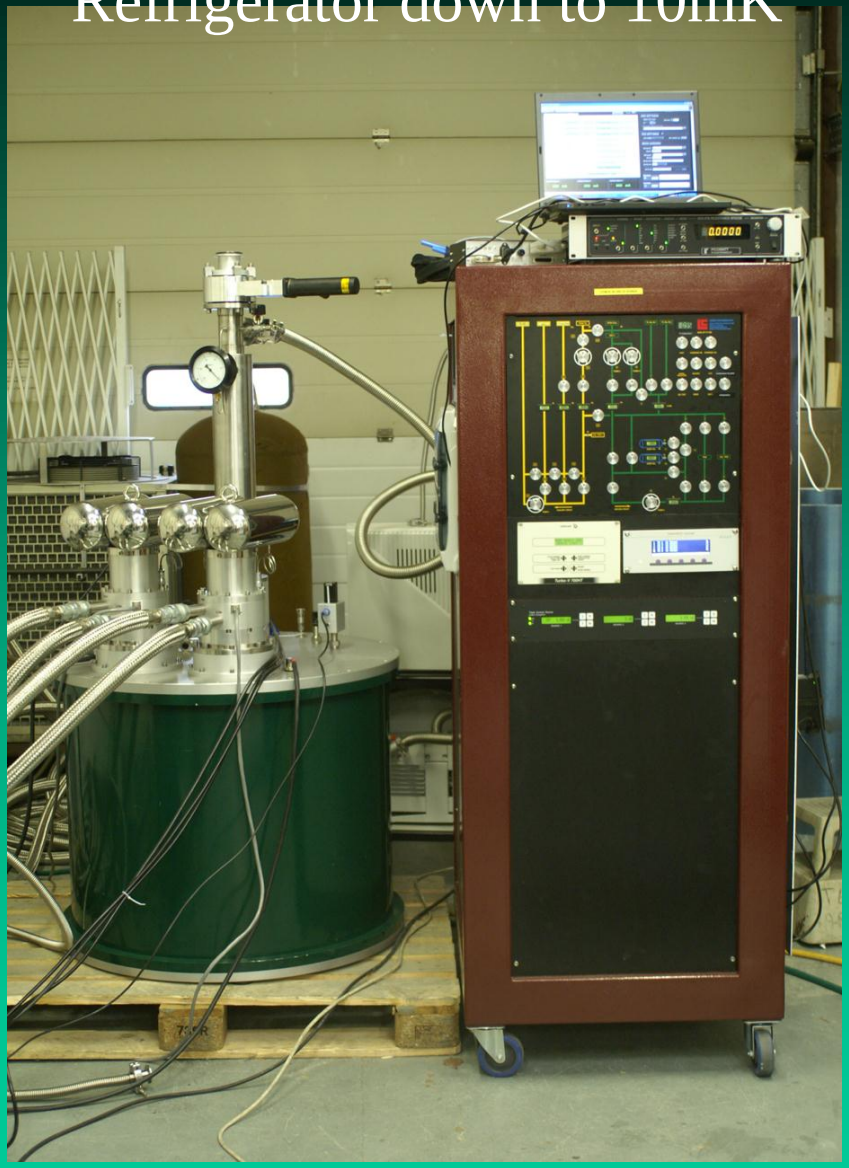

7 Tesla Cryogen Free SQUID Magnetometer

CRYOGENIC
CRYOGENIC LIMITED

- 21 Tesla 40mm RT bore superconducting magnet

- with top loading He-3 insert down to 300mK

18.8 Tesla Magnet system for Diamagnetic Levitations

Cryogen-free top loading Helium-3 Refrigerator.

CRYOGENIC
CRYOGENIC LIMITED

TOP LOADING MEASUREMENT SYSTEM PROBES.

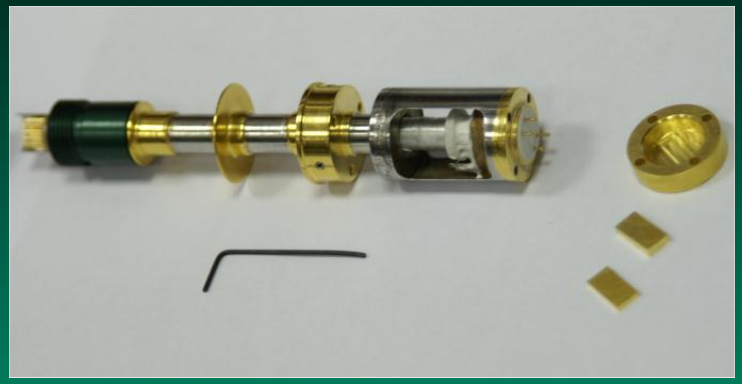

High Temperature VSM

Thermal transport probe

Specific Heat probe

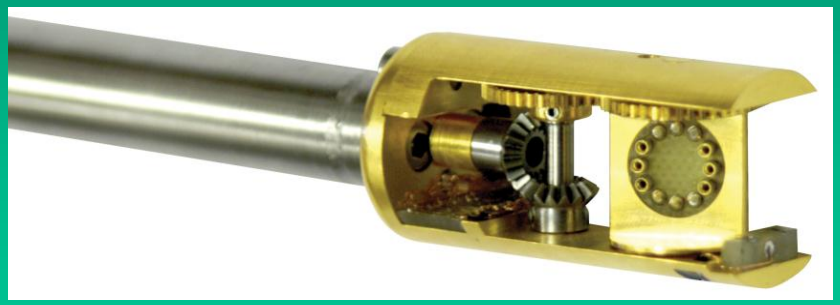

Rotating Sample probe

CRYOGENIC
CRYOGENIC LIMITED

UHV MAGNET SYSTEMS

CRYOGENIC
CRYOGENIC LIMITED

UHV 2-AXIS SPLIT PAIR MAGNET

- 9 T along main axis
- 4T along secondary axis
- 8 T/min ramp rate on main coil
- 4 way UHV access to sample
- Vacuum sample change
- Electrically isolated sample mount

CRYOGENIC
CRYOGENIC LIMITED

UHV SYSTEM UNDER TEST AT CRYOGENIC

UHV SYSTEM UNDER TEST AT CRYOGENIC

6 TESLA SPLIT PAIR MAGNET

- Cryogen Free UHV cryostat.
- Radial split of 50mm for optimised optical access.
- 7 radial access ports at 45 degrees.
- Used for electron beam ion traps to be developed at the Max-Planck Institute for Nuclear Physics

CRYOGENIC
CRYOGENIC LIMITED

6 TESLA SPLIT PAIR MAGNET

- Cryogen Free UHV cryostat.
- Adjustable magnet tie rods
- External magnet alignment.
- Internal Iron pole piece.
- Delivered as part of an EBIS beam-line.

CRYOGENIC
CRYOGENIC LIMITED

17 T UHV MAGNET

- Highest magnetic field currently operating on any X-Ray beam line
- Ramp rate 2T/min over +17T to -17T and multiple cycles
- Vacuum bore
- Low-loss Helium Cryostat

CRYOGENIC
CRYOGENIC LIMITED

VECTOR FIELD MAGNET SYSTEMS

CRYOGENIC
CRYOGENIC LIMITED

3D VECTOR MAGNET: 9 T/ 5 T/ 1 T

- Large 50mm magnet bore and 30mm space in the DR.
- Top loading Dilution Refrigerator for temperatures down to 10 mK

CRYOGENIC
CRYOGENIC LIMITED

LabVIEW Software

Polar or Cartesian Control of Field Vector

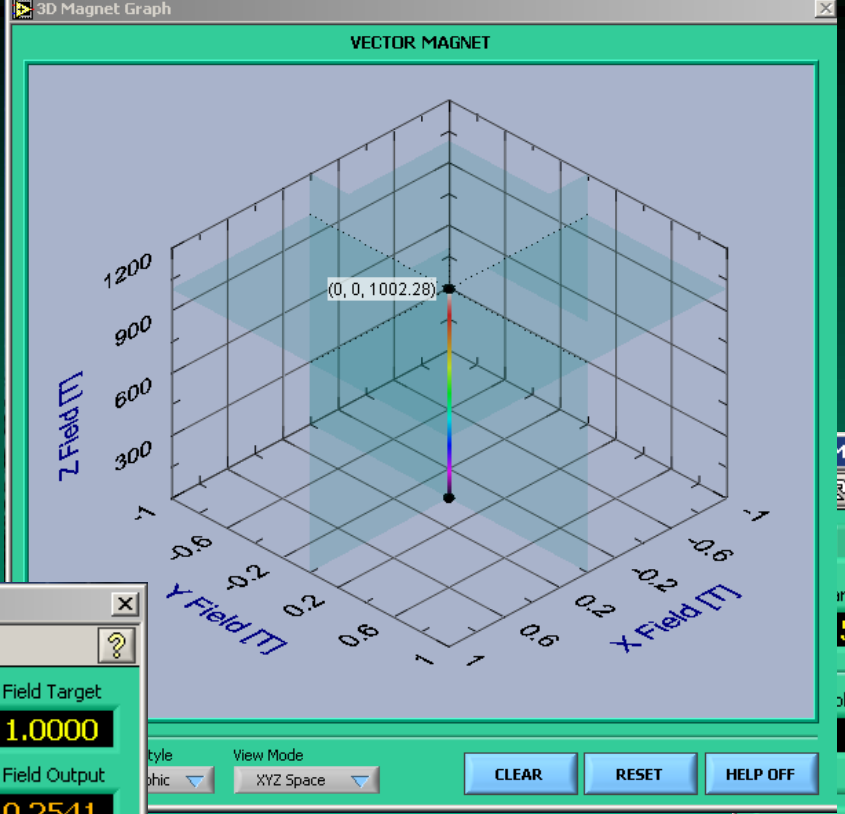

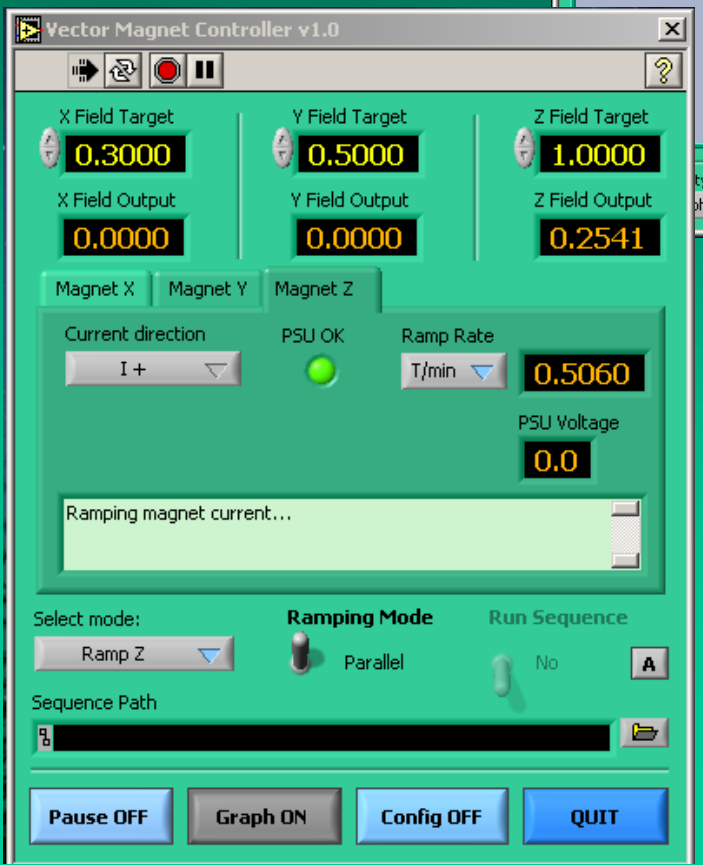

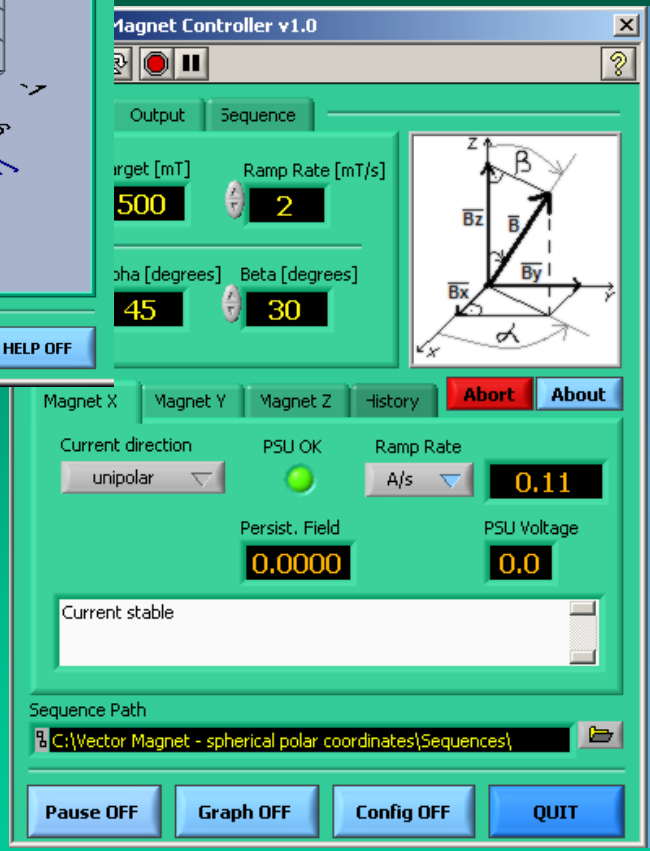

CRYOGENIC
CRYOGENIC LIMITED

BEAM LINE AND OPTICAL SYSTEMS

CRYOGENIC
CRYOGENIC LIMITED

Optical Magnet Systems

- Horizontal or Vertical field split-pair magnets (40mm split) up to 10 Tesla
- 4 way horizontal optical windows.
- VTI up to 1.6K

CRYOGENIC
CRYOGENIC LIMITED

- 10 Coil Cryogen Free Magnet System Utilising Dual Cryocoolers.
- Enclosed in Stainless Steel cryostat appropriate for UHV of 10^{-9} mbar.

CRYOGENIC
CRYOGENIC LIMITED

CRYOGEN FREE NEUTRON SCATTERING MAGNET SYSTEM

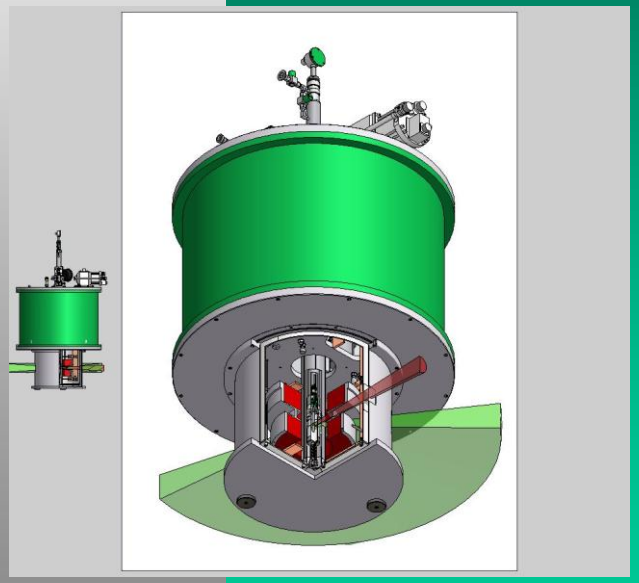

CRYOGENIC
CRYOGENIC LIMITED

5T, 300mK, Vacuum-Loading Cryogen-Free System with four-way optical access

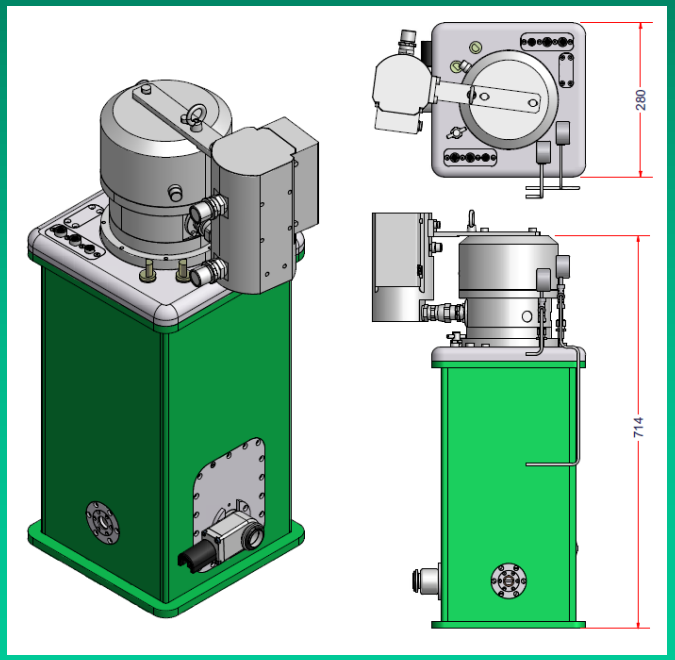

CRYOGENIC
CRYOGENIC LIMITED

4 Tesla Split Pair mini Cryogen Free Magnet

- Choice of Beryllium or optical windows in all four directions
- 1.6K – 325K variable temperature sample space
- Ultra Low Vibration 0.5W Pulse Tube Cryocooler
- Small footprint
- Portable System

7 TESLA FAST RAMPING CRYOGEN FREE MAGNET

- Ramp rate: 7 T in 6 seconds
- 70mm UHV Compatible Room Temperature Bore
- Dual 1.5W Cryocoolers with Innovative Supercritical Helium Cooling
- Niobium Tin magnet operating up to 8K

CRYOGENIC
CRYOGENIC LIMITED

5 TESLA HIFI MUON SPECTROMETER MAGNET WITH ACTIVE COMPENSATION

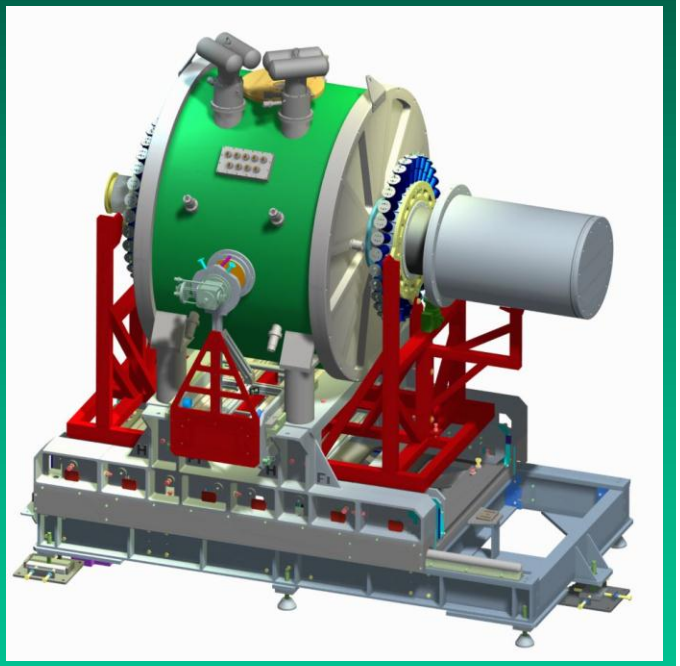

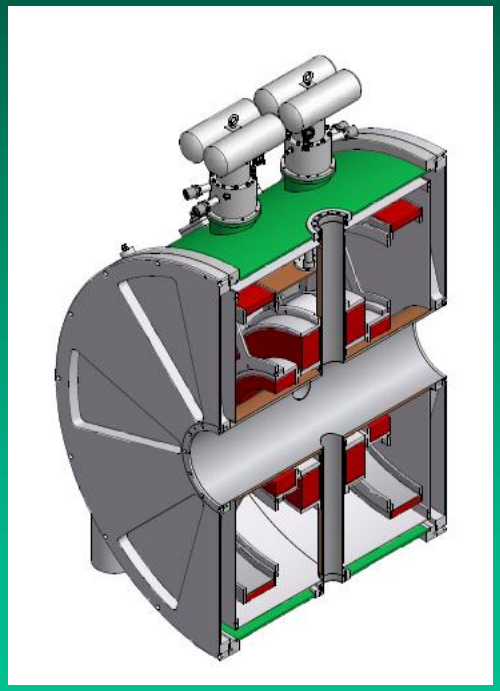

CRYOGENIC
CRYOGENIC LIMITED

17 TESLA MAGNET SYSTEM FOR SMALL ANGLE X-RAY SCATTERING

CRYOGENIC
CRYOGENIC LIMITED