Triggerless Readout Architecture for the Silicon Pixel Detector of the PANDA Experiment

INFN Istituto Nazionale di Fisica Nucleare
Sezione di Torino

Abstract : The readout architecture for the silicon pixel sensors of the PANDA MVD is presented.
The pixel detector has to provide timing, position and energy information on a event-driven base, since no trigger signal is foreseen. The readout system is based on a custom ASIC, named ToPiX, directly connected to the GBT optical transceiver.
A reduced size prototype with most of the main functionality has been designed and tested. The ASIC has been bonded to a sensor based on the epitaxial technology and tested on a beam test. Both TID and SEU tests on the ToPiX prototype have been performed.

PANDA Micro Vertex Detector layout

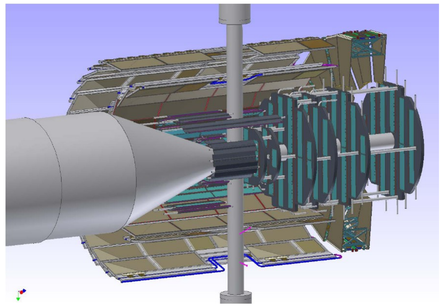

- Barrel

  Layer 1 : radius 28 mm, SPDs
  Layer 2 : radius 53 mm, SPDs
  Layer 3 : radius 92 mm, SSDs
  Layer 4 : radius 120 mm, SSDs

- Forward

  Disks 1-2 : radius 37.5 mm, SPDs
  Disks 3-4 : radius 75 mm, SPDs
  Disks 5-6 : radius 130 mm, SPDs + SSDs

Pixel module readout

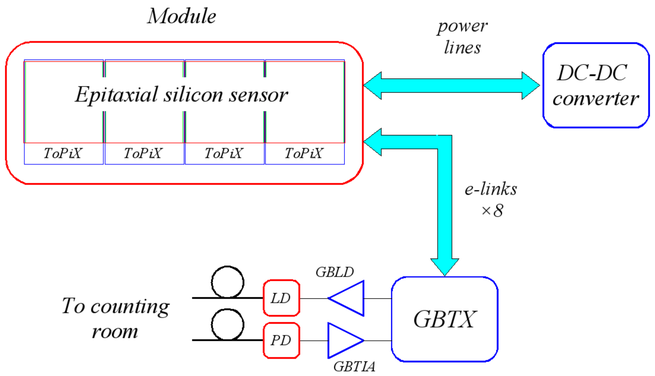

Modules can have 2,4,5 or 6 sensors

ToPiX v3

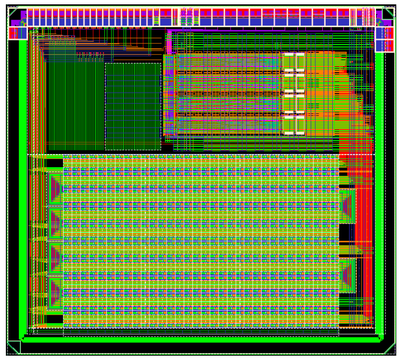

- Die size : 4.5 × 4 mm^2
- Technology : CMOS 0.13 µm
- Single 1.2 V power supply
- Bump bonding pads
- 2 × 2 × 128 cells columns
- 2 × 2 × 32 cells columns
- 32 cells EoC FIFO
- SEU protected logic via TMR (pixel cell) or Hamming encoding (EoC)
- Serial data output
- SLVS I/O

TID tests – Baseline, S-Curve, Gain

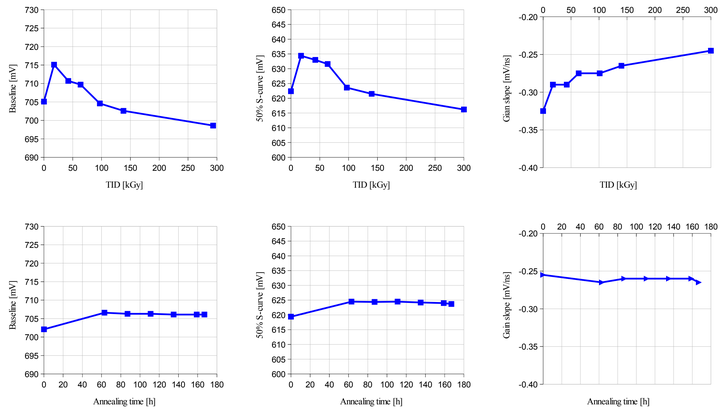

TID tests - ToT

Irradiation

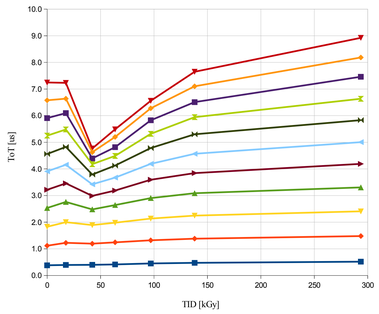

Annealing @ 80 ºC

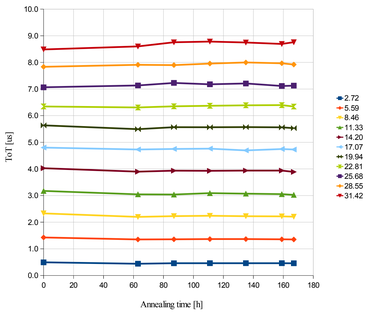

DR compression due to leakage current in the clipping circuit → *to be fixed*

Readout system for tests

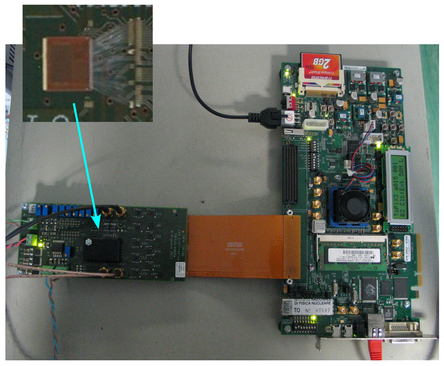

Based on Xilinx Virtex-6 ML605 Evaluation Kit

Remote control via TCP/IP.
Up to 4 boards controlled in parallel by a single PC.

Limited number of external interconnections → *very flexible*

Already used in a beam test at COSY (Jülich) and SPS (CERN)

Beam test preliminary results

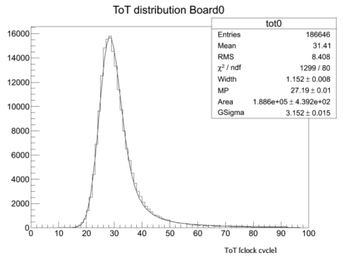

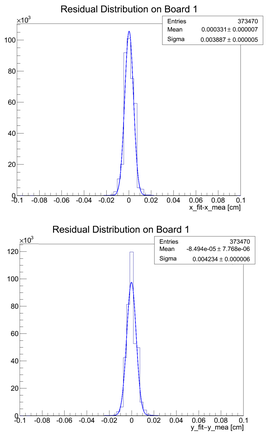

2.7 GeV/c proton beam @ COSY (FZ Jülich)

Tracking resolution 28 µm over 4 planes - obtained with ~20% X/X_0 → *significant improvement expected for the beam test @ CERN*

Beam test setup (pixel + strip)

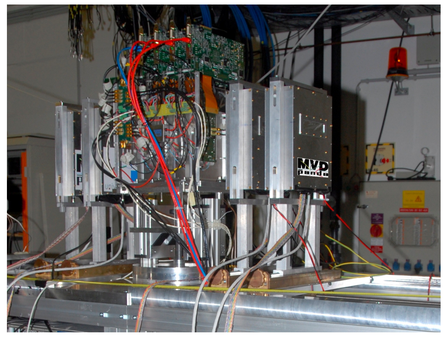

4 pixel planes spaced by 60 mm
640 pixel cells per chip (32×20 matrix)
4 double layer silicon strip sensors (50 µm pitch, 19.2×19.2 mm^2 sensitive area)

D. Calvo[a], P. De Remigis[a], T. Kugathasan[a,b], G. Mazza[a], M. Mignone[a], A. Rivetti[a], L. Toscano[a], R. Wheadon[a]

[a] *INFN sezione di Torino, 10125 Torino, Italy*
[b] *Università di Torino, Dipartimento di Fisica, 10125 Torino, Italy*