Hadronic calorimetry R&D for future PHENIX

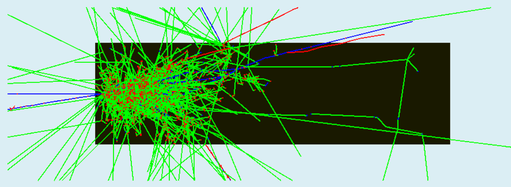

Dmitri Kotchetkov (PHENIX Collaboration)
Department of Physics and Astronomy, Ohio University, Athens, OH 45701

Scintillator tile calorimeters

Being in the second decade of research, the PHENIX experiment intends to expand its physics program; thus consideration of possible upgrades has recently started. Under the proposed upgrade scenario a majority of the existing middle rapidity PHENIX detectors, together with the central magnet, will be removed and replaced by a compact solenoid magnet surrounded by electromagnetic and hadronic calorimeters. The new calorimetry detectors would expand the acceptance of the new PHENIX to a complete azimuth and to a pseudorapidity of $|\eta| < +/ 1.0$. A multiphase detector R&D program has recently commenced with an objective to develop and test inexpensive yet efficient technologies that would optimally fit to the demanded performance of the future PHENIX.

Sampling scintillator tile technology is being considered as one of the choices for the barrel hadronic calorimeter (HCal) to be built. Many accelerator and non-accelerator based detectors have built versions of scintillator tile electromagnetic and hadronic calorimeters. High performance-to-cost ratio makes sampling tile detectors attractive for the experiments. Scintillators in the tile calorimeters are usually based on inexpensive commercially available polymers (like polystyrene or polymethylmethacrylate).

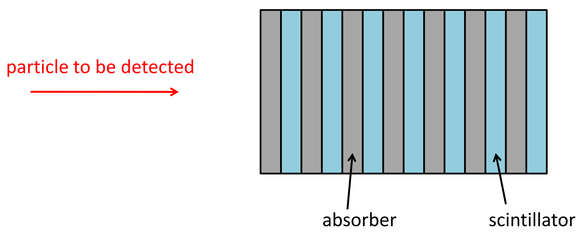

Sampling tile calorimeters are made as stacks of alternating absorber plates and plastic scintillator tiles. Absorbers can be made of steel, lead, copper, uranium and other metals. When a particle hits any material, a multitude of reactions start within like e^+e^- pair production, Compton scattering, photoelectric effect, bremsstrahlung etc. Many particles (mostly electrons, positrons and photons) are produced and then decay. Such a process continues until enough energy remains to produce new particles, the ensemble of which is called "a shower". The production probability depends on the amount of the deposited energy, thus the particles of the shower are mostly produced in the absorber material.

Scintillators are made by embedding molecules of fluors in organic plastics. When a particle of the shower passes through a layer of plastic (e.g. polystyrene), it excites its molecules. Those molecules, in their turn, excite the molecules of the fluor. While coming back to the ground state, the fluor molecules emit the light, which can be collected by fibers. Organic plastics can be made transparent to their own scintillation light. The efficiency of light collection usually improves when the fiber shifts the wavelength of the absorbed light. Such fibers are called wave-length shifting (WLS). The light gets transferred to the photoelectronic devices (photomultiplier tubes, avalanche photodiode, silicon photomultipliers, etc.). Then the integrated charge is electronically formatted into data to be analyzed.

Performance of the scintillator tile calorimeters is estimated by the energy resolution. It is parameterized in the form

$$\frac{\sigma}{E} = \frac{a}{\sqrt{E}} + b, \qquad a = \text{sampling term}, \; b = \text{constant term}.$$

Some hadronic calorimeters built in the past had the parameters of the energy resolution with sampling terms as low as a = 0.3.

Phase 1 R&D toward future PHENIX

The energy resolution of a hadronic calorimeter depends on many factors. If all absorber layers have identical thicknesses and all scintillator layers also have some identical thicknesses, the energy resolution depends 1) on the thickness of the absorber layer, 2) on the ratio of the thickness of the absorber layer to the thickness of the scintillator layer, 3) on the depth of the detector, 4) on the fractional value of the fluors in regard to the amount of a chosen plastic material, 5) on gains of the photoelectronic devices, 6) on surface roughness of the scintillator tiles, and other. The energy resolution of the detector built from absorbers and scintillators of variable thicknesses generally differ from the energy resolution of the calorimeter made of the uniform absorbers and uniform scintillators. Applying offline analysis corrections might help reduce uncertainties in energy measurements; thus measuring the energy in several detector segments along the direction of the developing shower (longitudinal segmentation) might produce results better than just summing the signals from all scintillator tiles into one signal.

Previous studies also found dependence of the energy resolution in hadronic calorimeters on so-called "compensation", which means equivalency of the detector response to electrons to the detector response to hadrons. Usually the compensated HCal achieves better energy resolution.

Phase 1 of the R&D toward developing the future PHENIX hadronic calorimeter has started in early 2011, and during this Phase a **reconfigurable HCal prototype** (which allows modification of thicknesses of absorber layers) is being fabricated. The set of the prototype includes:

1) a box-case made of sheet steel;
2) 380 antimony lead plates, the dimensions of each plate are 350 x 350 x 2 mm^3 (antimony content is ~10%);
3) 210 polystyrene scintillator tiles, the dimensions of each tile are 350 x 350 x 4 mm^3;
4) 14 polystyrene scintillator tiles, the dimensions of each tile are 350 x 350 x 5 mm^3;
5) 232 polystyrene non-scintillator tiles, the dimensions of each tile are 350 x 350 x 2 mm^3.

Thin lead plates allow making absorber layers with thicknesses of 2 mm, 4 mm, 6 mm, …, 12 mm, …, 24 mm, …, 36 mm, …, and so on. Beam test configurations can be chosen with uniform or variable thicknesses of the absorber layers.

Kuraray Y-11 wavelength shifting fiber (diameter = 1.2 mm) is glued with optical cement in the groves made in the scintillator tiles. The depth of groves is such that the center of the fiber's cross-section is located at the depth of 2 mm in 4 mm thick tile or at the depth of 2.5 mm in 5 mm thick tile.

For the beam tests the HCal stack is assembled from lead plates and 4 mm thick scintillator tiles. Fourteen tiles with thicknesses of 5 mm are to be attached on sides of the box-case to study side leaks of the showers developed in the prototype. Non-scintillator tiles are used to study effects of insertion of such tiles in the stack; using thin non-scintillator tiles might help in mechanical realization of the real HCal (e.g. the scintillator tiles can be sandwiched between non-active non-scintillator tiles).

Prototype design and production

The HCal prototype is being fabricated at Joint-Stock Company "Uniplast" in Vladimir, Russia. The company has a long history of development and production of calorimetry detectors. Some of the hardware produced and delivered by "Uniplast" includes

- lead-scintillator modules for the HERA-B, LHCb, AGS E949 electromagnetic calorimeters;
- scintillator tiles for the STAR electromagnetic calorimeters;
- scintillator tiles for the ALICE electromagnetic calorimeter;
- scintillator counters for the T2K detector;
- scintillator tiles for the CALICE analog hadronic calorimeter prototype;
- lead-scintillator accordion electromagnetic calorimeter prototype.

The box-case is assembled from steel components. The support of the box-case is made of 30 mm thick steel sheet with one I-beam welded in the center of the sheet along its length and twelve C-beams welded on the edges of the sheet (per six C-beams on each side). Two frames made from 50 mm thick steel sheets with milled windows are attached to the support's front and rear ends. Two side walls made of 20 mm thick steel sheets are attached to the frames and to the C-beams. Since the components of the box-case are heavy, to ease the alignment of the walls in regard to the C-beams during the box-case assembly, steel parallelepiped steps (with cross-sections of 20 x 30 mm^2) are welded to the C-beams. The walls, before being fixed to the C-beams, are placed on the steps. The holes in the box-case do not have threads, and the assembly of the box-case is done using M16 bolts and nuts (replaceable, if necessary, by 5/8" size). Each side wall has milled slots, running with a step of 120 mm along the length of the wall. Such slots allow fixing the stack of absorbers and scintillators inside the box-case for a certain chosen overall thickness of the stack. Each side wall also has two rows of smaller drilled holes, running with a step of 90 mm. Those holes are for attachment of 5 mm thick scintillator tiles to the walls (e.g. using cork plugs) from outside when lateral shower leaks are to be studied. The stack of absorbers and scintillators is hold in the box-case using an internal frame welded from steel angles. The frame is placed in the specific position in the box-case by bolts that pass through the slots in the side walls and through the holes made in the internal frame.

Front view of the support base:

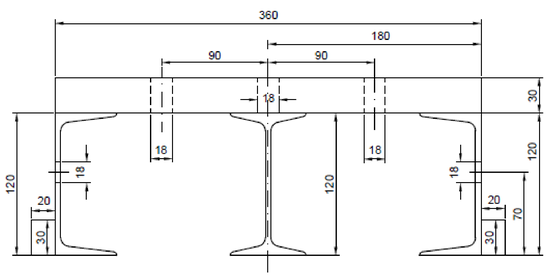

Slots in the side wall:

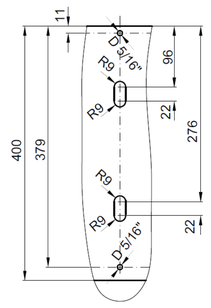

Front view of the support frame:

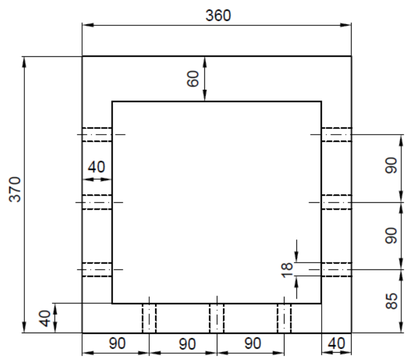

Front view of the internal frame:

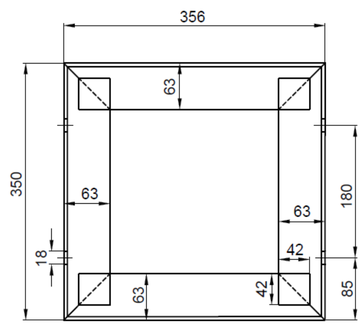

Front view of the assembled box-case:

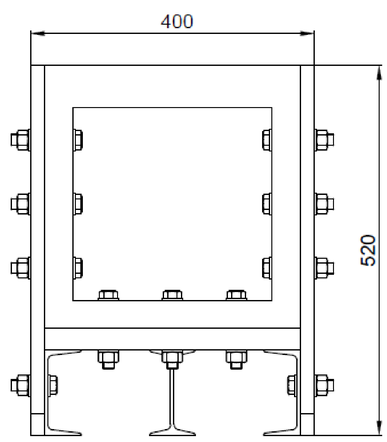

Side view of the internal frame:

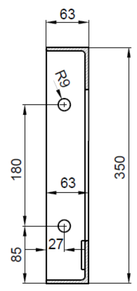

Side view of the assembled box-case:

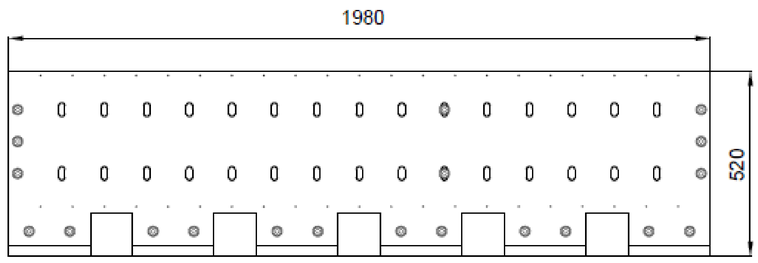

The test beam data is to be taken with lead plates and plastic tiles standing on their edges in the box-case; the large surfaces of the plates and tiles are supposed to be orthogonal to the direction of the beam. The light gets collected from top of the prototype.

Machining the side wall

Test assembly of the box-case (I-beams, C-beams and steps are not welded yet)

The 4 mm thick scintillator tiles are made of 2 types (105 pieces of each type). Types 1 and 2 are symmetric to each other. The lead-scintillator stack can be made when only a single lead plate separates two closest scintillator tiles. To avoid mechanical interference of the fibers that collect the light from two ends of the embedded WLS fiber, the stack is made as
Type 1 tile : Absorber : Type 2 tile : Absorber : Type 1 tile : Absorber : Type 2 tile : etc.

Type 1 tile:

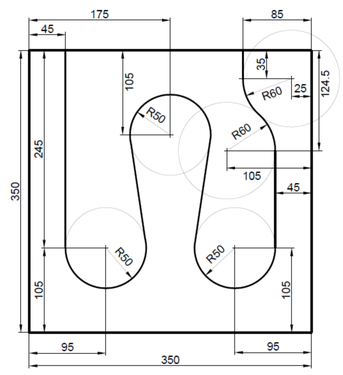

Type 2 tile:

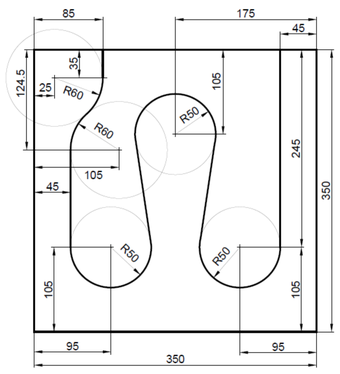

Placement of WLS fiber in the groove made in the scintillator tile

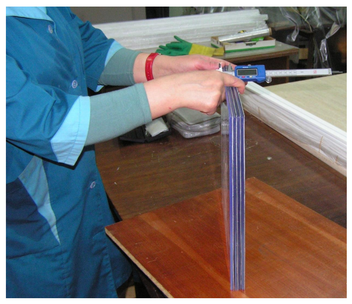

Quality assurance thickness measurement; the stack is made of four scintillator tiles and four lead plates

Geant4 simulations

A variety of the HCal configurations will be tested with pion and electron beams (see similar studies in [2]). Some of the controls of the experiment include 1) thicknesses of the absorber layers, 2) uniformity of the thicknesses of the absorbers, 3) depth of the HCal, 4) longitudinal segmentation of the light readout. Simulation will not serve as an input to the experiment. However, it will be worth to compare the test beam results with simulated prototype configurations. In the following example simulated π^+ beam energies are 1, 2, 4, 8, and 16 GeV. Only the energy that gets deposited in scintillator tiles is calculated and analyzed. Variables: 1) thickness of an individual absorber layer, 2) number of Pb and scintillator layers, 3) beam energy.

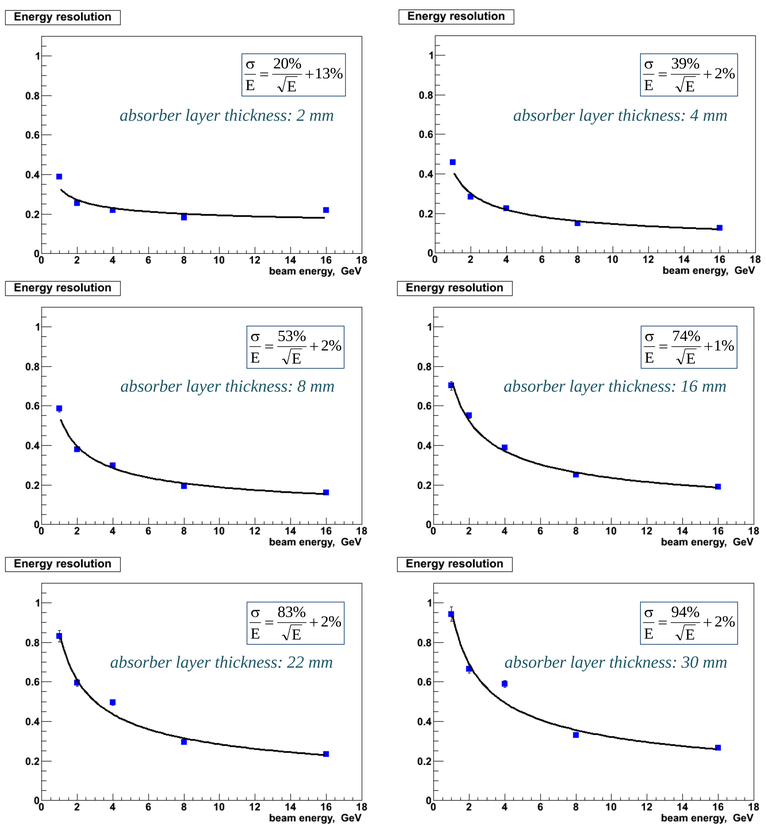

[1] T. C. Awes et al., Nucl. Instr. and Meth. A279 (1989) 479-502
[2] T. Suzuki et al., Nucl. Instr. and Meth. A432 (1999) 48-65