High Luminosity LHC

LHC-4R crab cavity

B Hall
Lancaster University / Cockcroft Institute

The HiLumi LHC Design Study (a sub-system of HL-LHC) is co-funded by the European Commission within the Framework Programme 7 Capacities Specific Programme, Grant Agreement 284404.

Cavity Design Team

- G. Burt (CI-Lancs)
- B. Hall (CI-Lancs)
- C. Lingwood (CI-Lancs)
- D. Doherty (CI-Lancs)
- A. Dexter (CI-Lancs)
- P. Ambattu (CI-Lancs)

- C. Hill (STFC)
- P. McIntosh (STFC)

- H. Wang (JLab)
- B. Rimmer (JLab)
- L. Turlington (Jlab)

- Peter Stoltz (TechX)
- David Smithe (TechX)

- Rama Calaga (CERN)
- Erk Jensen (CERN)
- + several others on SM18 testing

The Cockcroft Institute of Accelerator Science and Technology

Science & Technology Facilities Council

Jefferson Lab

EuCARD

TECH X

High Luminosity LHC

Cavity Shape

- Cavity fitted LHC scenario (84 mm aperture compact transverse size) and has tolerable fields at the design gradient.
- Removal of voltage variation.

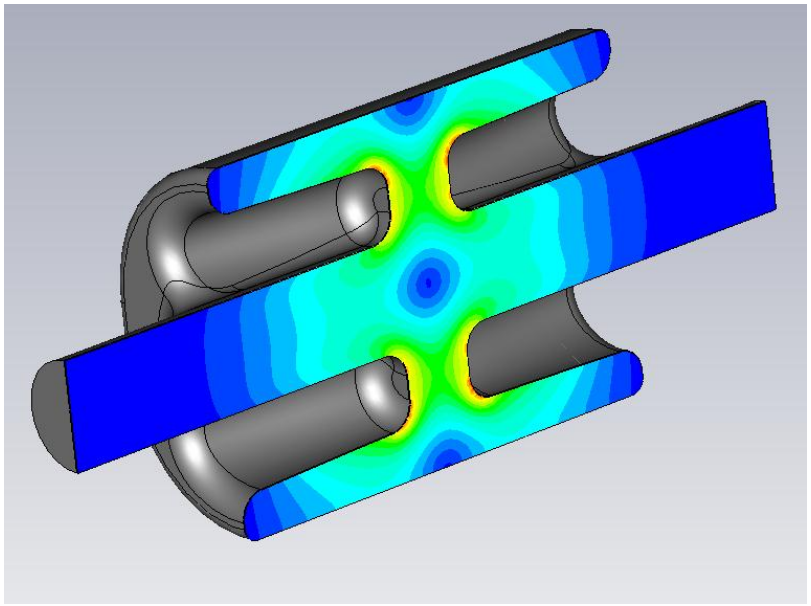

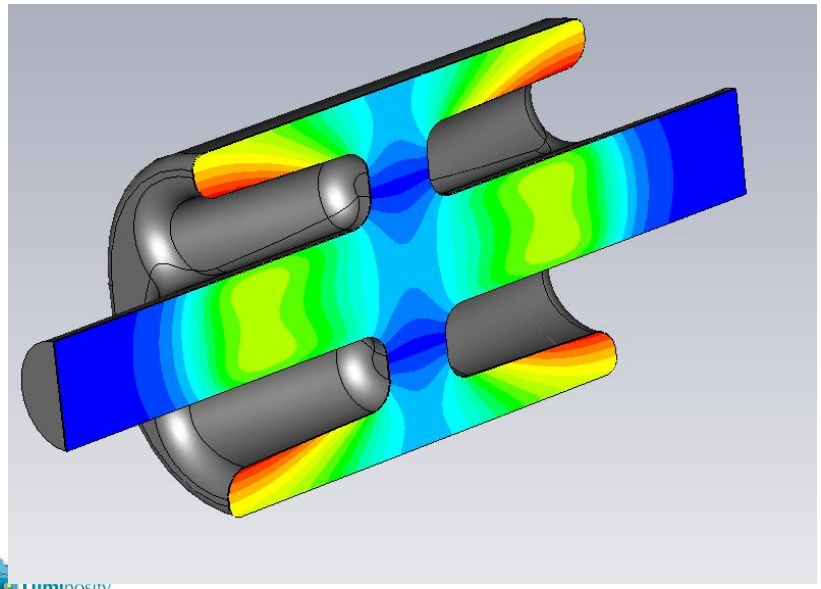

Emax @3MV	29.5 MV/m
Bmax @3MV	59.5 mT
Transverse R/Q	915 Ohms

$R_T/Q=(V(a)^2/wU)*(c/\omega a)^2$

Sextupole Component

- Due to symmetry the 4R cavity doesn't have even components to the crab kick (monopole, quadrupole, octopole etc)
- The dominant error term comes from the sextupole component (m=3).
- The m=3 term of a simplified shape was studied.
- It can be seen that the m=3 term can be reduced to zero by simply modifying the angle of the focusing electrodes

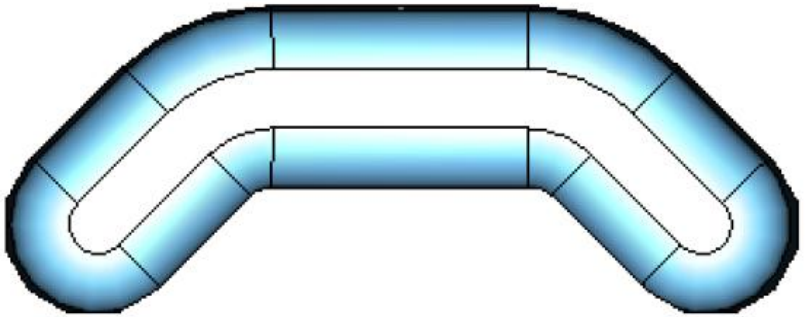

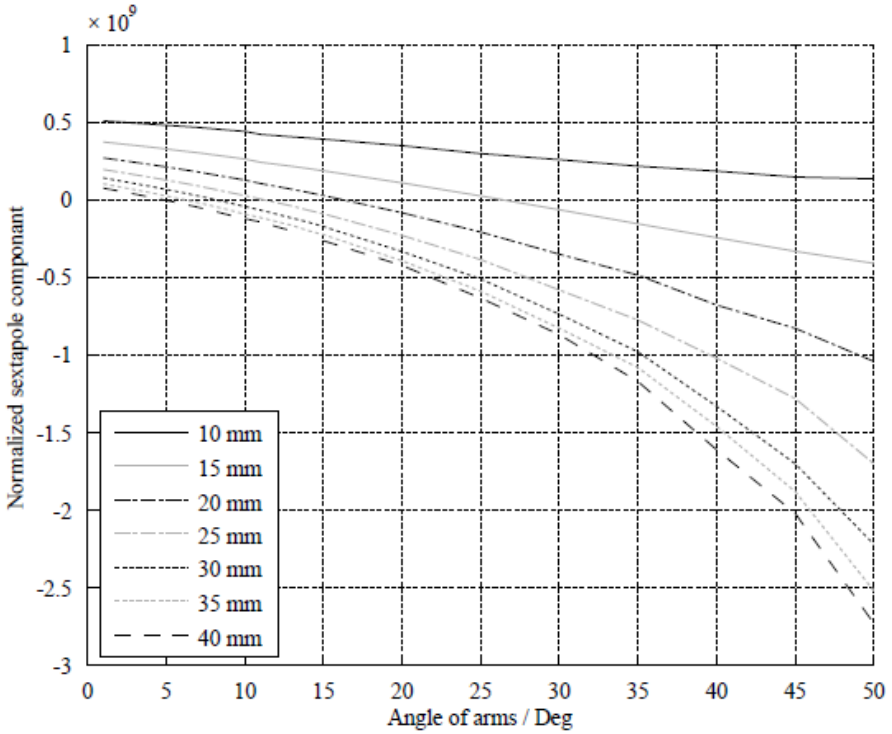

High Luminosity LHC

Aluminium cavity

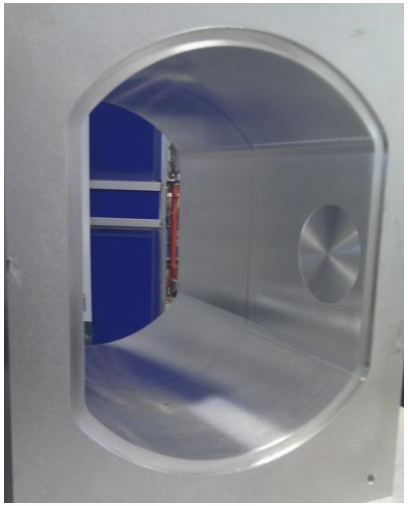

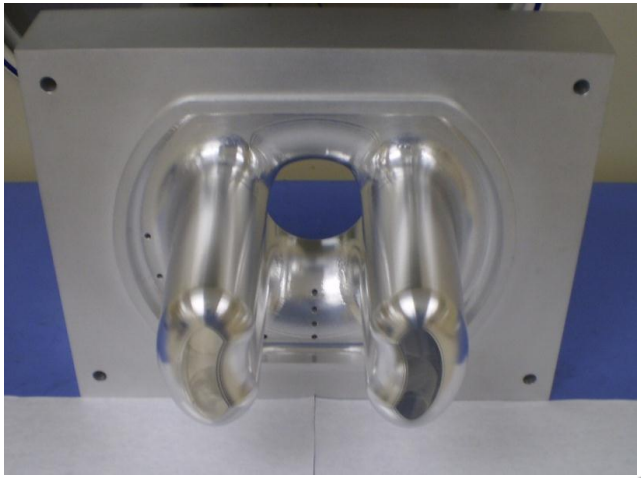

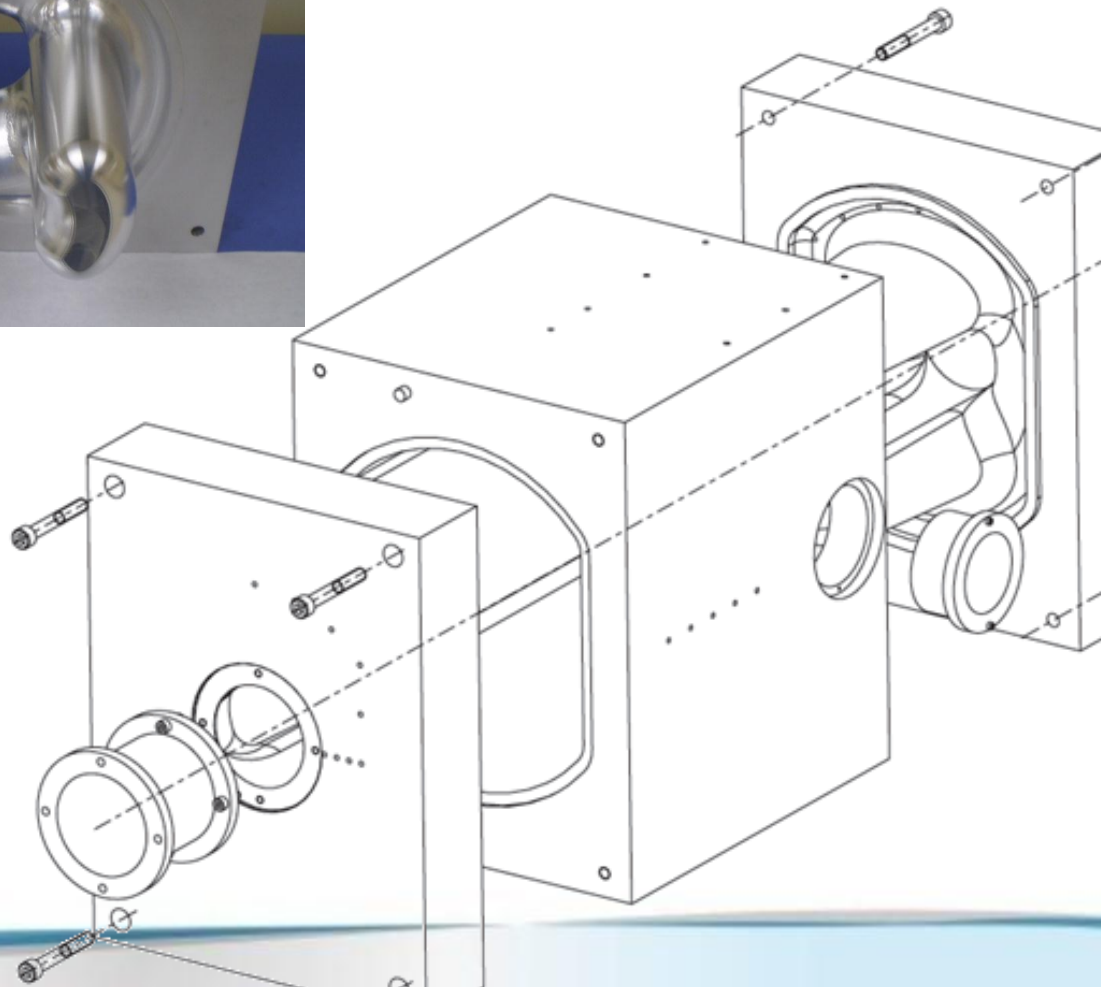

Initial Problems

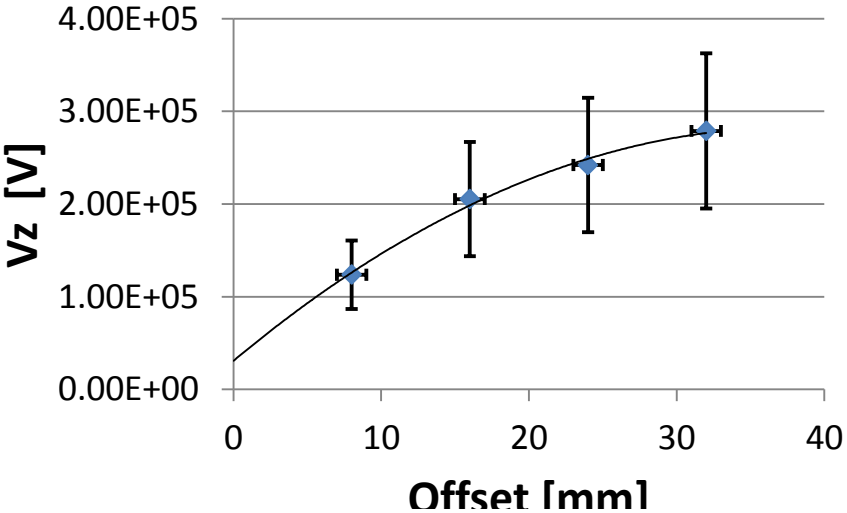

- Initial results were not linear.
- A study of the error terms showed there was still a significant perturbation from the transverse fields despite using a long thin needle.

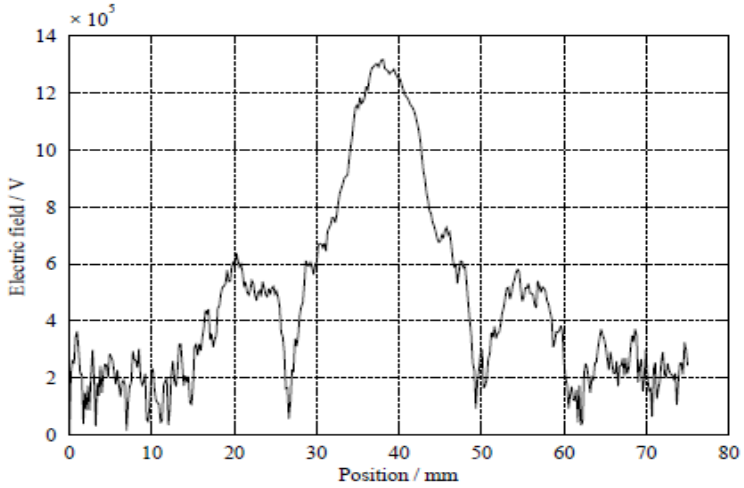

Off axis measurement

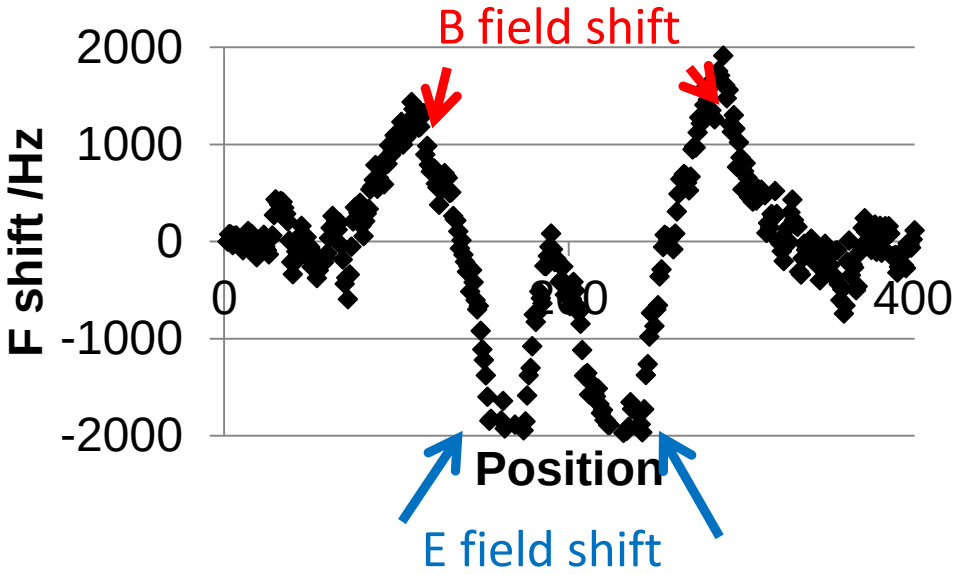

On axis measurement

High Luminosity LHC

Corrections

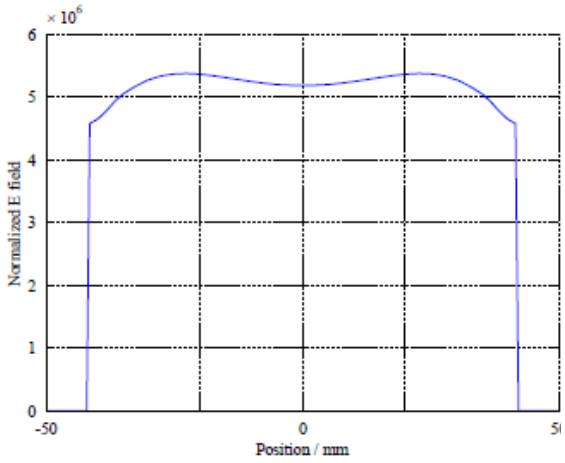

Et

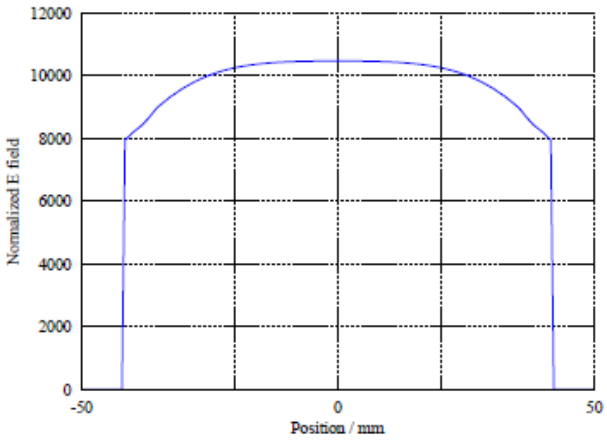

Ht

- The transverse fields are pretty constant across the aperture hence we can do an on axis measurement and subtract it from the off axis measurement.

$$\Delta f \propto f_1 E_z^2 + \left(f_2 \left(E_t^2 - E_{t0}^2 \right) - f_4 \left(B_\phi^2 - B_{\phi 0}^2 \right) \right)$$

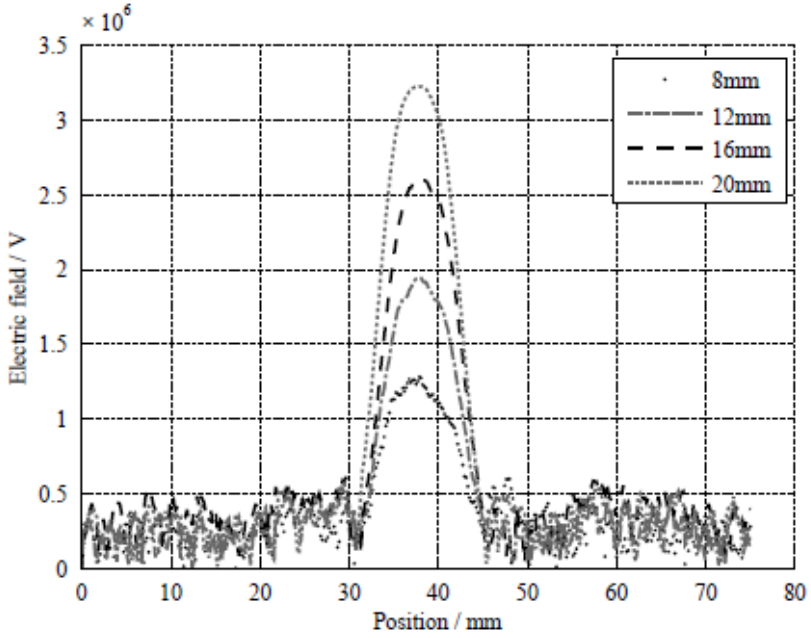

Bead pull results

- Measurements are fairly linear but have error bars of 8%.
- Error bars are due to a low signal to noise ratio and a drift in the Q during measurements.
- The measurements are now being retaken with a higher power and checking the Q for every measurement

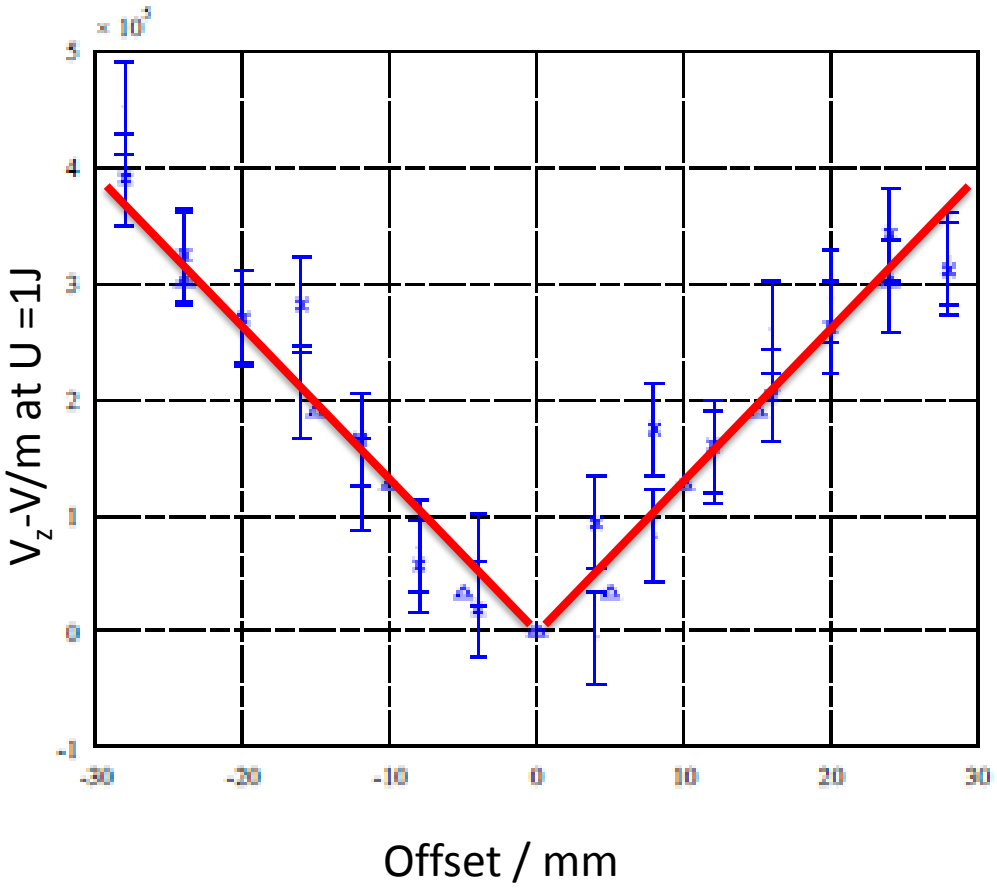

Outer can stability

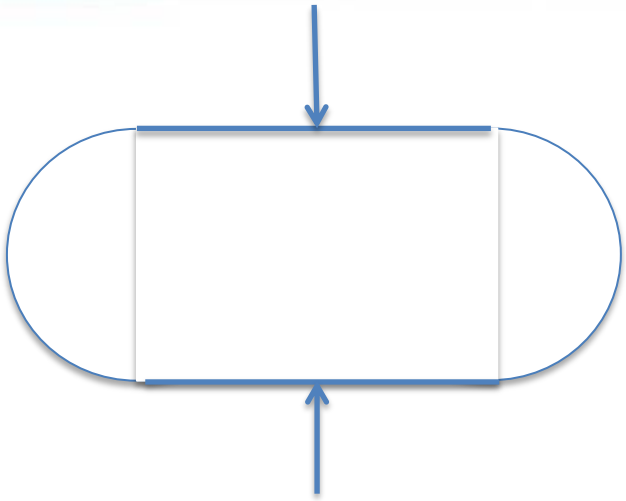

- Although the frequency is stable with pressure the stress on the outer can when evacuated is too high.
- This is due to the flats on the sides of the can.
- The outer can is now being altered to provide more mechanical strength.
- Prototype has stiffening ribs

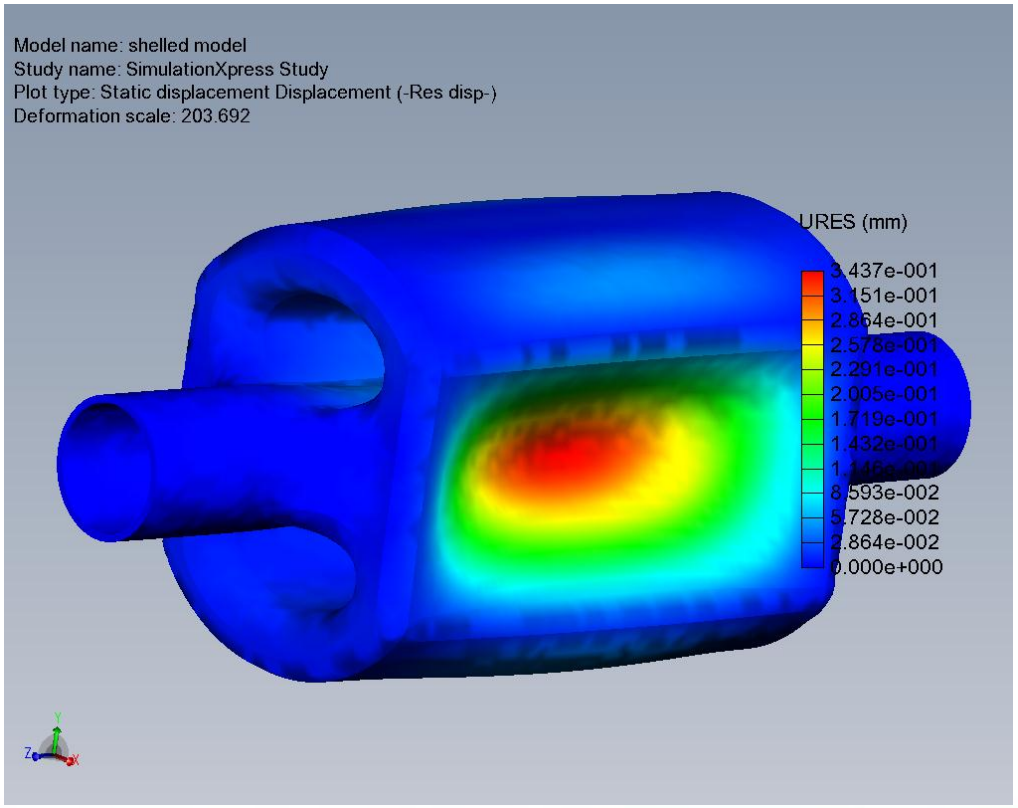

High Luminosity LHC

Higher Order Modes

- We have some TEM HOMs and a LOM.
- As the cavity is compact in the vertical plane most of the TM modes are at higher frequencies, and the TE modes have low shunt impedances hence has less dangerous HOMs .

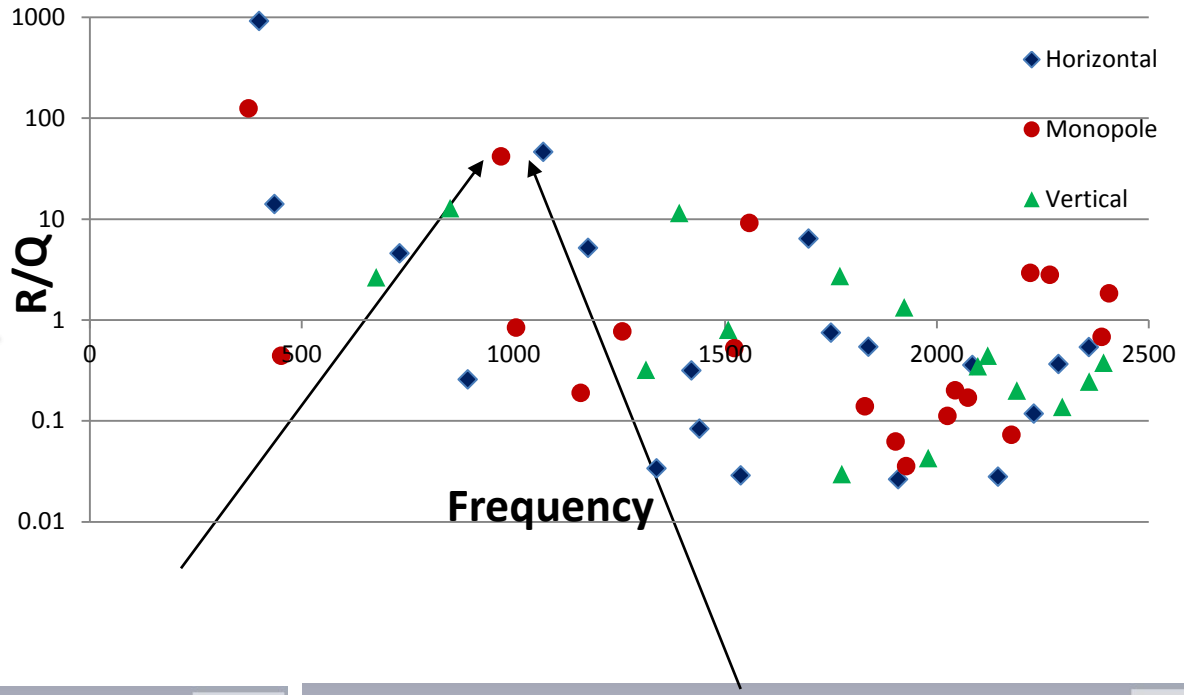

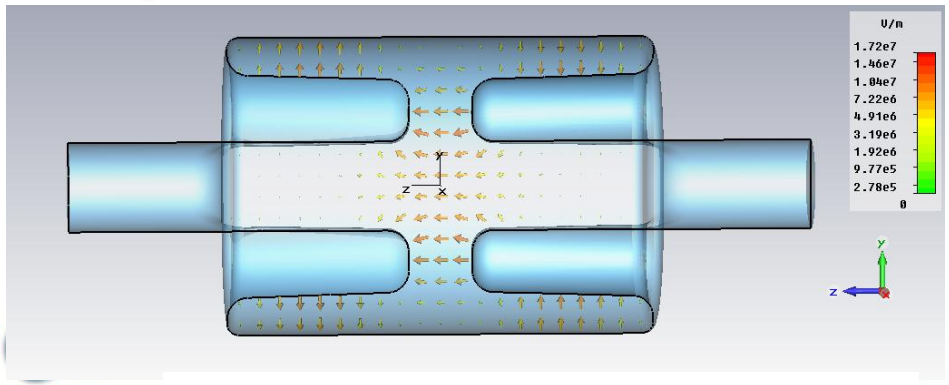

Monopole 3π/4 resonator

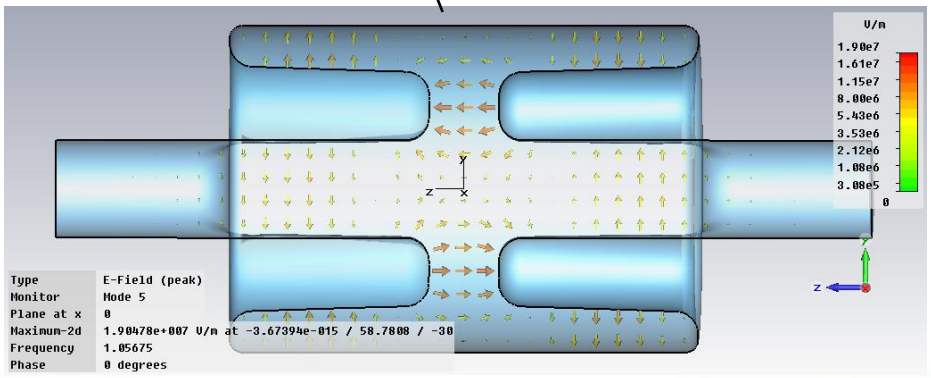

Dipole 3π/4 resonator

Input and LOM Couplers

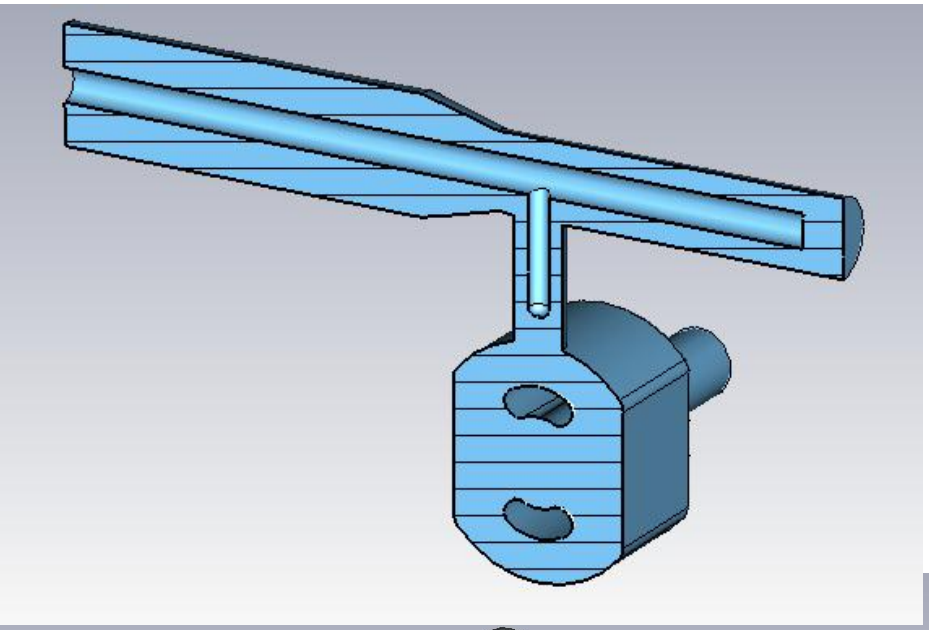

- Couplers have been developed for the LHC crab.
- Input coupler interfaces with existing LHC coupler
- LOM coupler reaches a low Q (100) and must handle 6 kW.
- Couplers are attached to the cavity body and demountable to aid cleaning.

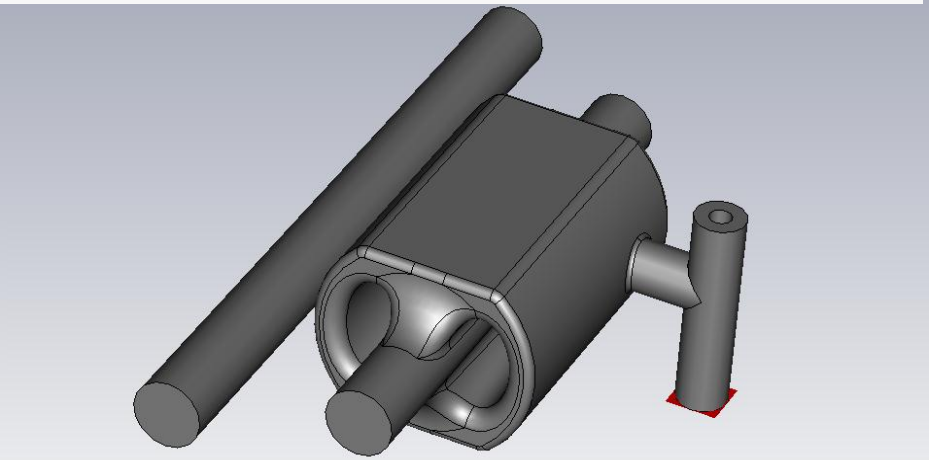

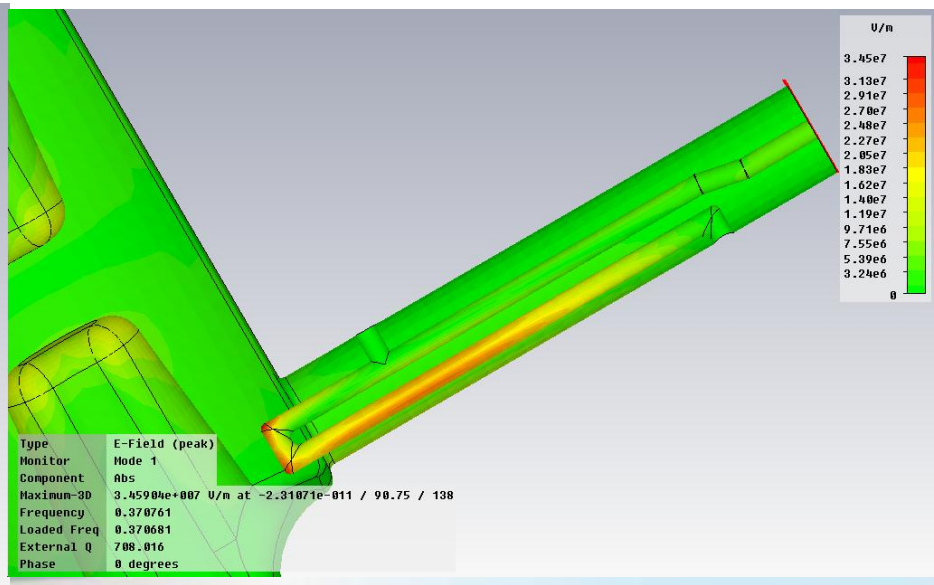

Crab Cavity HOM Coupler

- Broadband HOM coupler needed
- Located opposite LOM coupler
- Needs to be asymmetric to couple to horizontal modes as well.

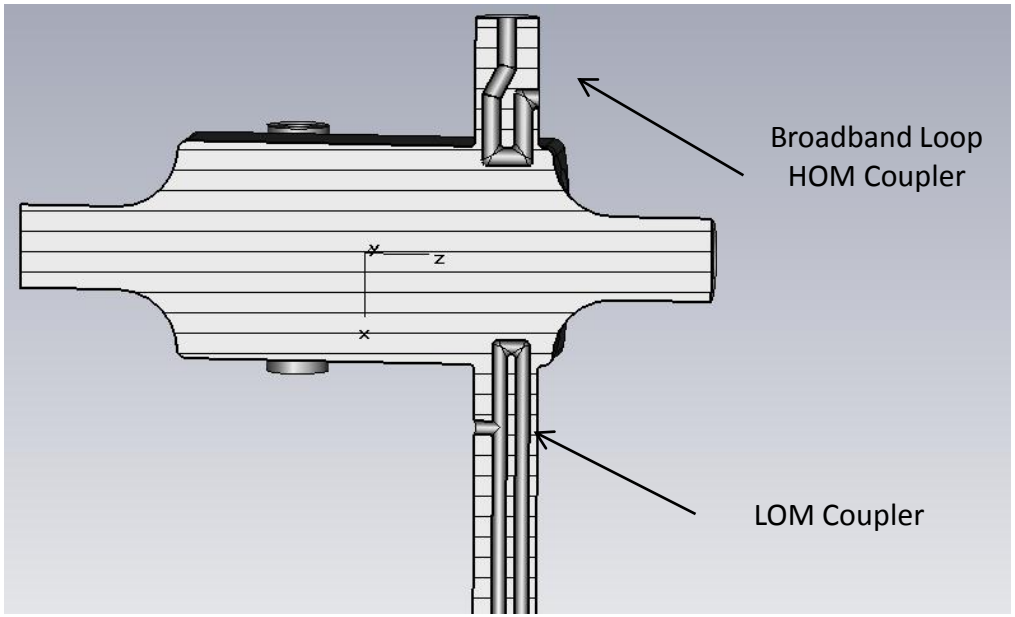

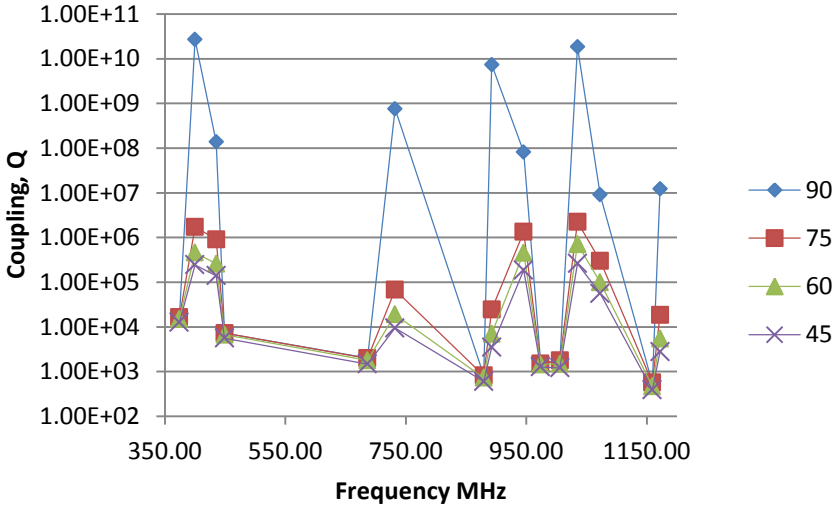

- Preliminary rotation of coupler

Multipactor

- Multipactor on the beam pipe was found on the beam pipe at ~2MVT.
- Same multipacting was seen on KEKB crab cavity.
- Methods of removing the multipactor are being looked into;

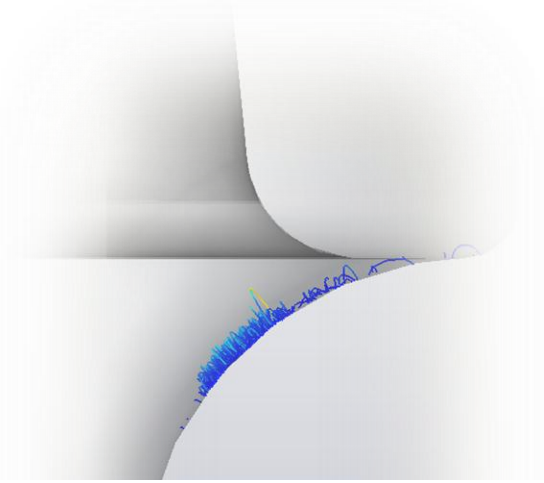

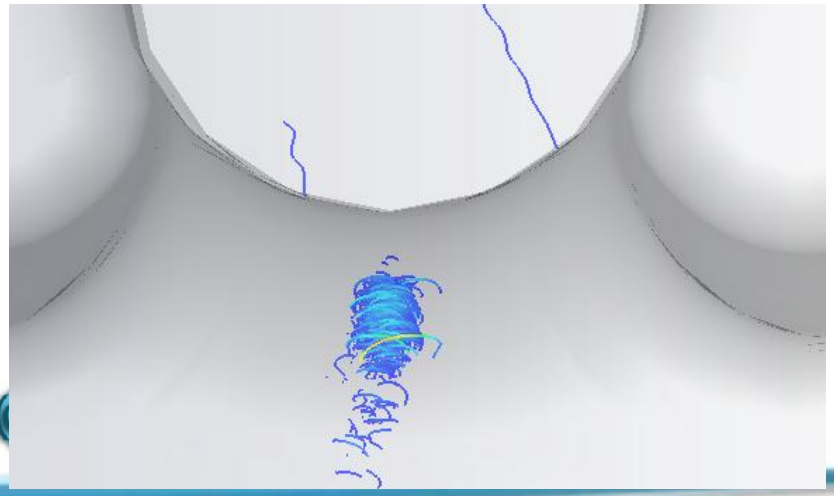

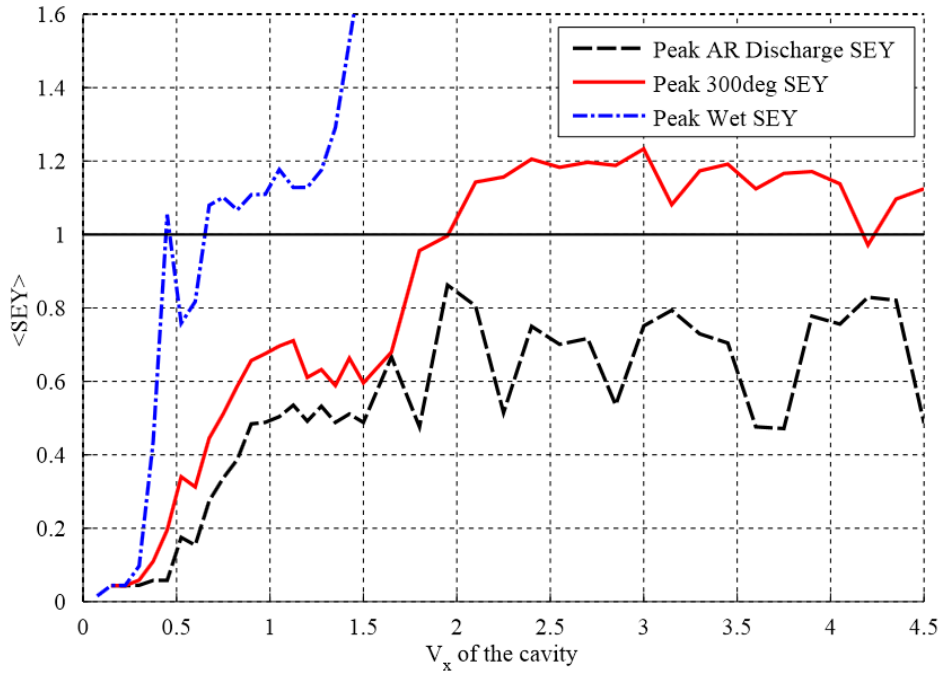

Nb Cavity

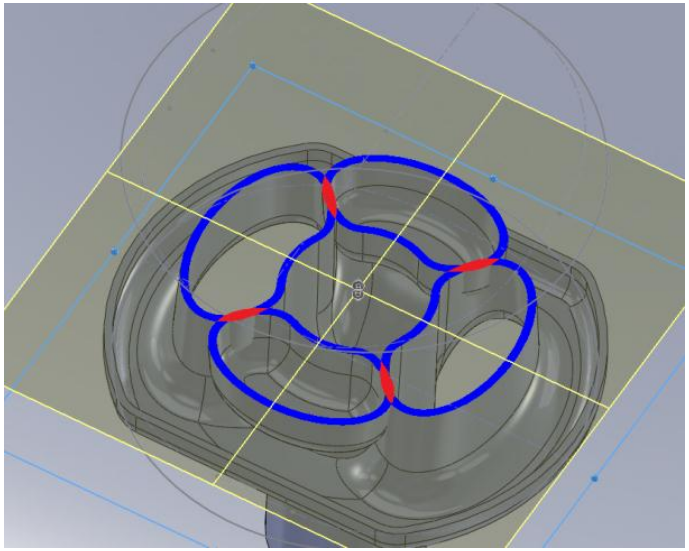

- End plates from solid ingot
  - Wire EDM pre-forms from ingot
  - Machine all surfaces
  - Add beam pipes and can

- Rod profile was altered slightly to allow both end plates to be wire etched from single niobium block.

Parameters after EB welding

- Below is design and measured (at room temperature) data before and after the final EB welding of the cavity.

Mode	f_des (MHz)	f_meas1 (MHz)	Q _meas1 (300K)	f_meas2 (MHz)	Q _meas2 (300K)
1 – LOM	373.941	374.015	1340	373.631	3593
2 – Operation	399.873	400.032	1440	399.557	3324
3 – 1st HOM	435.397	434.175	1310	434.620	988
4 – 2nd HOM	449.055	444.534	1116	446.341	3200

Courtesy of Niowave

Tests at CERN SM18 next week

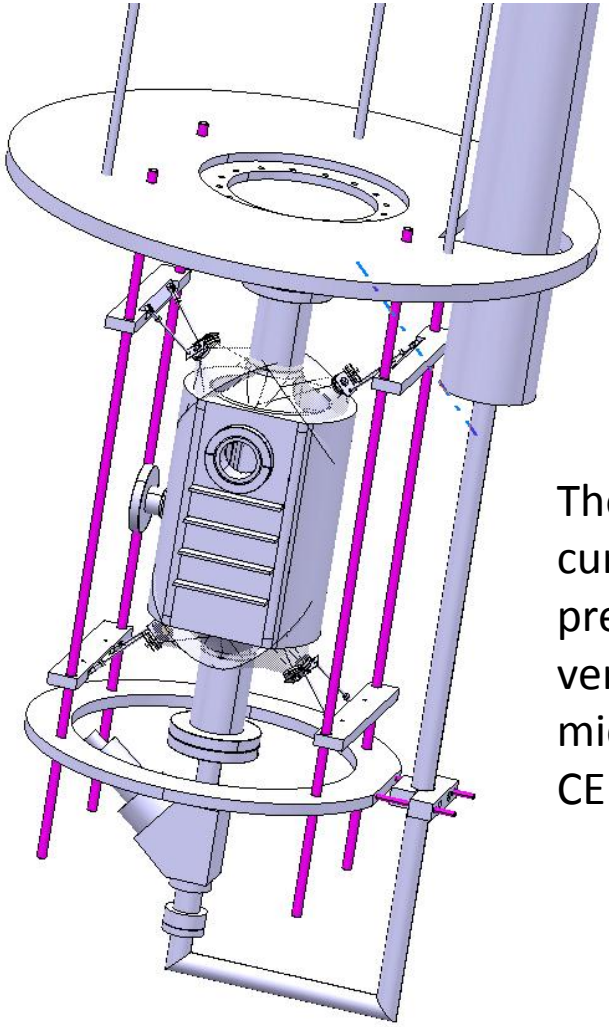

The cavity is currently being prepared for vertical testing mid-November at CERN in SM18.

Conclusion

- Further validation of aluminium design ongoing
- Need to reduce errors in the beadpull to verify field linearity to 2% level.
- Initial vertical testing will take place at CERN in the week beginning Nov 19, cavity will only have basic cleaning.
- The cavity will then be cleaned and baked for further testing in early 2013.
- LOM and HOM coupler will be further developed, including EM design, multipactor studies, thermal management and integration into the cryostat.
- Outer can needs modified to improve strength.
- Need to decide how to tune the cavity and start work on a tuner.