High Luminosity LHC

# Status and prospective of cryogenics for cold-powering systems at LHC P7, P1 and P5

R. van Weelderen and U. Wagner
CERN

The HiLumi LHC Design Study is included in the High Luminosity LHC project and is partly funded by the European Commission within the Framework Programme 7 Capacities Specific Programme, Grant Agreement 284404.

# Cold powering systems

- Foreseen at LHC Points 1 and 5
  - Replacement of ARC and IT current feed boxes from LHC tunnel to surface building.
    - Arc: ~ 220 kA total current;
    - IT: ~ 100 kA total current
    - ~ 400 m SC link line incl. ~100 m vertical shaft
- Foreseen at LHC point 7
  - Replacement of ARC current feed boxes from LHC tunnel to distant underground cavern.
    - ~ 32 kA total current; ~ 500 m “semi horizontal” SC link line.
- For each point:
  - A new cryostat must be integrated in the tunnel for the energy extraction and the connection between magnet LTS and link.

# Locations I: P7

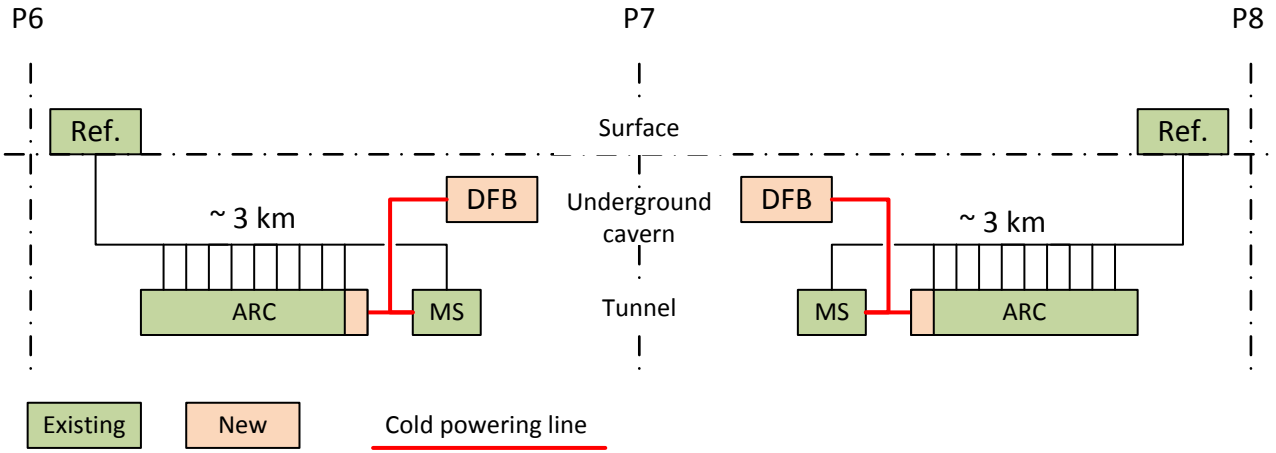


- New current feed box (DFB) to be placed in distant underground cavern
- Cryogenic supply from existing refrigerators at P6 and P8
- Available fluids for cooling defined by existing infrastructure

# Locations II: P1 and P5

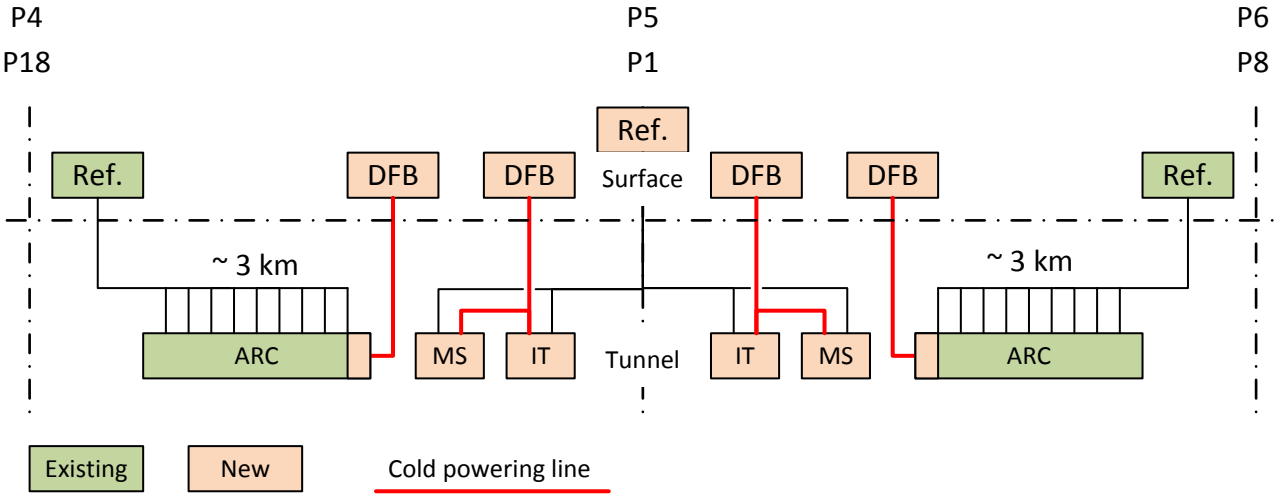


- New current feed boxes (DFB) to be placed on surface level
- Cryogenic supply possible:
  - From existing refrigerators at P18, P4, P6 and P8
  - From new refrigerator at P1 and P5
- Available fluids for cooling defined only for the existing infrastructure
- Liberty to define new refrigerator according to needs

# Locations II: P1 and P5 (continued)

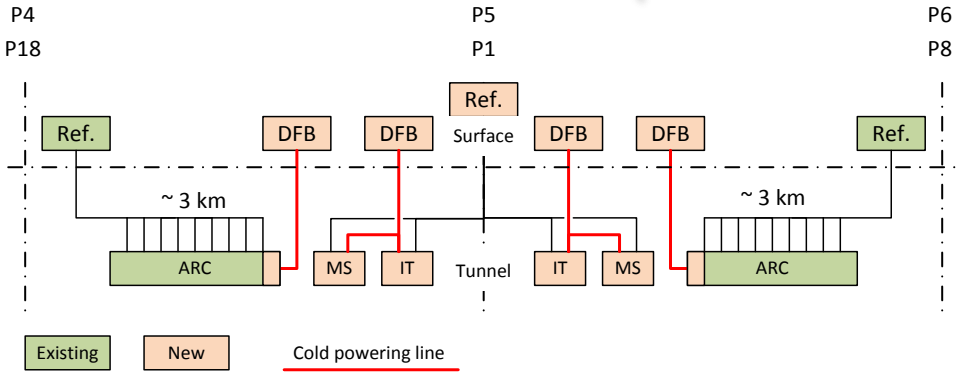


- In principle three possibilities for cooling of the cold powering line (link) and DFB.
  - All from existing refrigerators
  - All from new refrigerator
  - Part from new, part from old
- Probable solution (to allow separation of ARC and LSS cryogenics) :
  - DFB / link for arc supplied by the existing refrigerators
  - DFB / link for new magnets supplied by the new refrigerator
- Please refer to the presentation of L. Tavian (plenary on 16 Nov.)

# Assumptions as of today

- Link SC is $MgB_2$
- Splice LTS to $MgB_2$ (magnet to link) requires liquid helium bath.
- Max $MgB_2$ temperature 20K
  - Max. helium temperature 17 K
- He consumption for current lead cooling: 0.06 g/s per kA

# Conclusions from 2011 presentation

- Two cases can be distinguished
- High current case P1 and P5
  - The cooling for the current lead defines the helium flow.
  - Heat load on transfer lines of second order.
  - Invest design effort to obtain a current lead with low coolant consumption.
- Low current case
  - Heat load on transfer lines defines the cooling flow.
  - Flow in excess for current lead cooling is heated to ambient. (“wasted”)
  - Invest design effort to obtain a transfer line with low heat leak.
    - Complex custom design transfer line
    - Shield circuit using 60 K, 18 bar gas (as already realised for existing 520 m long link in P3)*

* see “OPERATIONAL EXPERIENCE WITH THE LHC SUPERCONDUCTING LINKS AND EVALUATION OF POSSIBLE CRYOGENIC SCHEMES FOR FUTURE REMOTE POWERING OF SUPERCONDUCTING MAGNETS” A. Perin, R. van Weelderen, S. Claudet, IPAC 2010

# Transfer line options

- “Nexans like” (semi rigid) transfer line
  - Advantage: easier to install.
  - Disadvantage: high heat load.
    - Relevant for “low current cases”.
- Custom build rigid transfer line
  - Advantage: low heat load.
  - Disadvantage: Installation time consuming; space requirement for installation.

# High and low current case

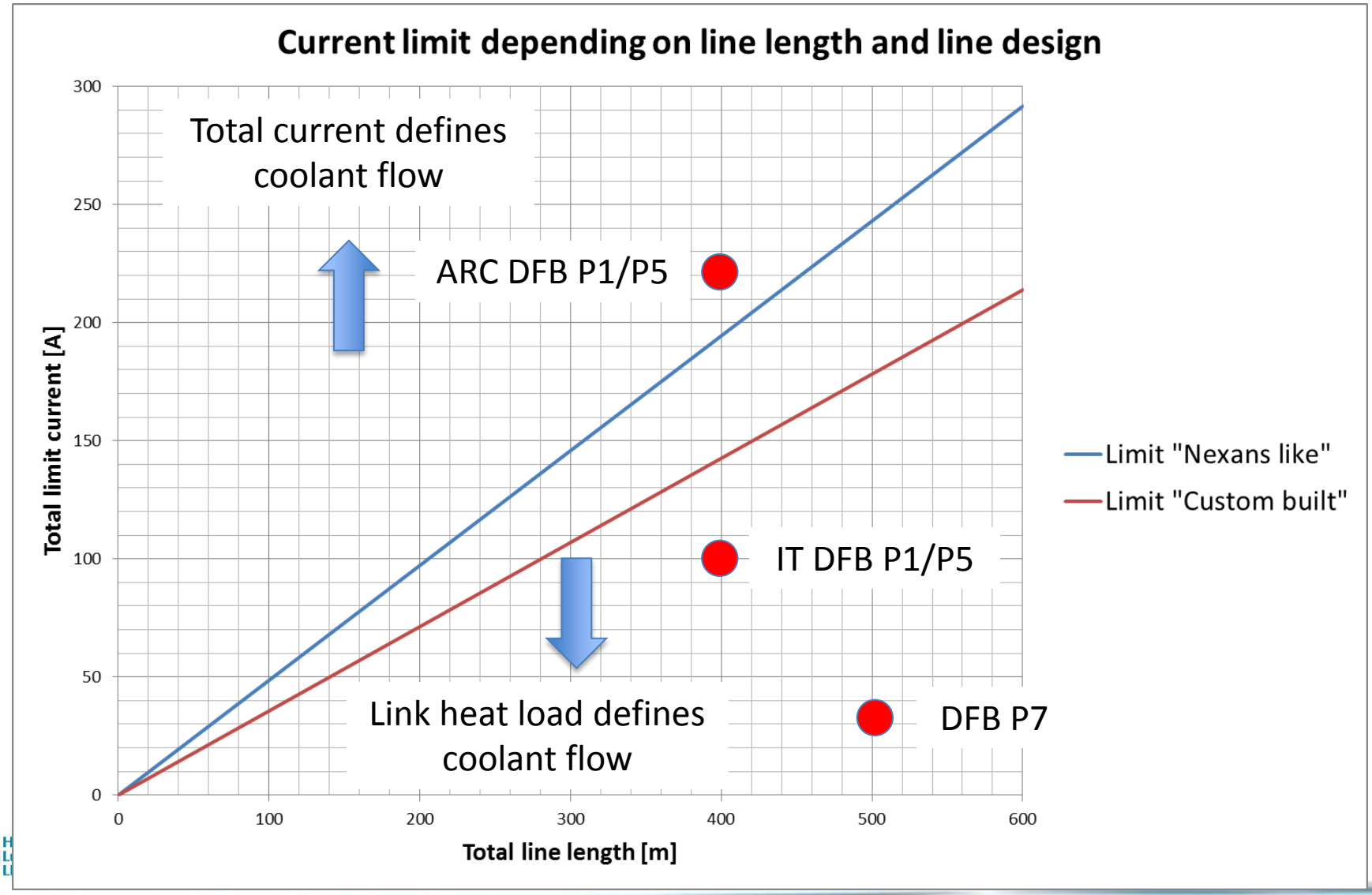

# Current situation

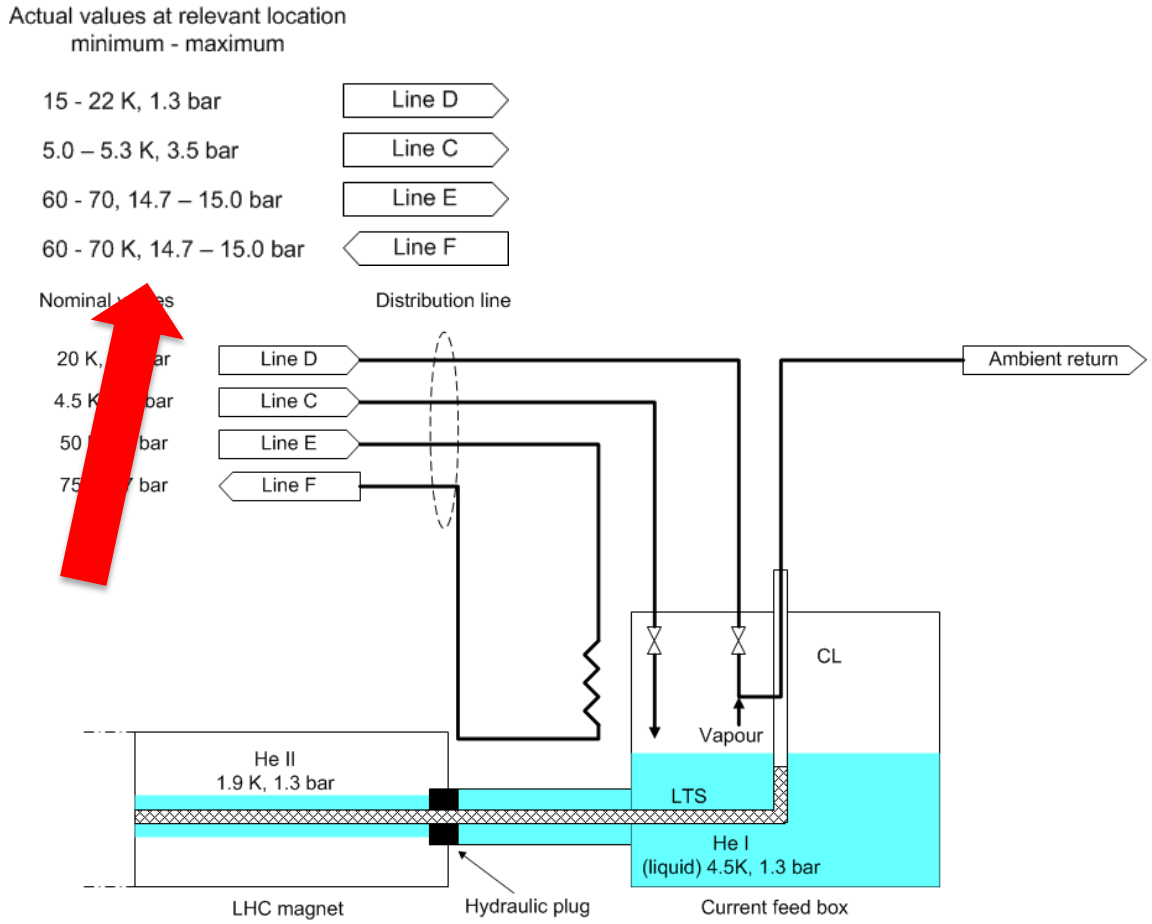


- DFB in the LHC tunnel
- Cooling:
  - LTS with 4.5 K 2-phase helium
  - Lead with 20 K gas helium

# Current Base concept (all sites)

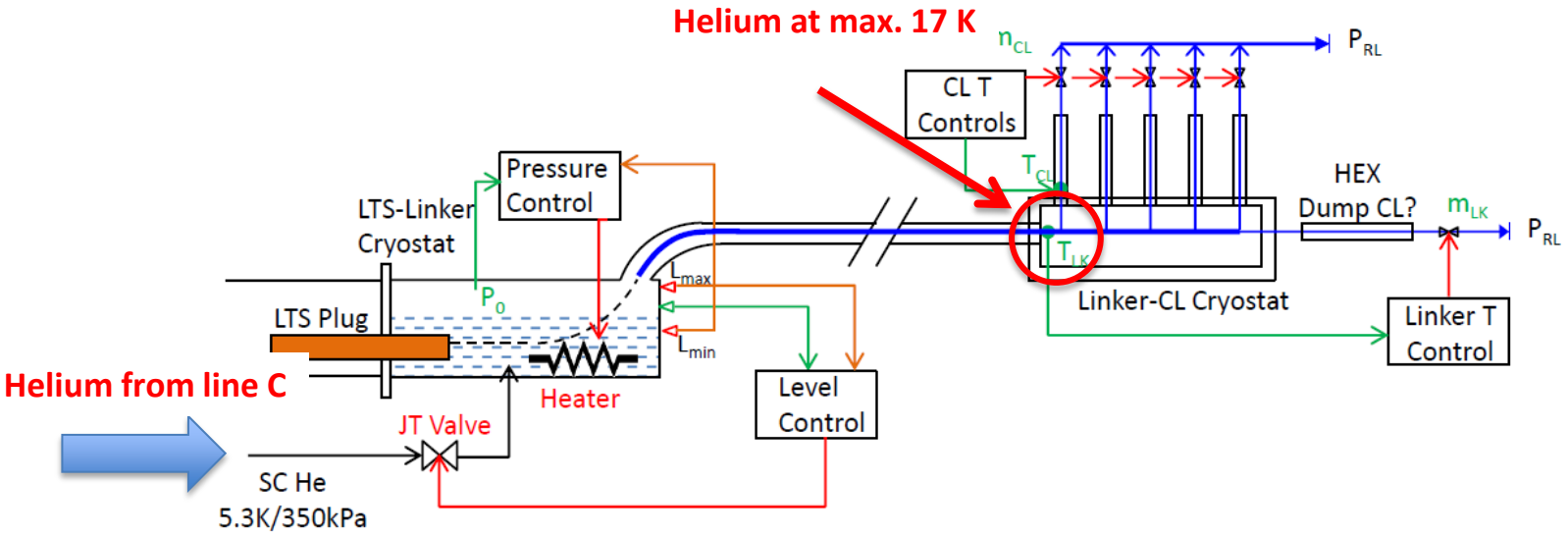


- The (assumed) 17 K limit for the MgB2 link allows only the 5 K, 3.5 bar helium from line C as coolant.
- The link will be cooled by helium gas created by evaporating the liquid helium in the spice box.
- Thermal shield solution not shown.

# Cooling capacity

- The relocated current feed boxes with superconducting link will charge the refrigeration system more than the currently existing feed boxes.
- The cooling of the link is not for free.
- The existing refrigerators have sufficient margin in the respective temperature range to cover this additional load. (Without proof here, but see L. Tavian's plenary on 16 Nov)
- The new refrigerators can be designed as necessary.
- We are certain we can supply the cooling for the relocated current feed boxes.

# Cost of cooling for the existing refrigerators

- The additional cost of cooling is for all points:
  - About 2.0 g/s from 4.5 K, 3.5 bar to 20 K, 1.3 bar
  - Equivalent to about 220 W between 4.5 K and 20 K

# Uncertainties as of today

- $MgB_2$ performance and detailed requirements.
- Lead performance and detailed requirements.
- Transfer line design (link cryostat)

# Conclusion

- We are certain that we can supply the cooling for the current feed boxes and the corresponding superconducting link.
- We do not know precisely what and how we will cool.
- In short
  - We do not know what we will do, but we know we can do it.