Recent results on the development of a proton Computed Tomography system

The PRIMA Collaboration (now RDH)

M. Bruzzi[1,2], M. Bucciolini[2,3], M. Carpinelli[4,5], G. A. P. Cirrone[6], **C. Civinini[2]**, G. Cuttone[6], D. Lo Presti[7,8], S. Pallotta[2,3], C. Pugliatti[7,8], N. Randazzo[7], F. Romano[6,9], M. Scaringella[1], V. Sipala[4,5], C. Stancampiano[7,8], C. Talamonti[2,3], E. Vanzi[10], M. Zani[2,3]

[1]Energetics Departments, University of Florence, Florence, Italy
[2]INFN - Florence, Florence, Italy
[3]Department of biomedical, experimental and clinical sciences , University of Florence, Florence, Italy
[4]Chemistry and Pharmacy Department, University of Sassari, Sassari, Italy
[5]INFN Cagliari, Cagliari, Italy
[6]INFN - Laboratori Nazionali del Sud, Catania, Italy
[7]INFN - Catania, Catania, Italy
[8]Physics Department, University of Catania, Catania, Italy
[9]Centro Studi e Ricerche e Museo Storico della Fisica, Rome, Italy
[10] SOD Fisica Medica, Azienda Ospedaliero-Universitaria Careggi, Firenze, Italy

Vienna Conference on Instrumentation – VCI-2013 - Vienna

Proton Radiotherapy

First proposed by R.R. Wilson in 1946
"Radiological Use of Fast Protons",
Radiology, 47:487-491 (1946)

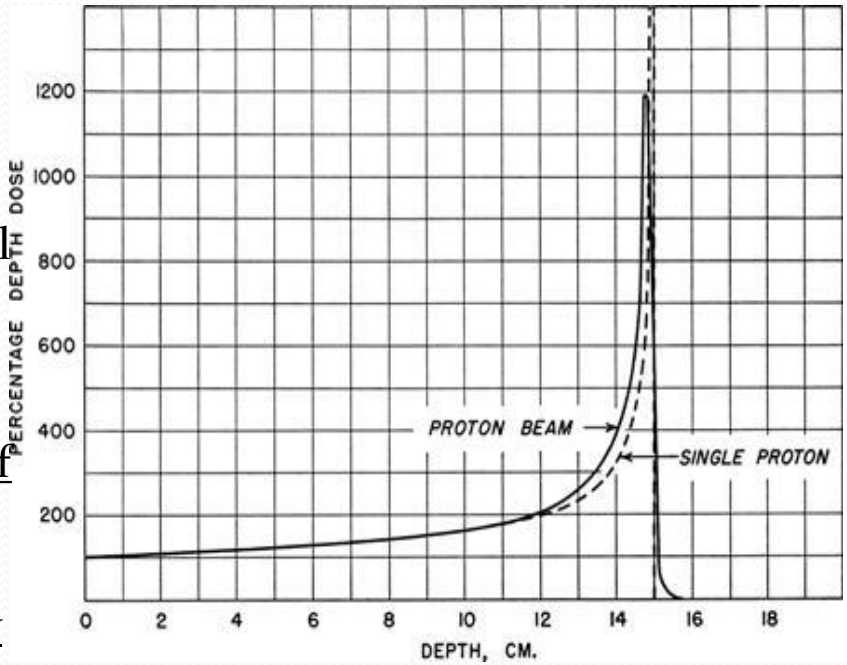

Main advantages with respect to conventional gamma-Xray therapy:

i) For a fixed dose at the tumor, the protons give a lower dose to healthy tissues in front of it;

ii) The Bragg peak shape ensures that healthy tissues beyond the tumor are not damaged;

iii) Proton dose distribution could be made highly conformational to the target → instrinsically 3D

Some uncertanties to be taken into account:

i) Tumor deep estimation error for optimized treatment planning

ii) Patient positioning system

proton Computed Tomography: motivations for a proton imaging system

Patient positioning:

Presently this is done using conventional X ray tomographies (X-CT) taken before the proton treatment session and in a potentially different setup:

pCT → Precision improvement if positioning and treatment could be done in one go

Treatment planning:

Presently defined using X-CT

but protons and photons interact differently with matter

pCT → Direct measure of the stopping power maps with the same particle used to irradiate

Errors on stopping power from X-CT

Table 1. Two typical proton treatment cases and expected range errors. The expected error in the position of the distal fall-off of the dose distribution is expected to be a few millimetres in typical cases of proton therapy.

	Soft tissue			Bone			Total
	Amount (cm)	wer[a] (cm)	Abs. error (cm)	Amount (cm)	wer[a] (cm)	Abs. error (cm)	Abs. error (cm)
Brain	10	10.3	0.11	1	1.8	0.03	0.14
Prostate (lateral beam)	15	15.5	0.17	5	9	0.16	0.33

[a] Water equivalent range.

B. Schaffner and E. Pedroni
Phys. Med. Biol. **43 (1998) 1579–1592**

proton Computed Tomography: principles of operation

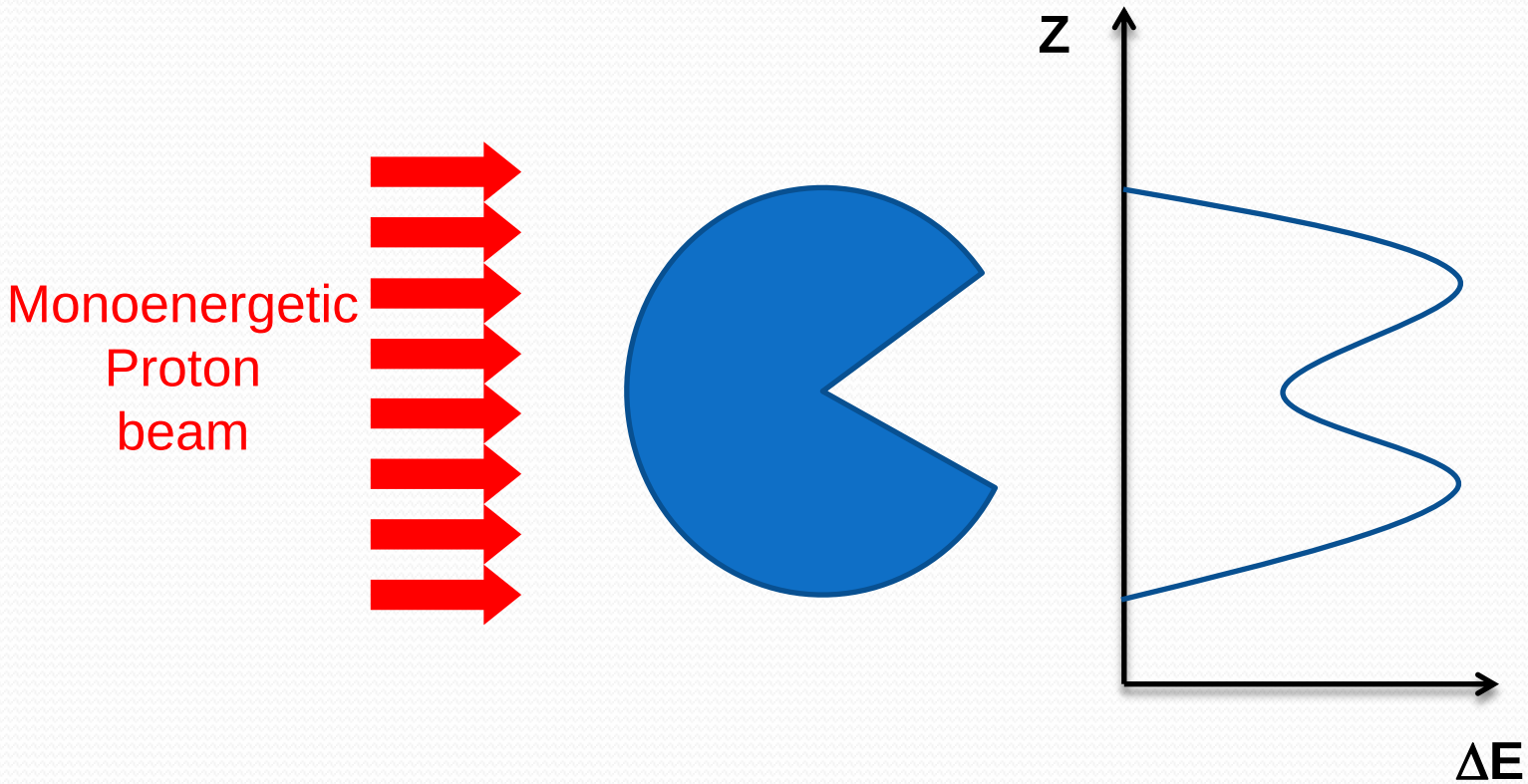

proton Computed Tomography: principles of operation

~~Take n-projections and combine them using X-CT reconstruction algorithms (FBP)~~

True only as first approximation: **protons ≠ X rays**

Monoenergetic Proton beam

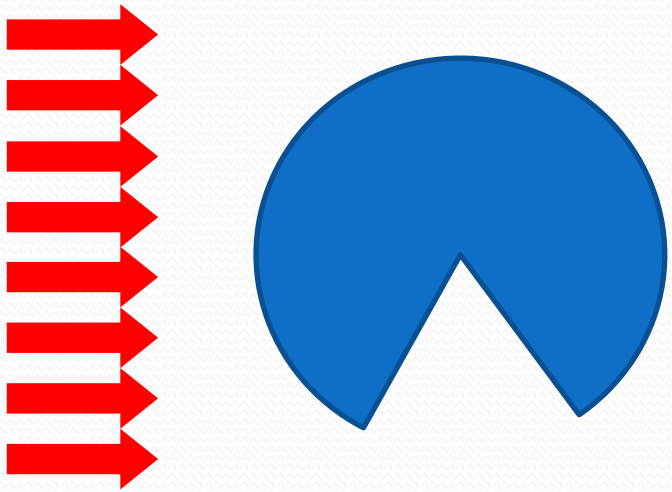

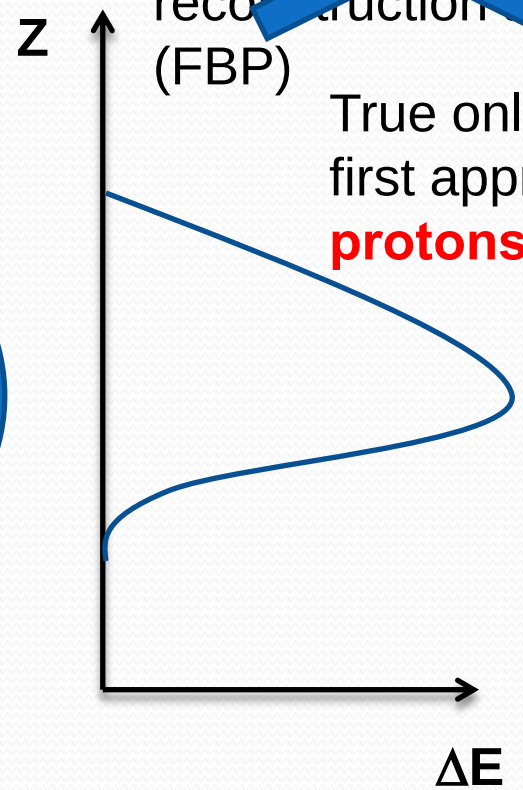

Tracks with multiple scattering

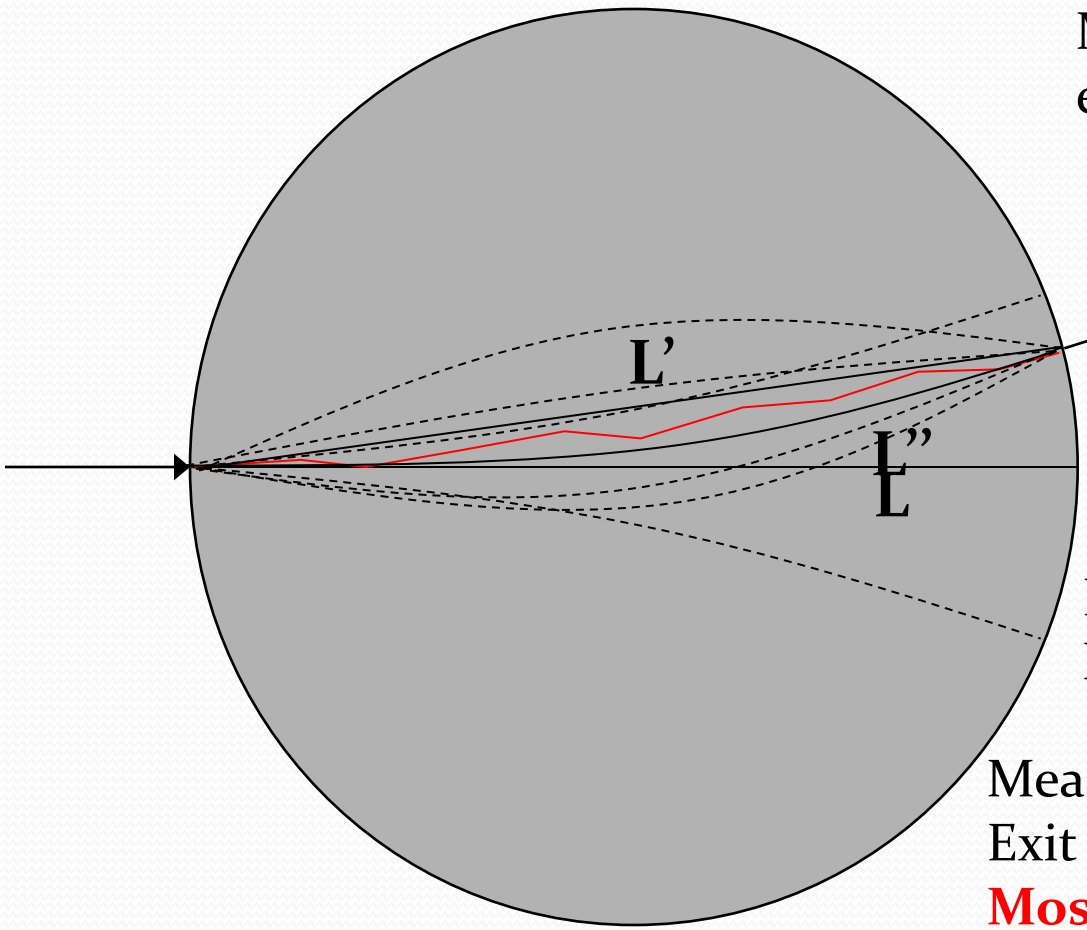

Measurements: entry and exit positions and angles

Proton true trajectory

Measurements:
entry position and angle

L' → straight line with confidence limits

L → straight line with confidence limits

L'' curved trajectory with Norrower confidence limits

Measurements: entry and Exit position and angle + **Most Likely Path (MLP) calculation**

Most likely path error envelope

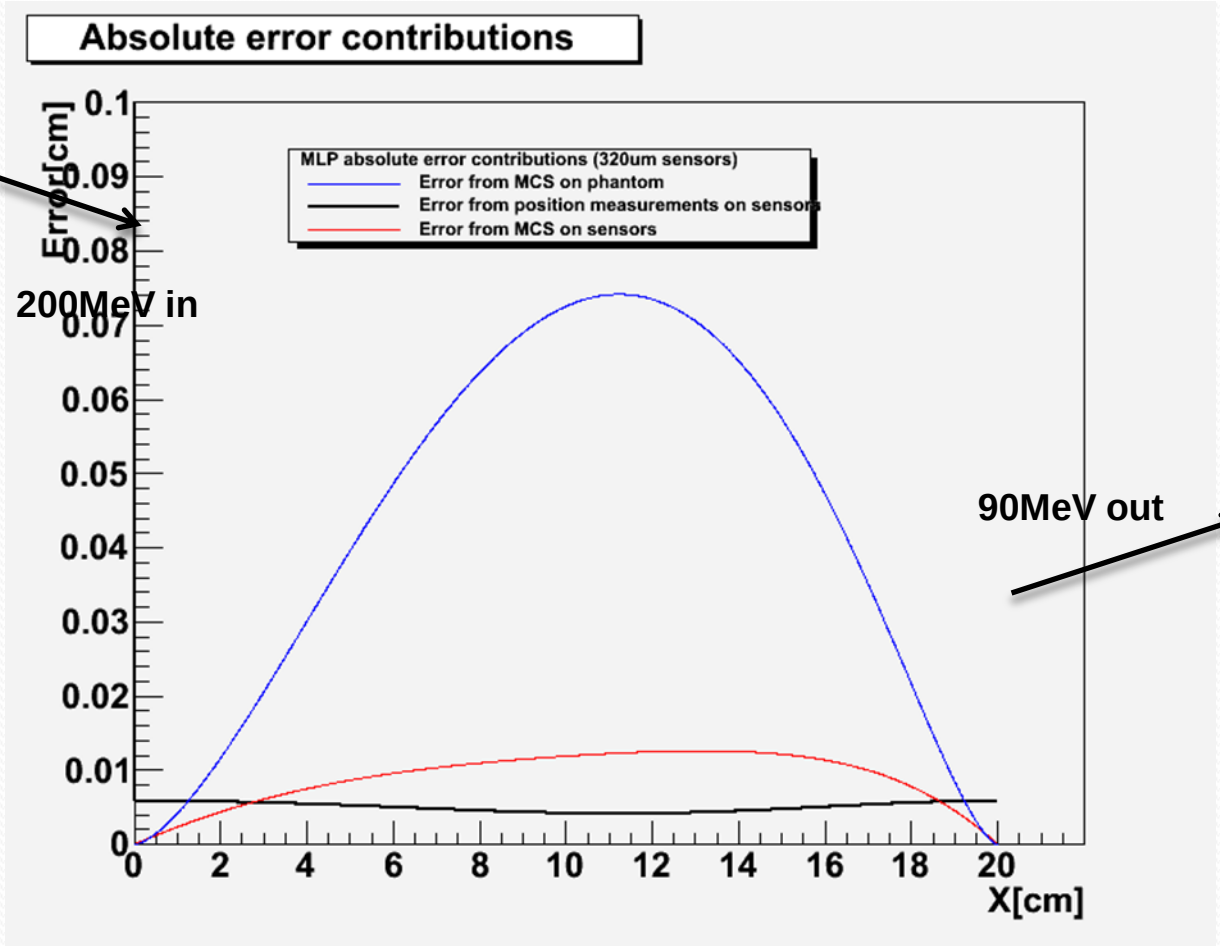

MLP example with 200MeV kinetic energy protons in 20cm of water:

Entry: Y(0) = 0.2cm
Y'(0) = -10mrad
Exit: Y(20) = -0.1cm
Y'(20) = +10mrad

Silicon microstrip detectors:
320μm thick
200μm strip pitch

pCT apparatus

- Single particle proton tracking: silicon strip detectors → MLP
- Residual energy measurement: crystal calorimeter → energy loss

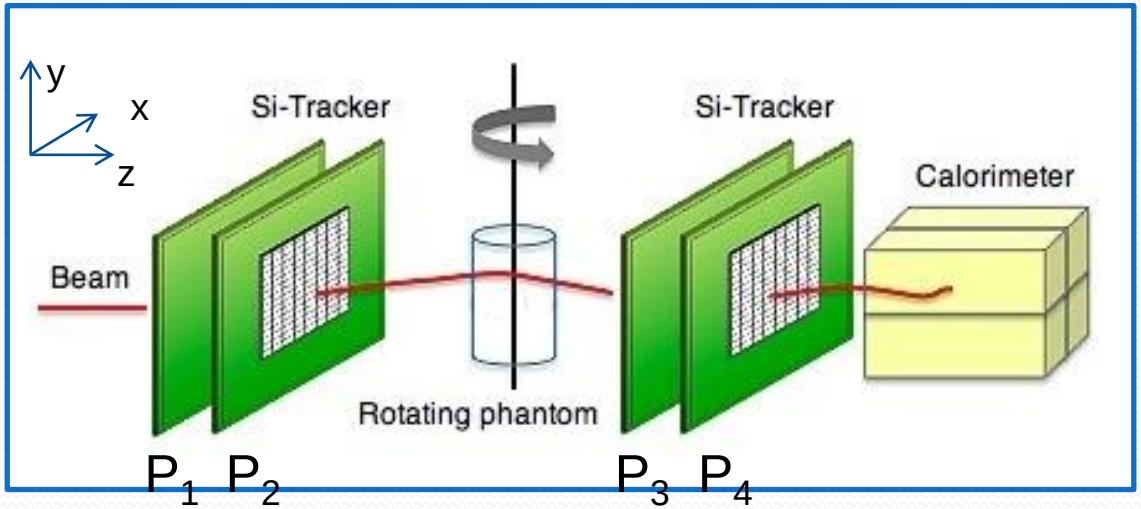

PARAMETER	VALUE
Proton beam kinetic energy	250 -270 MeV
Proton beam rate	1 MHz
Spatial resolution	< 1 mm
Electronic density resolution	<1%
Detector radiation hardness	>1000 Gy
Dose per scan	< 5 cGy

A set of single event information can be processed by appropriate reconstruction algorithms to produce tomographic images.

PRIMA collaboration: pCT apparatus

First test at INFN-LNS:
May 2011

CATANA beam line:
62 MeV protons
used to treat ocular tumors

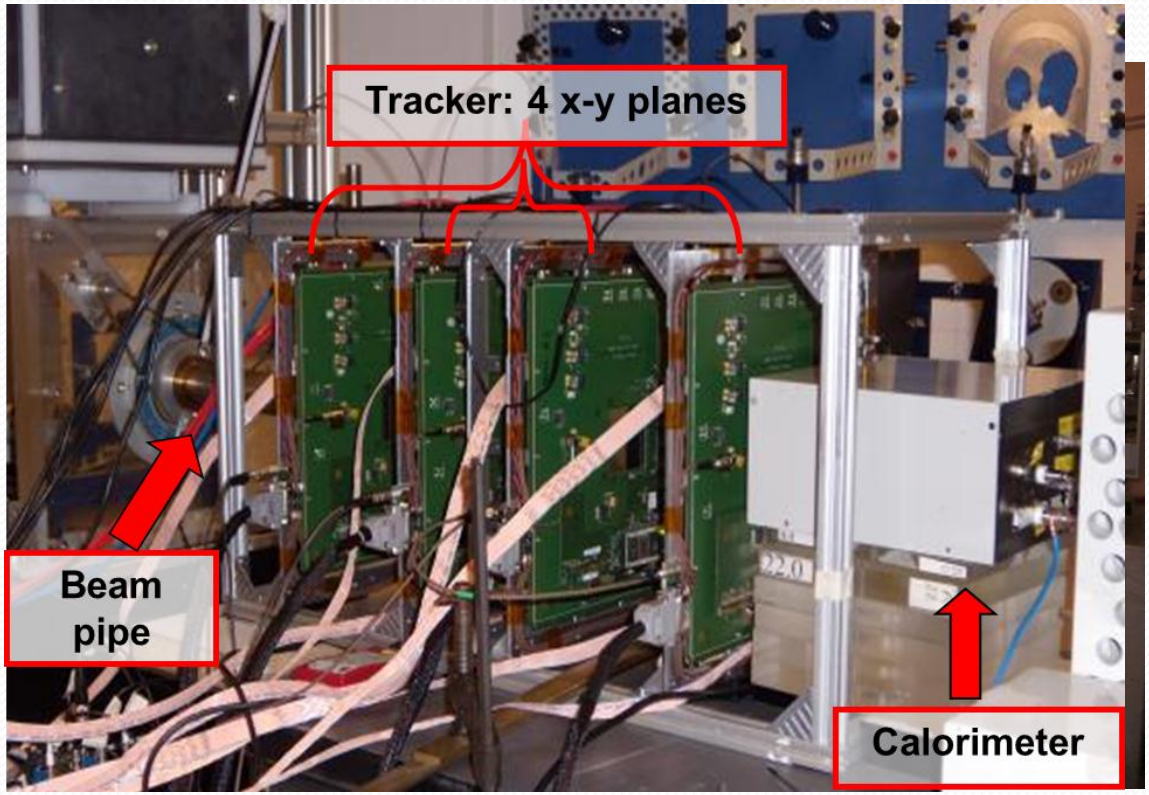

Four x-y silicon microstrip based tracking planes → **Proton entry and exit positions and directions**

Yag:Ce calorimeter → **Proton residual energy**

Tracker module

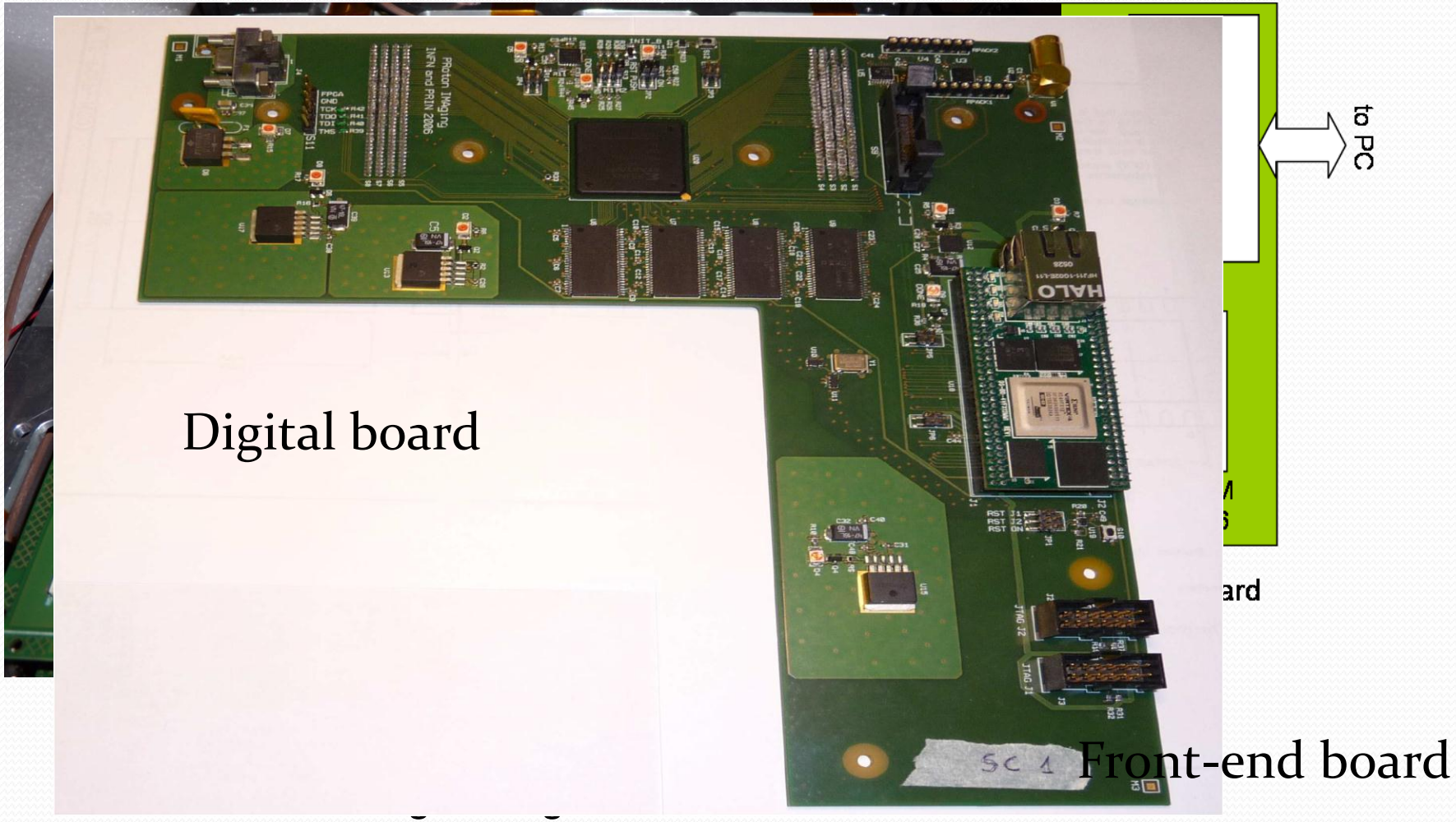

•Ethernet data download at measurement completion

Si Sensor and Front-end ASIC

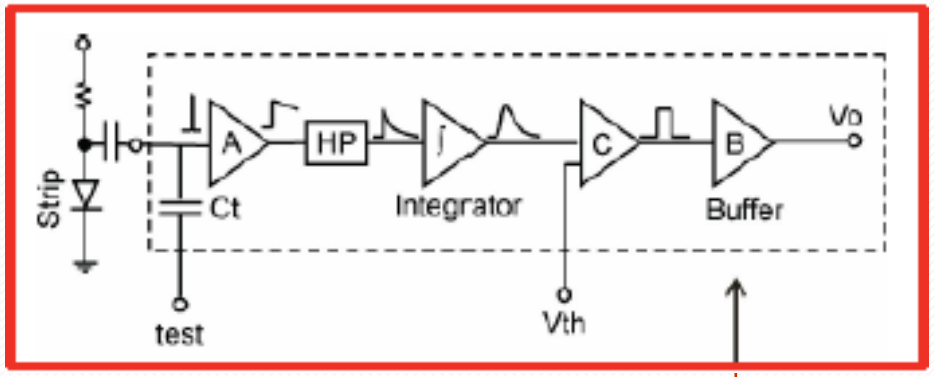

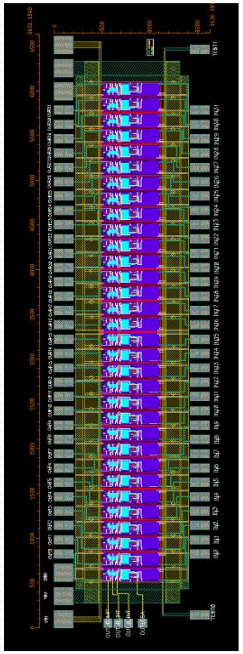

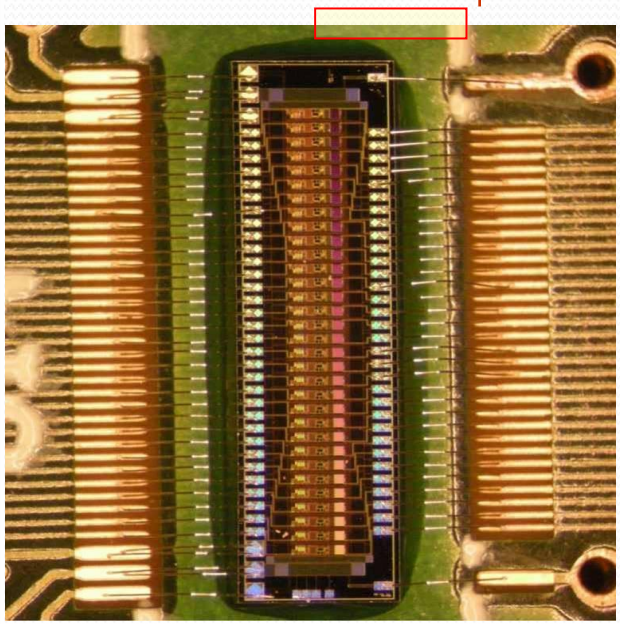

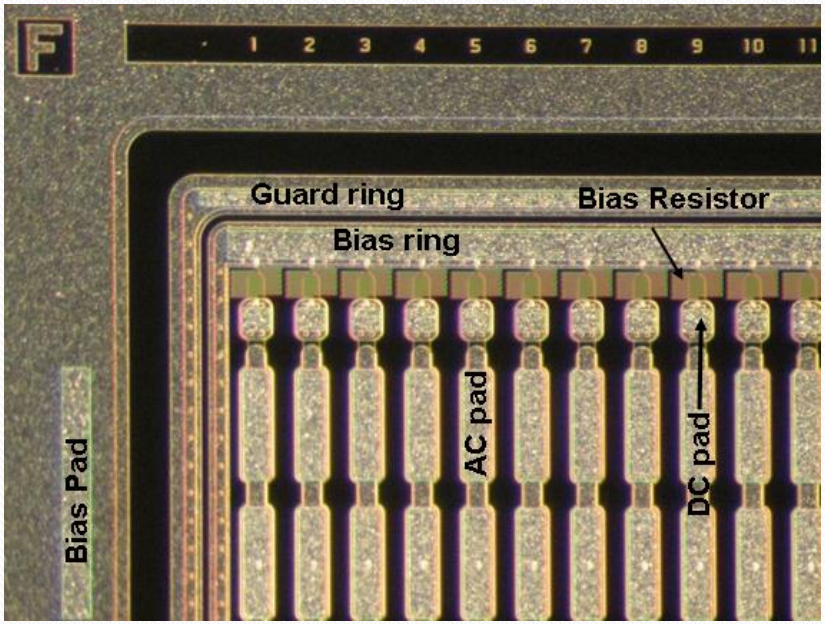

6.6 x 1.6 mm²
32 inputs - 32 outputs
670 mW power consumption
Vcc=+3.3 V

p on n
single sided
<100>
200μm thick
200μm strip pitch

Tracker performance

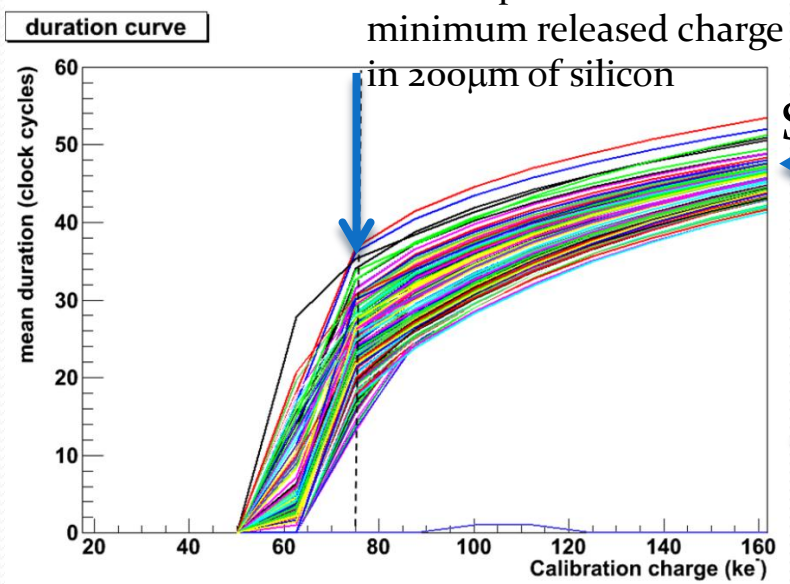

Signal duration

Efficiency

Calibration

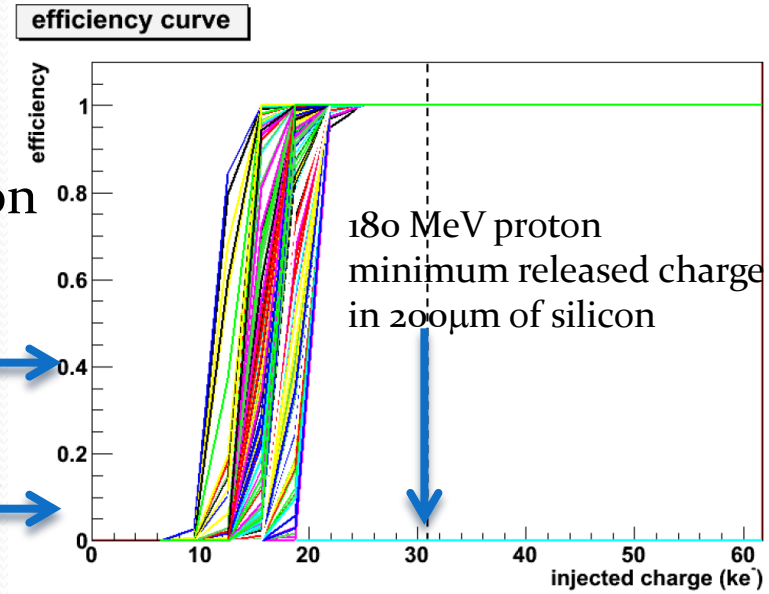

sensor #	1	2	3	5	6	7	9	10
	n.o. at LNS test beam							
strips	2	12	2	2	1	3	0	1
n. o. (x10^{-6}	3.5	21	3.5	3.5	1.7	5.2	<1.7	1.7
	n.o. at SLU test beam							
strips	16	21	27	31	23	36	14	11
n. o. (x10^{-6}	31	40	52	59	44	69	27	21

Noise occupancies

Plane	efficiency (%)	
	62 MeV	175 MeV
P1	97.48	97.67
P2	99.75	99.56
P3	99.69	99.85
P4	99.16	98.68

Data LNS+TSL

Calorimeter and DAQ

4 YAG:Ce scintillating crystals
30 x 30 mm² x 100mm each

YAG:Ce properties	
Physical properties	
Density [g/cm³]	4.57
Hygroscopic0	0No
Chemical formula	$Y_3Al_5O_{12}$
Luminescence properties	
Wavelength of max. emission [nm]	550
Decay constant [ns]	70
Photon yield at 300k [10³ Ph/MeV]	40-50

4 Photodiodes
18x 18 mm²

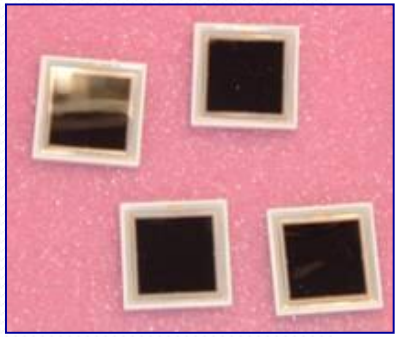

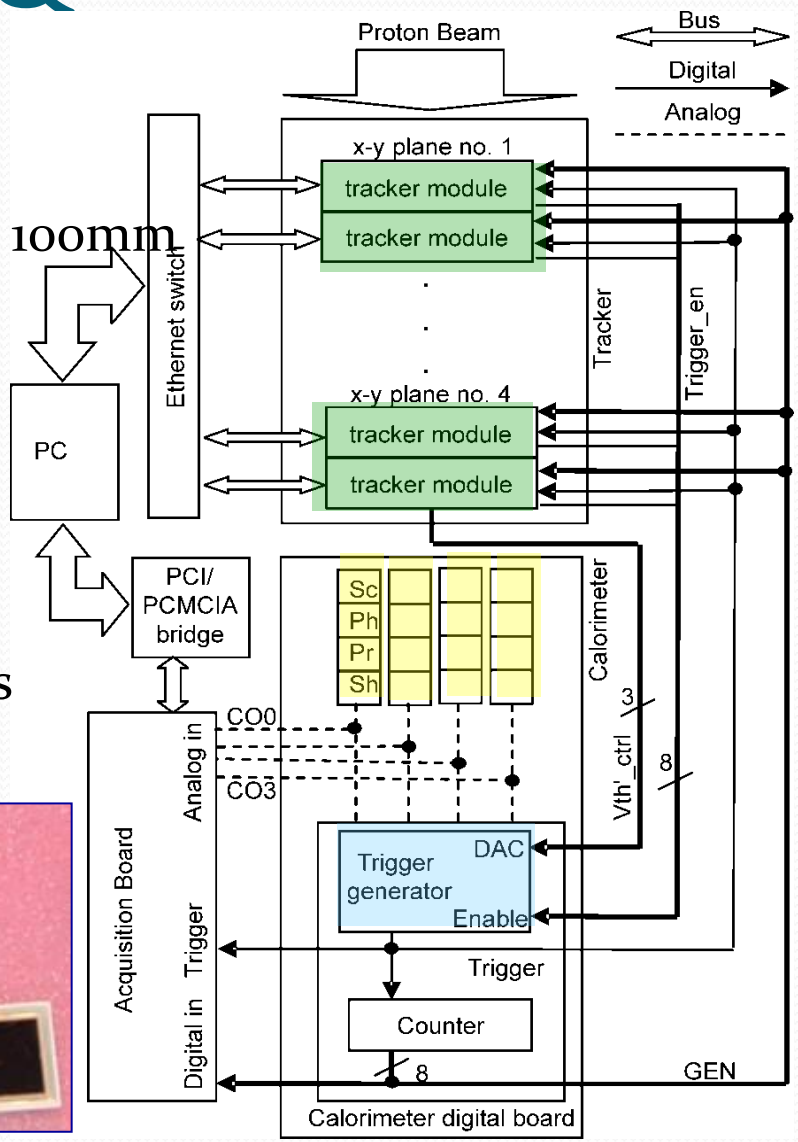

pCT image

PMMA phantom
36 projection steps: 0° → 360°
An average of 950000 events per projection
E_o=62MeV INFN-LNS
Filtered Back Projection algorithm
Tomographic equation
(Wang, Med.Phys. 37(8), 2010: 4138)

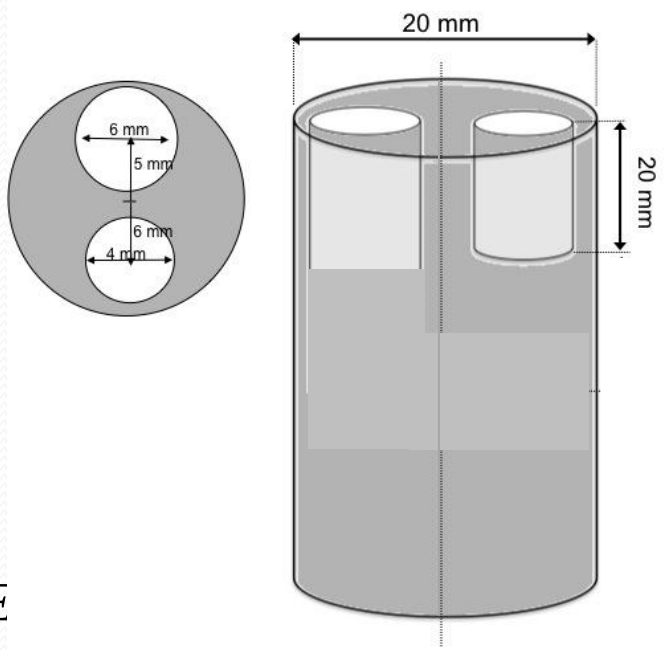

$$\int_{Path} S(x,y,E_0)\ dl = \int_{E_{res}}^{E_0} \left[\frac{S}{\rho}(H_2O,E_0) \Big/ \frac{S}{\rho}(H_2O,E) \right] dE$$

Unknown stopping power distribution (at E_o)

«projection»

E_{res}

Wang projection

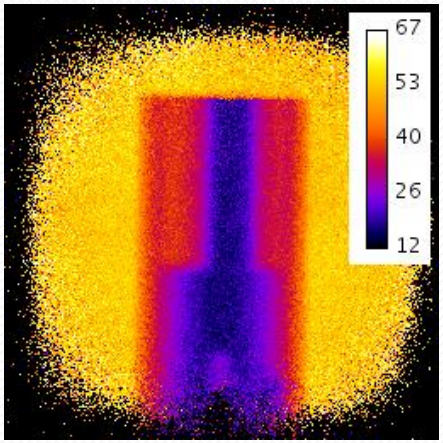

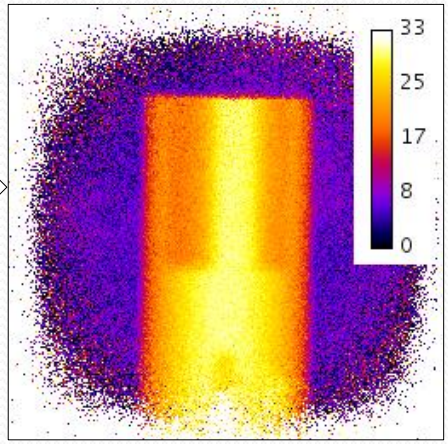

Evaluation of the "projection" term (through numerical integration starting from NIST tables and using the measured E_{res})

pCT image

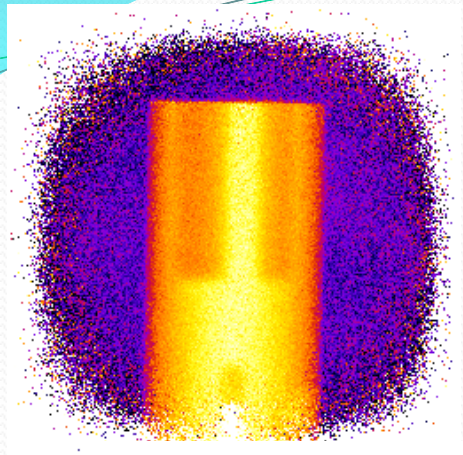

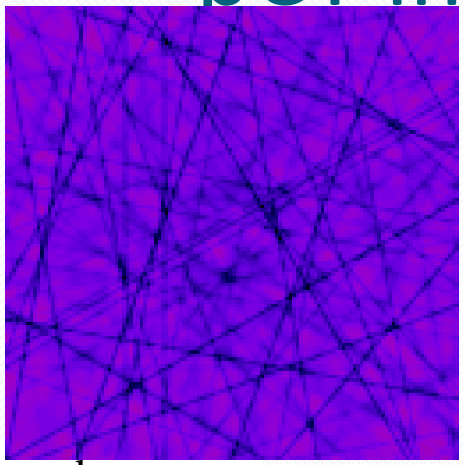

Butterworth filter: order 2,
cut-off 20/128 of the Nyquist freq.

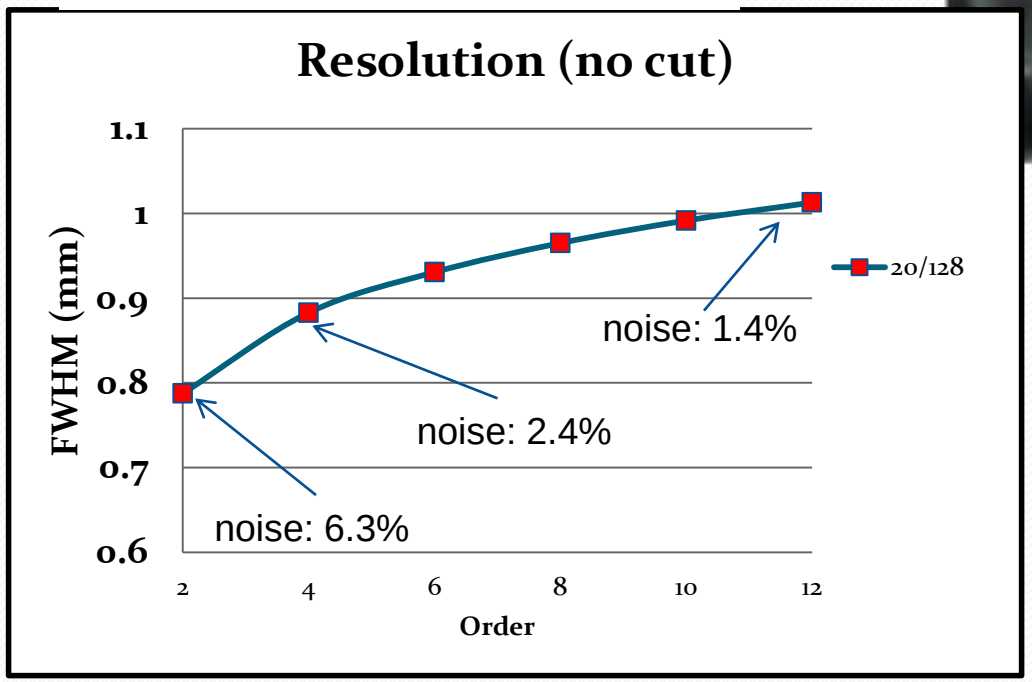

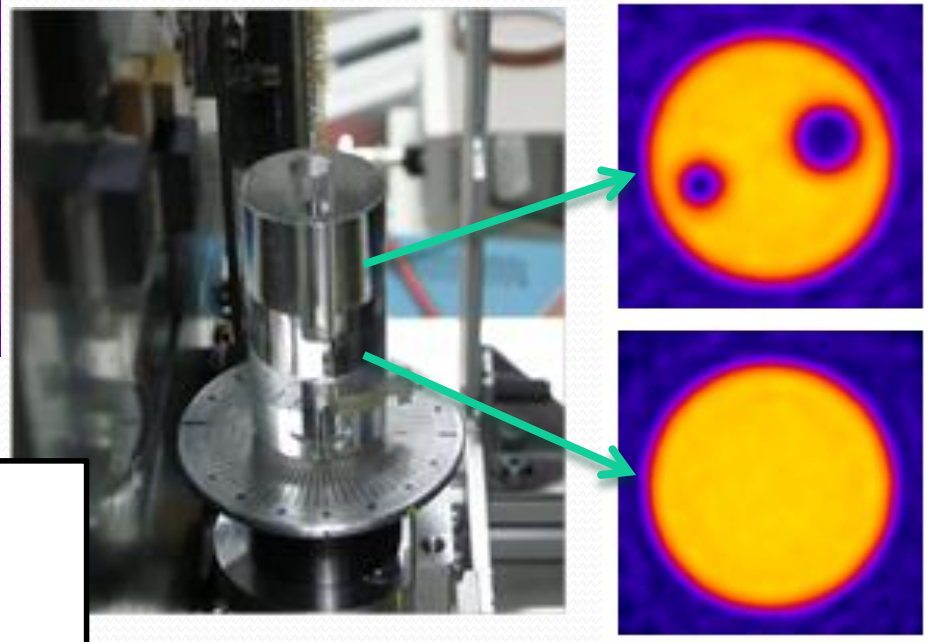

No selection cuts has been applied to the data sample

E. Vanzi et al. The PRIMA collaboration: preliminary results in FBP reconstruction of pCT data –RESMDD12 Conference

How to move from a walnut …..to a brain?

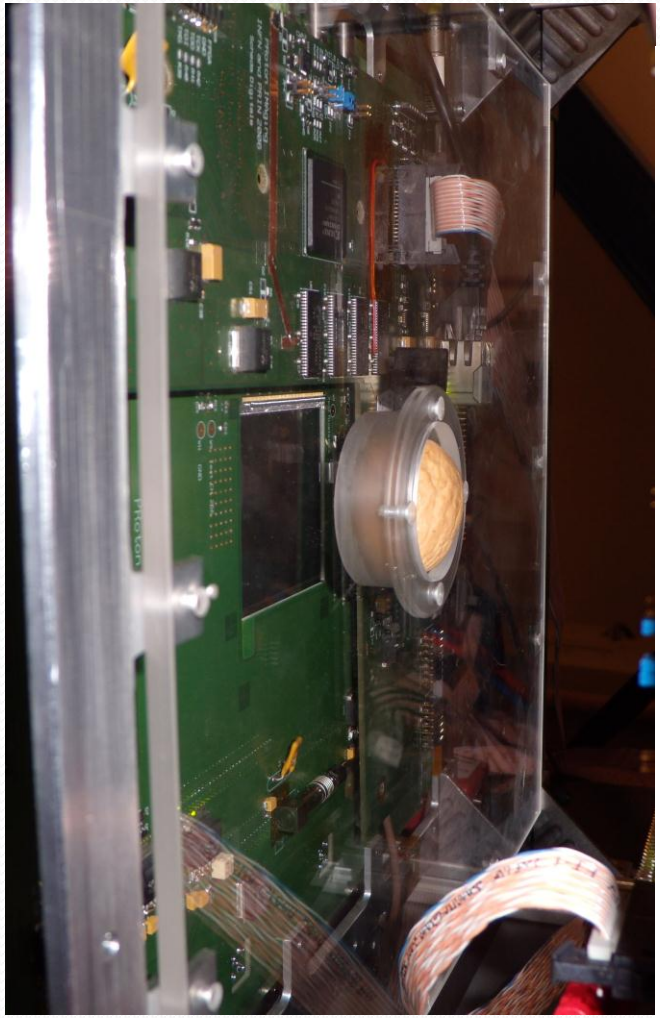

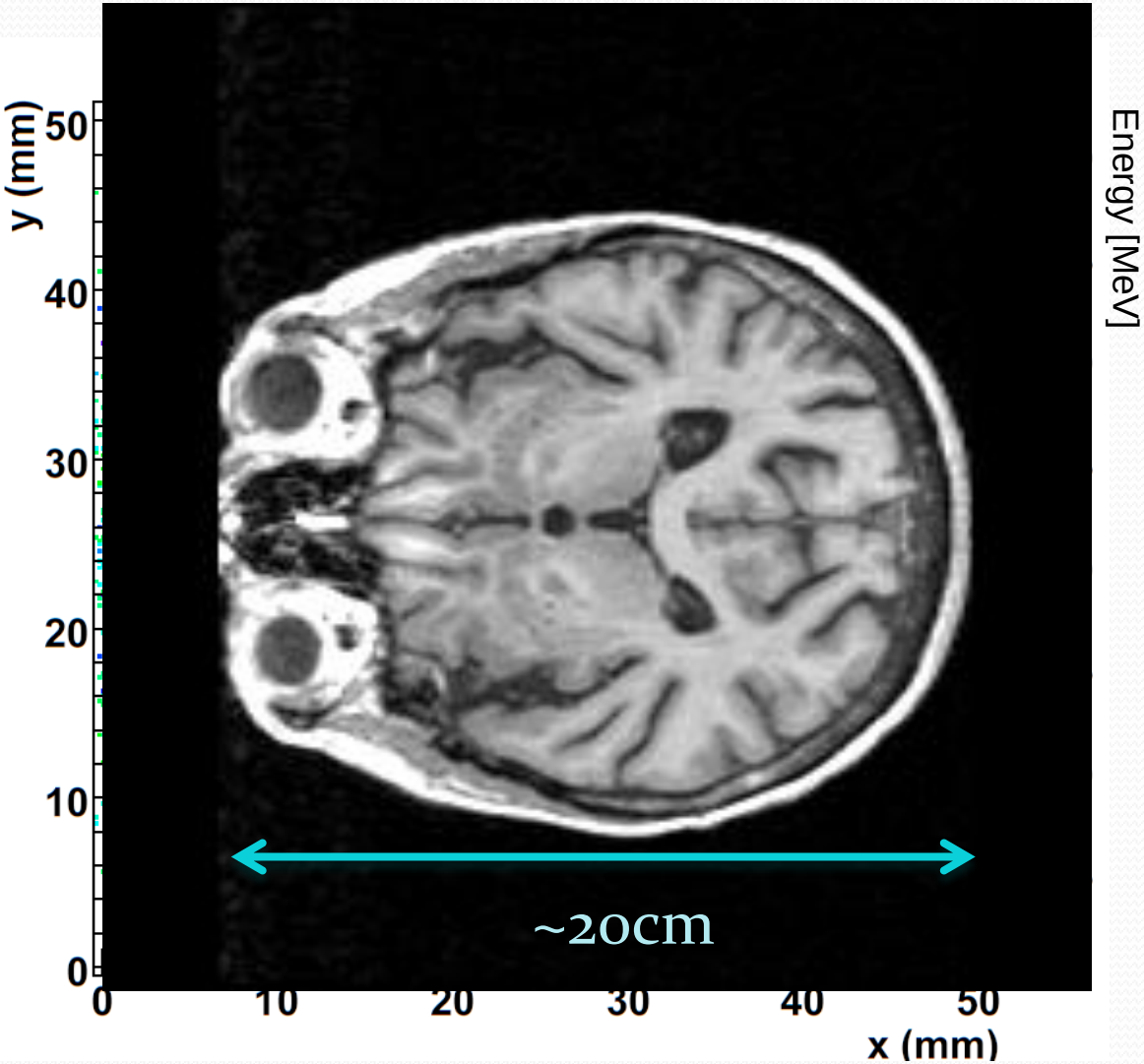

pCT upgrade

- A sy
  - M
  - Y
- But
- On-
- 1 MH
- Rect
  slice

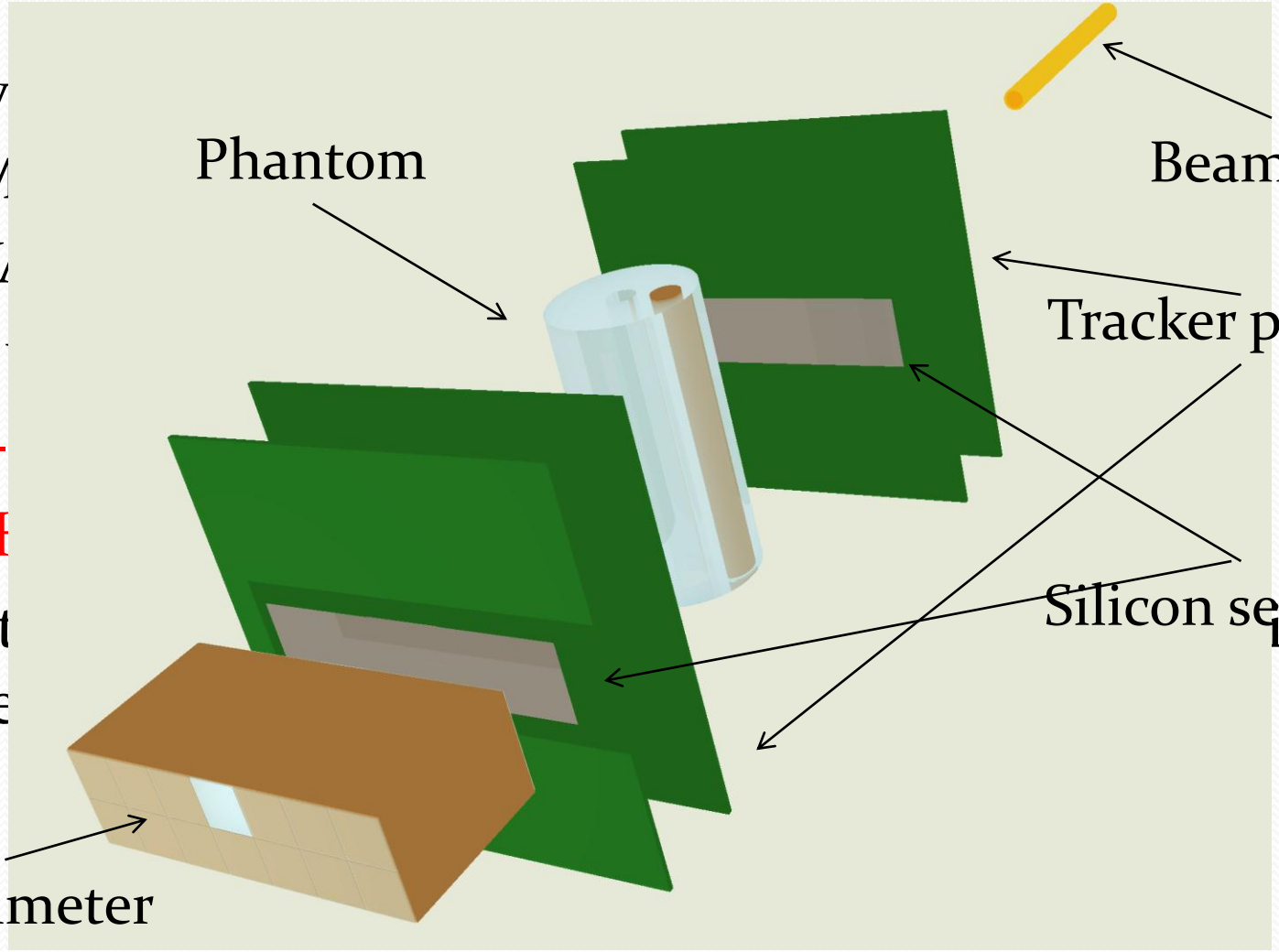

Silicon microstrip detectors

- 36 p on n silicon microstrip detectors (HPK):
  - 51.2 x 51.2 mm² active area
  - <100> crystal type
  - 320 μm thickness
  - 200 μm pitch
  - 256 channels

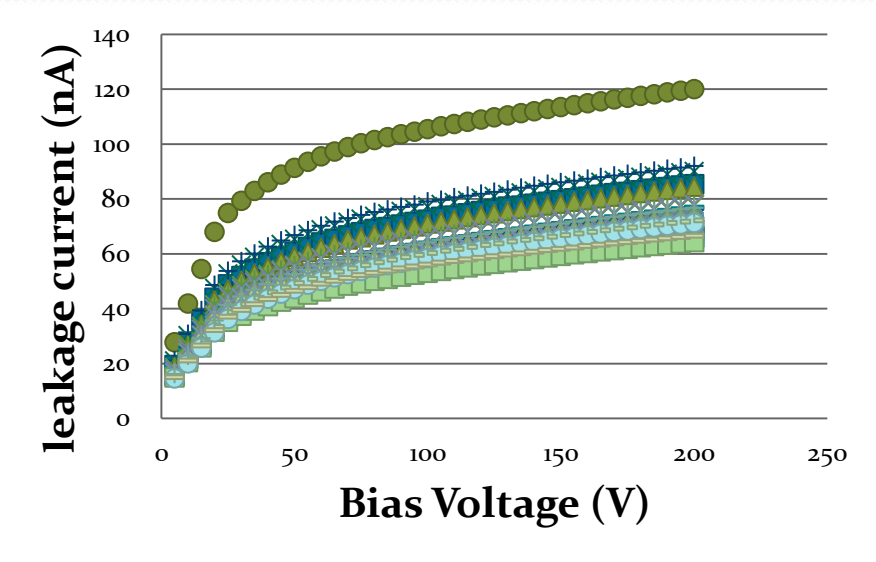

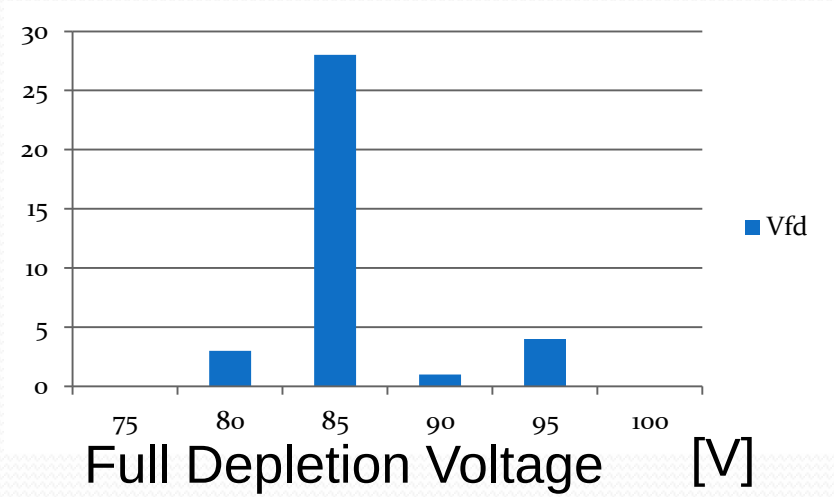

No bad strips for all 36 detectors (9216 strips)

Microstrip sensors layout

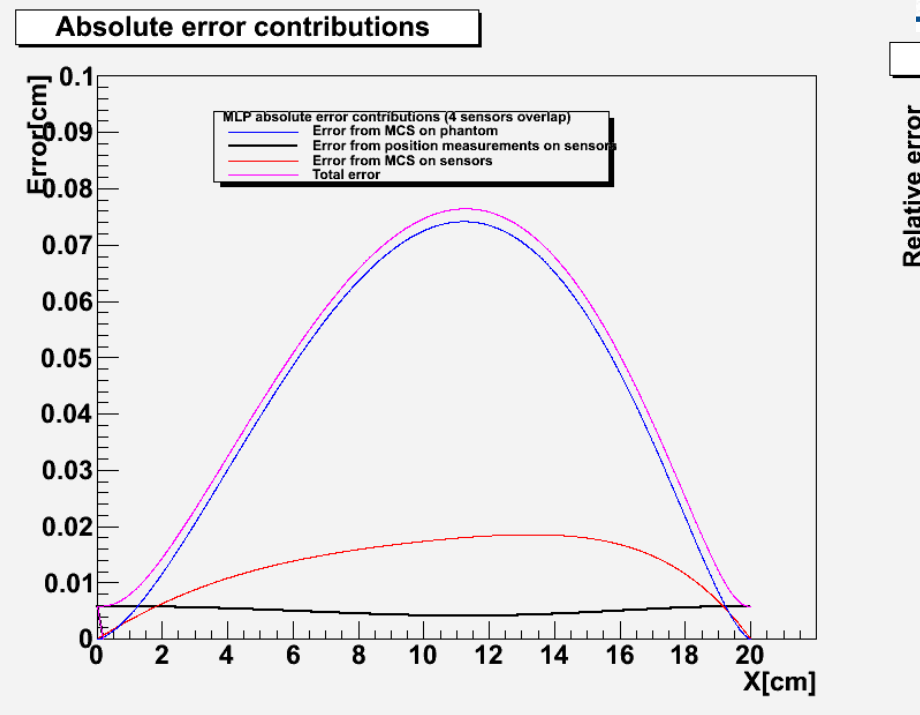

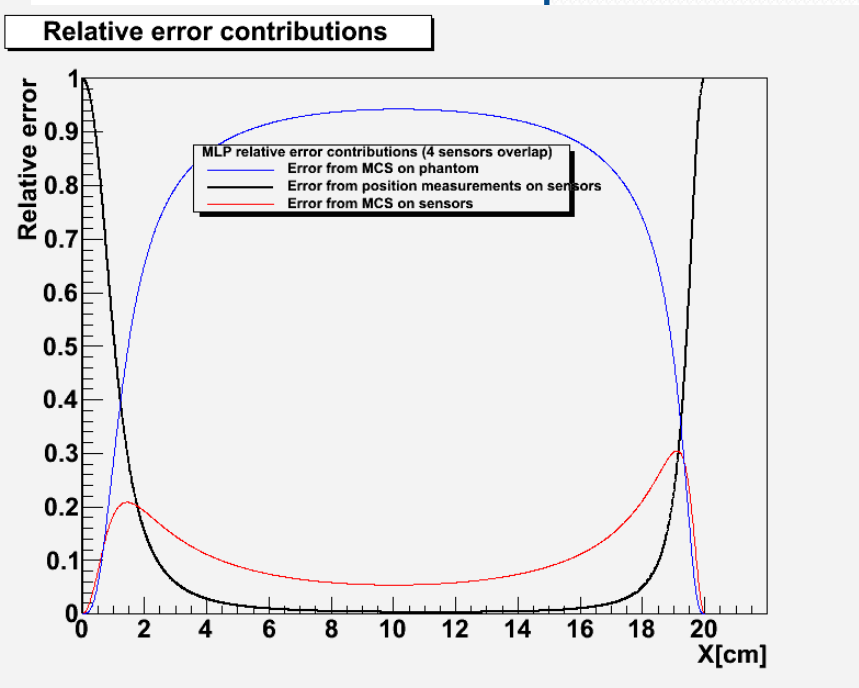

n
es

ses
nd
ut
.

e
l to

hermeticity

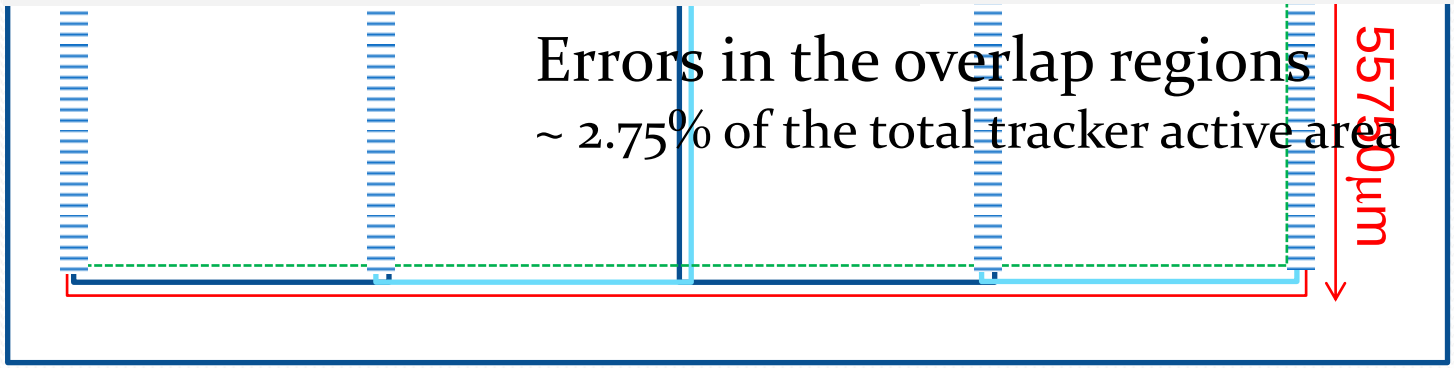

Slim edge option

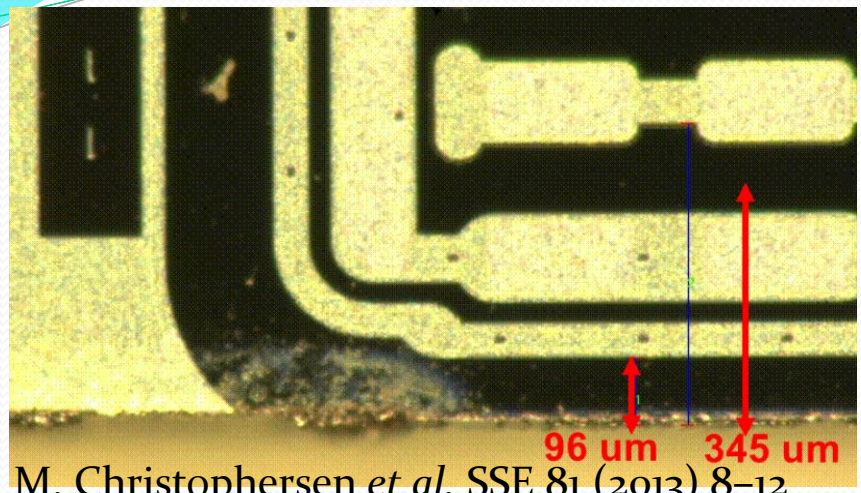

M. Christophersen *et al.* SSE 81 (2013) 8–12
doi:10.1016/j.sse.2012.12.006

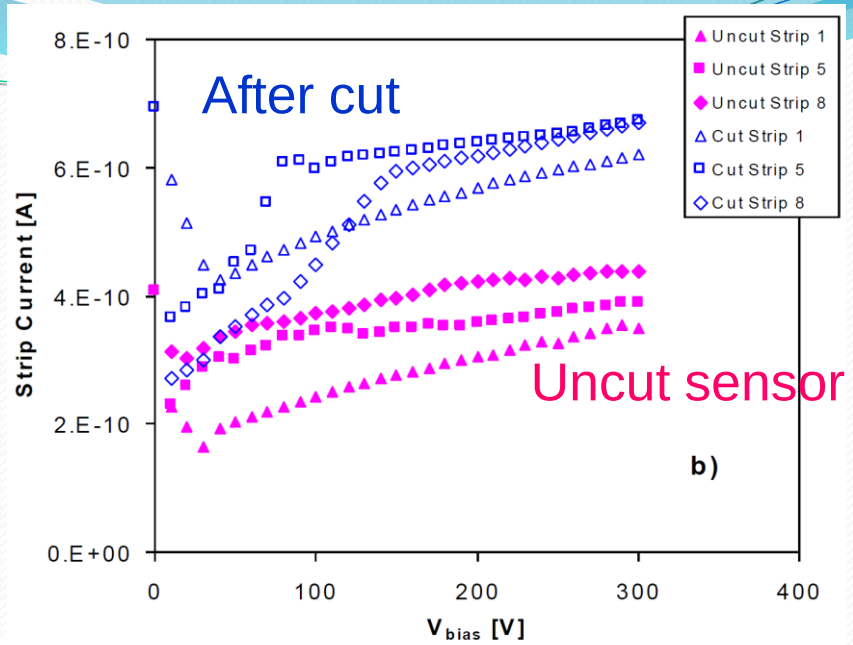

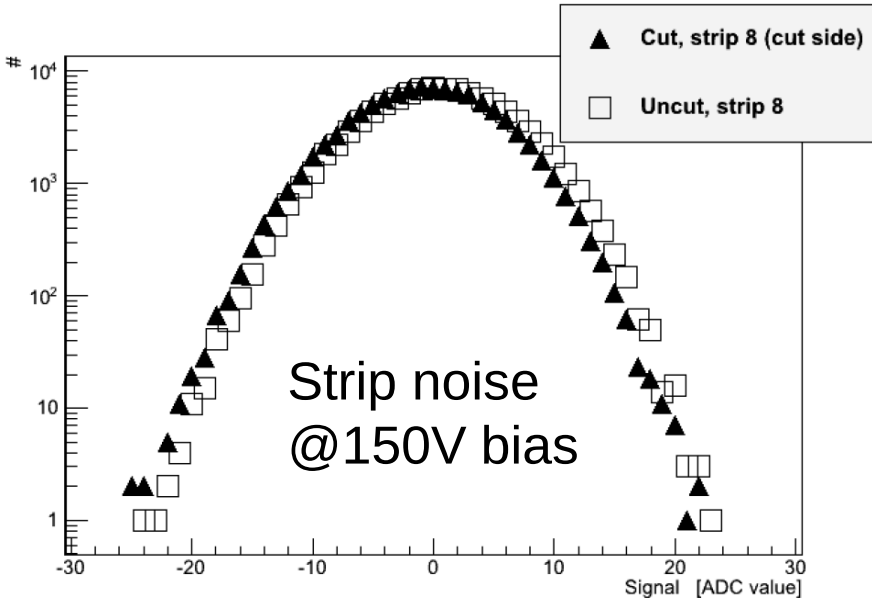

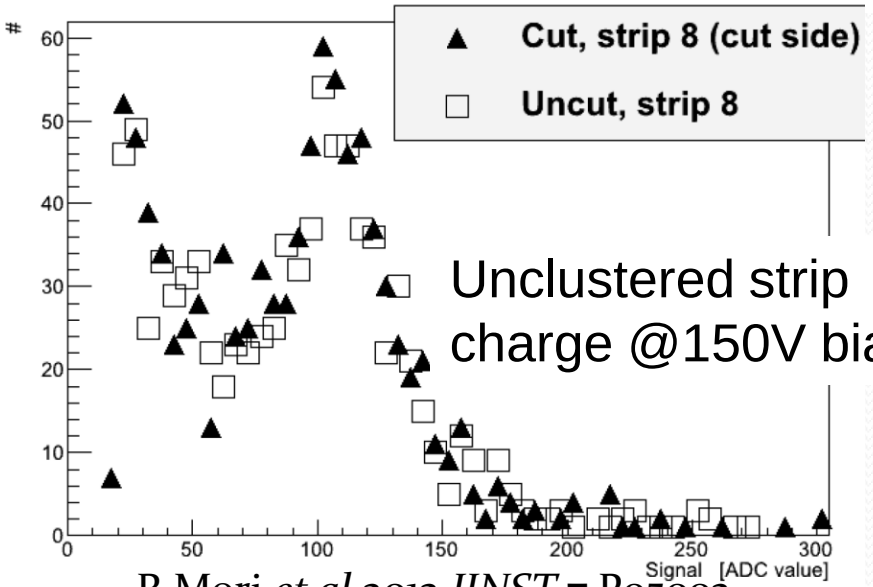

R Mori *et al* 2012 *JINST* 7 P05002
doi:10.1088/1748-0221/7/05/P05002

New tracker Front end board

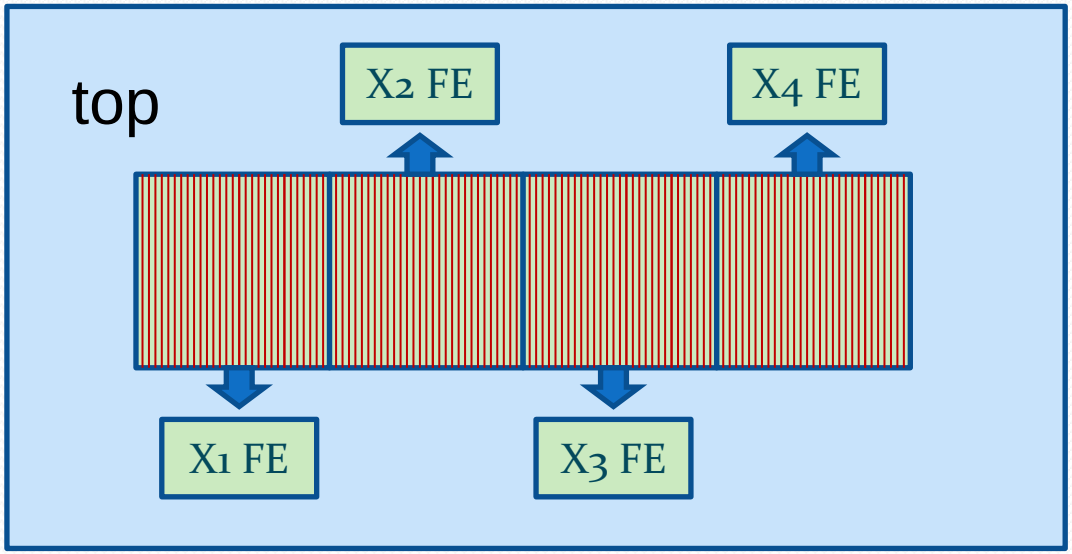

- Double sided (12 layers) PCB
- 4 FE blocks on top (x-strips)
- 2 FE blocks for the y-strips to minimize load capacitance to the front-end electronics

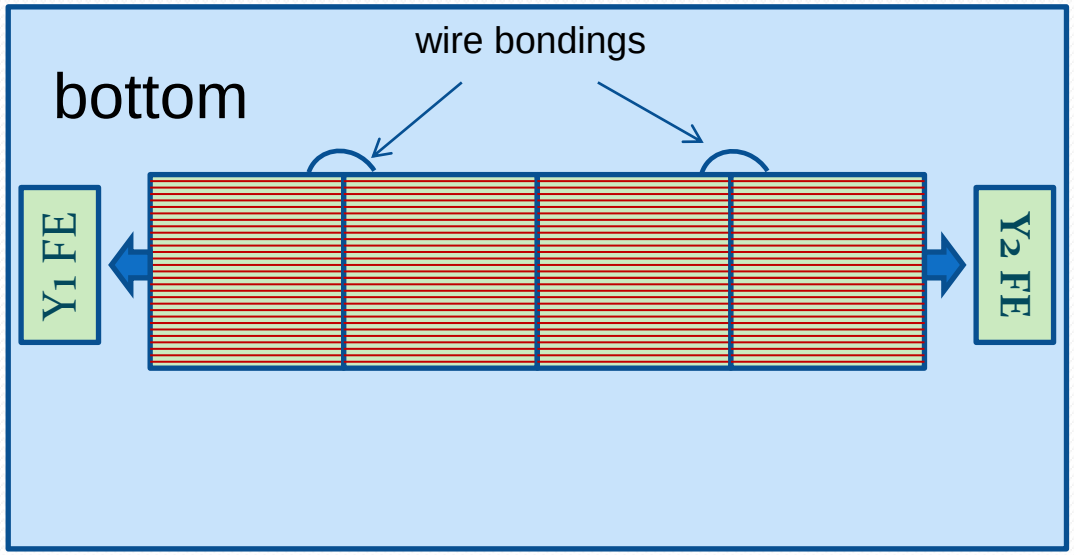

Tracker DAQ architecture

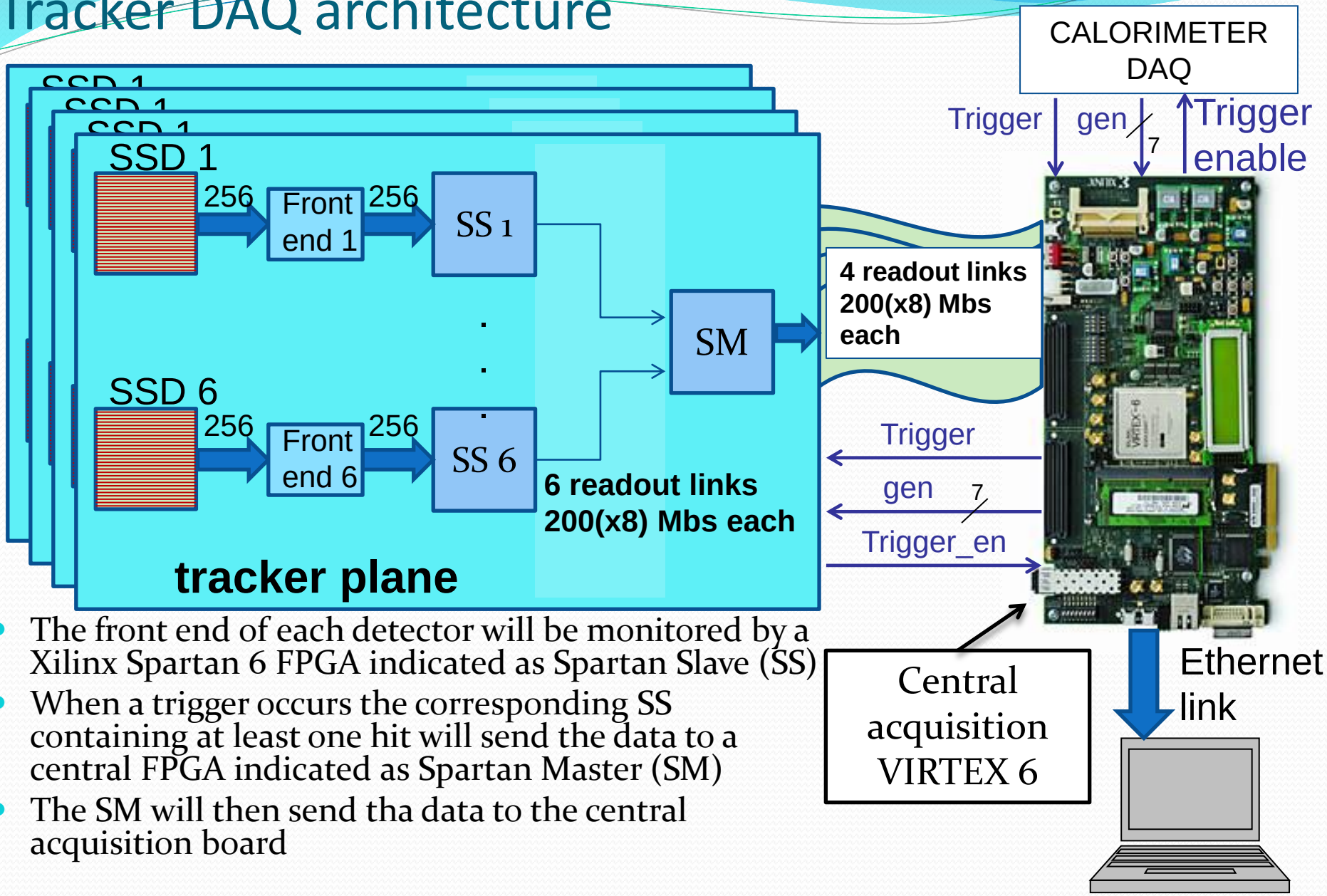

- The front end of each detector will be monitored by a Xilinx Spartan 6 FPGA indicated as Spartan Slave (SS)
- When a trigger occurs the corresponding SS containing at least one hit will send the data to a central FPGA indicated as Spartan Master (SM)
- The SM will then send tha data to the central acquisition board

New calorimeter

Data Acquisition System

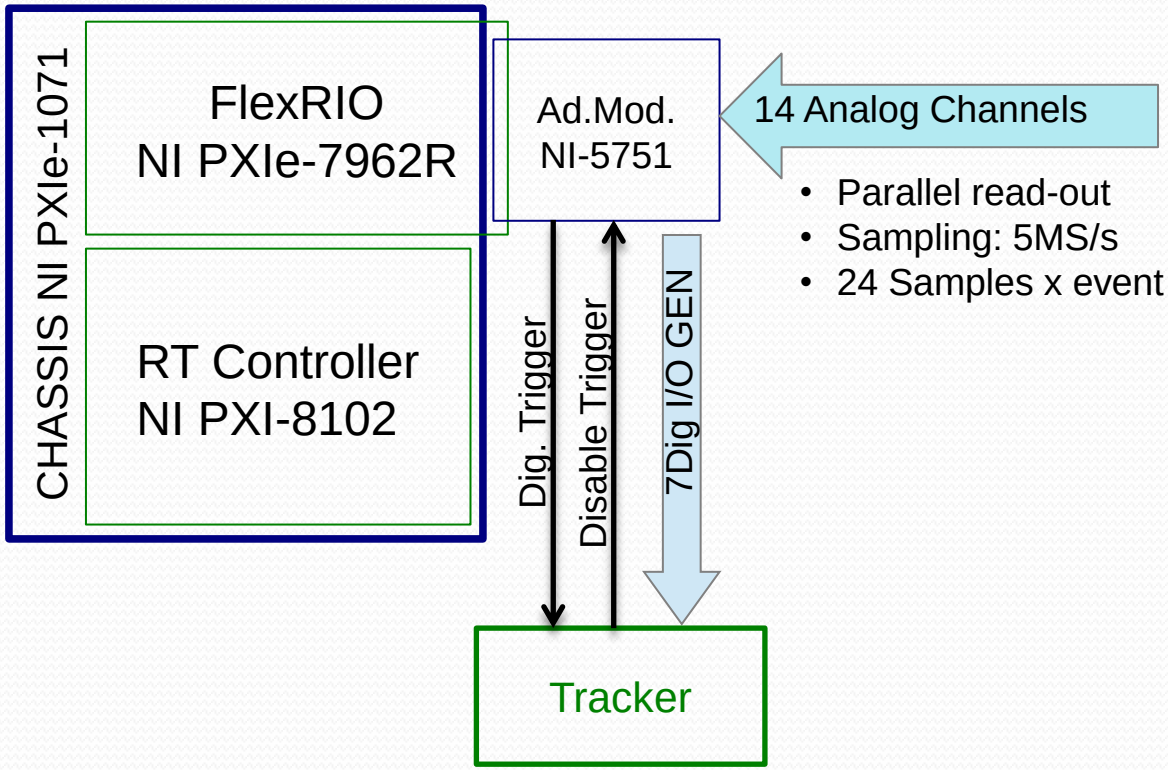

- Parallel read-out
- Sampling: 5MS/s
- 24 Samples x event

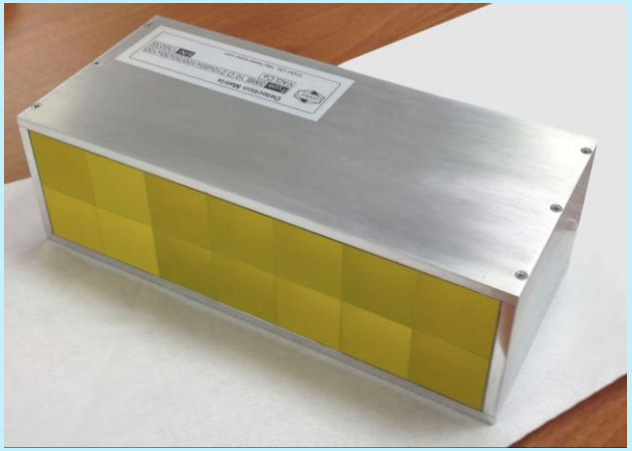

2x7 YAG:Ce Crystals Array
Size: 3x3x10cm^3

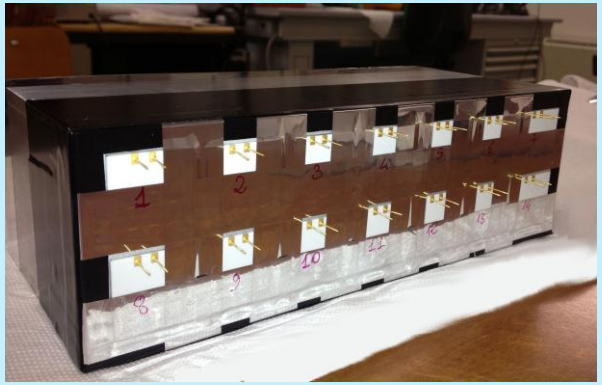

Silicon Photodiodes 1.8x1.8cm^2

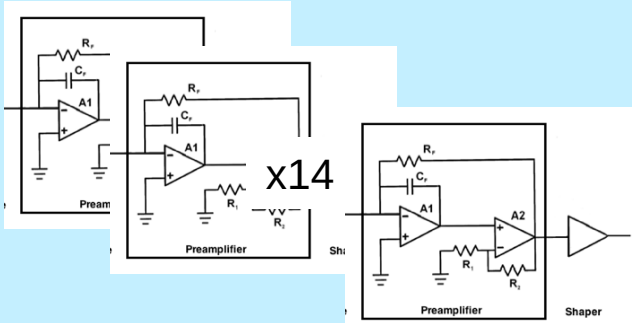

Fast Charge Amplifier + Shaper

Conclusions

- A pCT device will be useful to increase the effectiveness of hadron therapy (patient positioning and treatment plan precision)
- The 'Prima' collaboration has built a prototype (5x5cm^2) capable of acquire tomographic images
- Tomographic images have been reconstructed using FBP
  - 0.9mm (FWHM) spatial resolution
  - 2.4% (r.m.s.) noise
- An upgraded detector with an extended field of view necessary to perform pre-clinical studies has been defined and it is now under construction