Ryu Sawada
for MEG II calorimeter group

ICEPP, the University of Tokyo

6/6/2014
TIPP'14
Amsterdam

Upgrade of MEG Liquid Xenon Calorimeter

MEG Experiment

Searching for the cLFV rare decay $\mu^+ \to e^+ \gamma$ with the highest sensitivity.

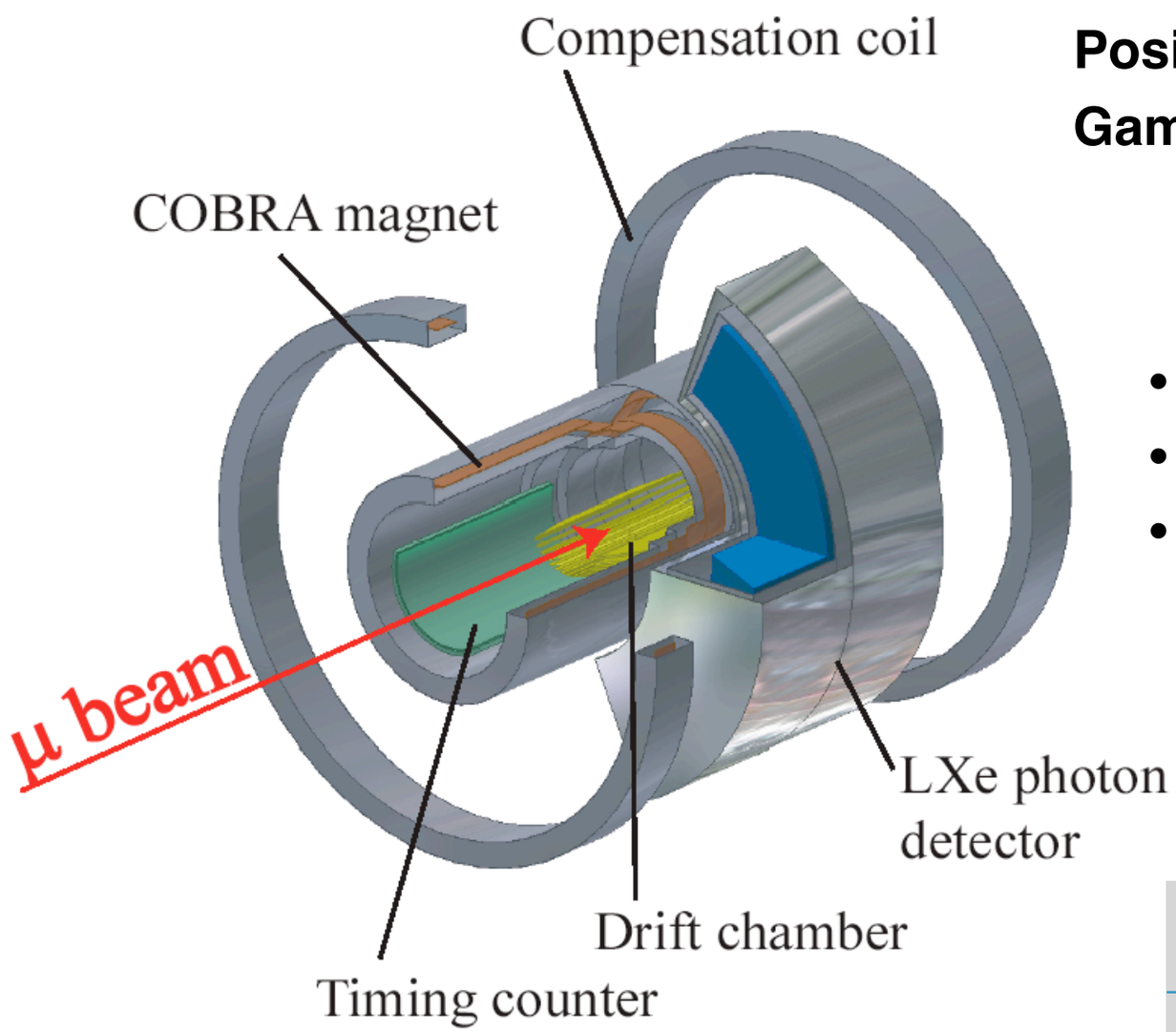

Muon beam : Most intense beam at PSI

Positron detector : Drift chamber + plastic scintillator

Gamma detector : LXe calorimeter

- 1999 : Proposal to PSI
- 2009-2013 : Physics run
- The latest result with 2009-2011 data

$Br(\mu^+ \to e^+ \gamma)$

Sensitivity	7.7×10^{-13}
Best fit	-0.6×10^{-13}
Uppler limit @ 90% C.L.	**5.7×10^{-13}**

Phys. Rev. Lett. 110, 201801 (2013)

Signal and background

- Accidental background
  - Michel decay e^+ + random γ
  - Flat timing, angle
  - E < 52.8 MeV

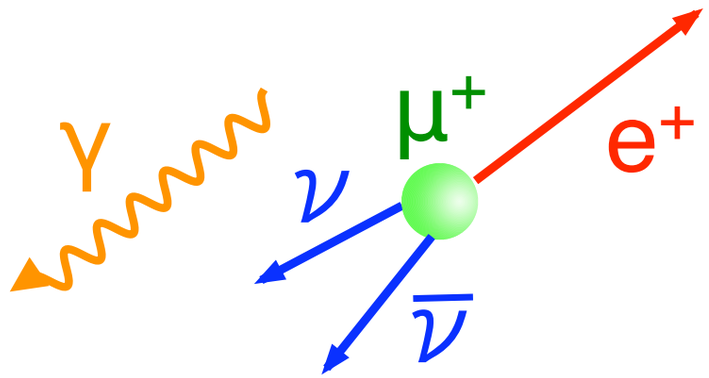

- Signal
  - μ^+ decay at rest
  - 52.8MeV (half of M_μ) (E_γ,E_e)
  - Back-to-back ($\theta_{e\gamma}$,$\varphi_{e\gamma}$)
  - Timing coincidence ($T_{e\gamma}$)

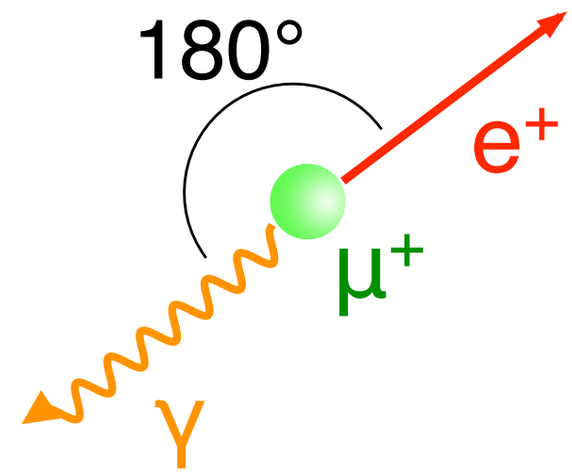

- Radiative muon decay
  - $\mu^+ \rightarrow e^+\nu\nu\gamma$
  - Timing coincident
  - not back-to back
  - E < 52.8MeV

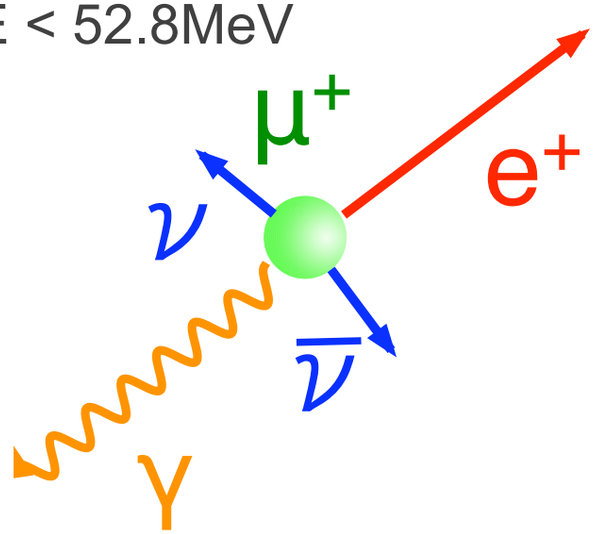

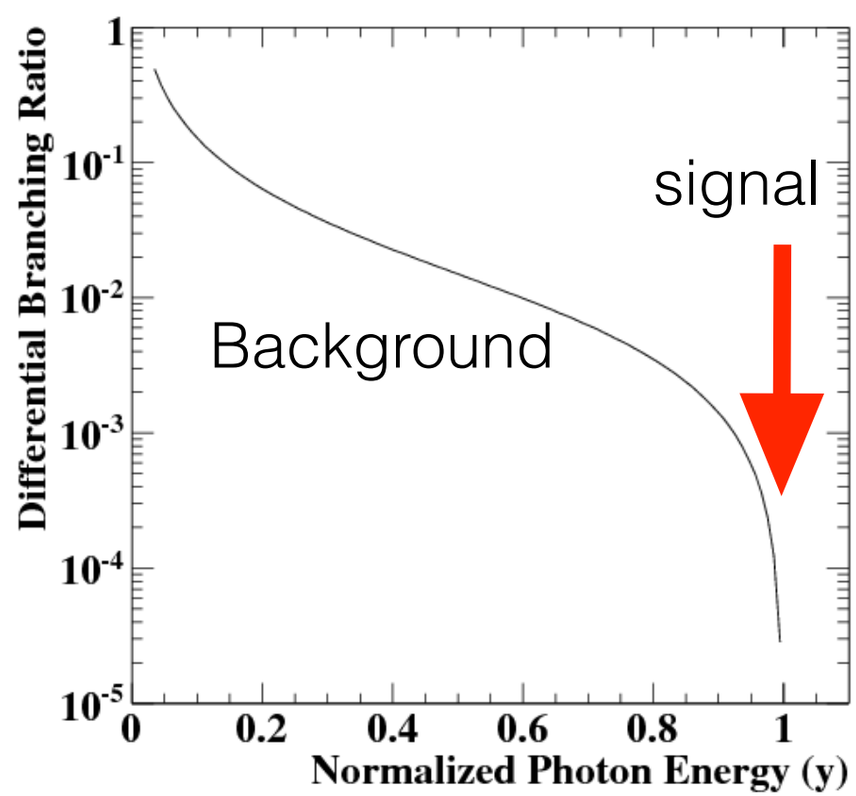

MEG calorimeter

- The largest (**900 litters**) LXe detector
- **846** VUV sensitive PMTs directly detect scintillation photons (Q.E × C.E. ~ **16%** for 175nm photons)
- Excellent energy, position and time resolutions
- Pileup-identification capable

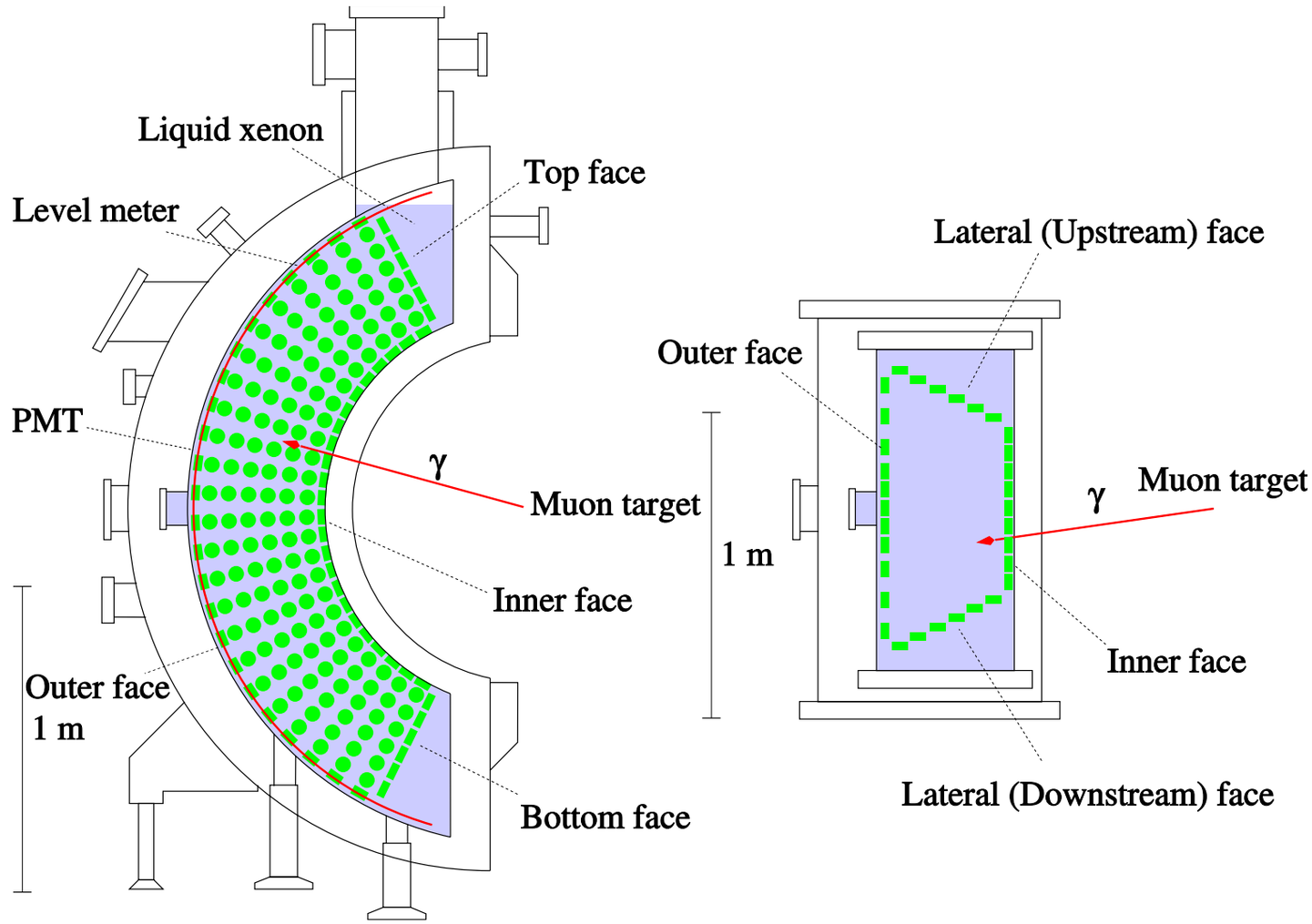

2" PMT (Hamamatsu R9869)

	NaI	BGO	GSO	LSO	LXe
Effective atomic number	50	73	58	65	54
Density (g/cm	3.7	7.1	6.7	7.4	3
Relative light output (%)	100	15	20-40	45-70	80
Decay time (nsec)	230	300	60	40	4.2, 22, 45

Calorimeter performance limitations

Resolution of shallow events (~40%) is worse because of **large fluctuation of photon-collection efficiency**.

Lower energy tail due to **energy loss** of γ rays before entering LXe, and **energy leaks** from the inner or lateral faces.

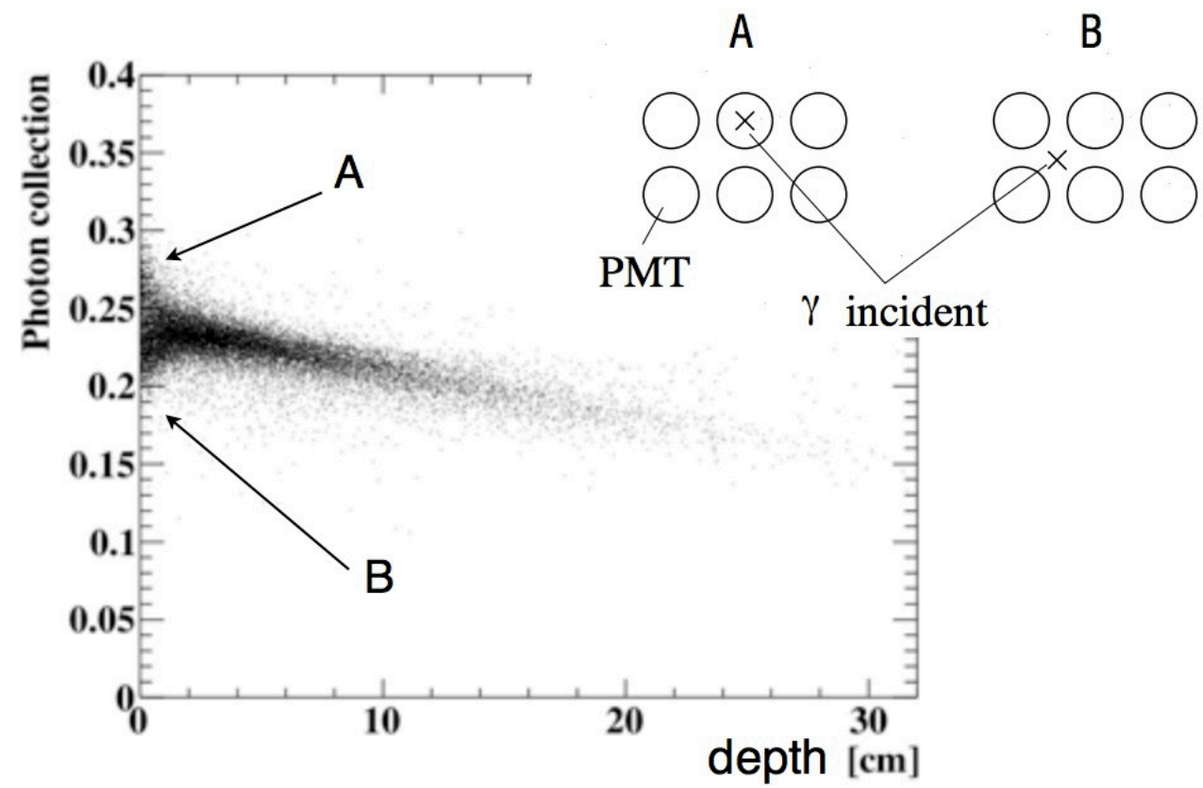

Energy leaks from LXe

Energy loss before LXe

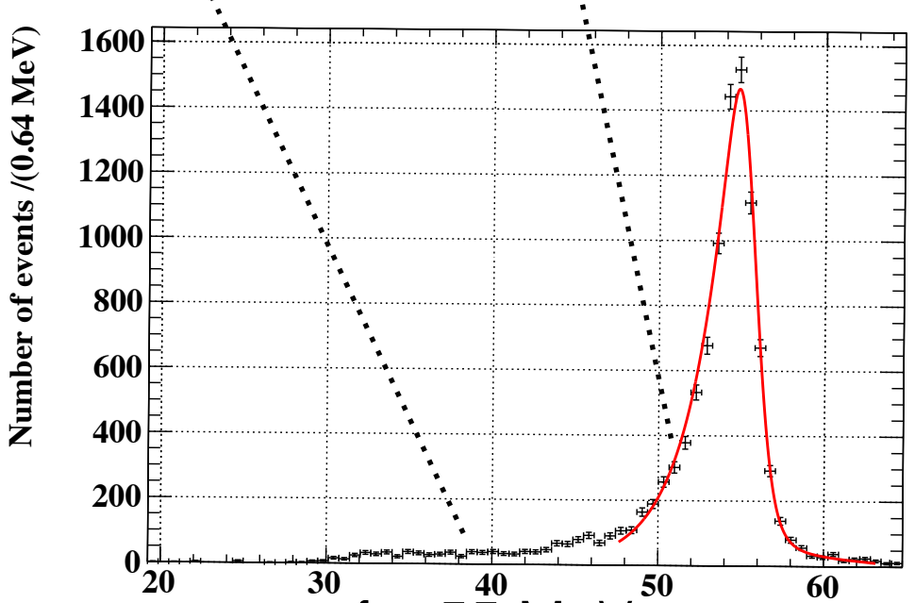

Energy spectrum for 55 MeV γ

	shallow events	deep events (d > 2cm)
Energy resolution [%]	2.4 / 1.7	
Position resolution [mm]	5	
Time resolution [ps]	67	
Efficiency	63	

MEG II

Proposal approved by PSI in 2013

* optional

Target
Thinner target
Active target option *

LXe Calorimeter
Higher resolutions and efficiency with using smaller photo-sensors

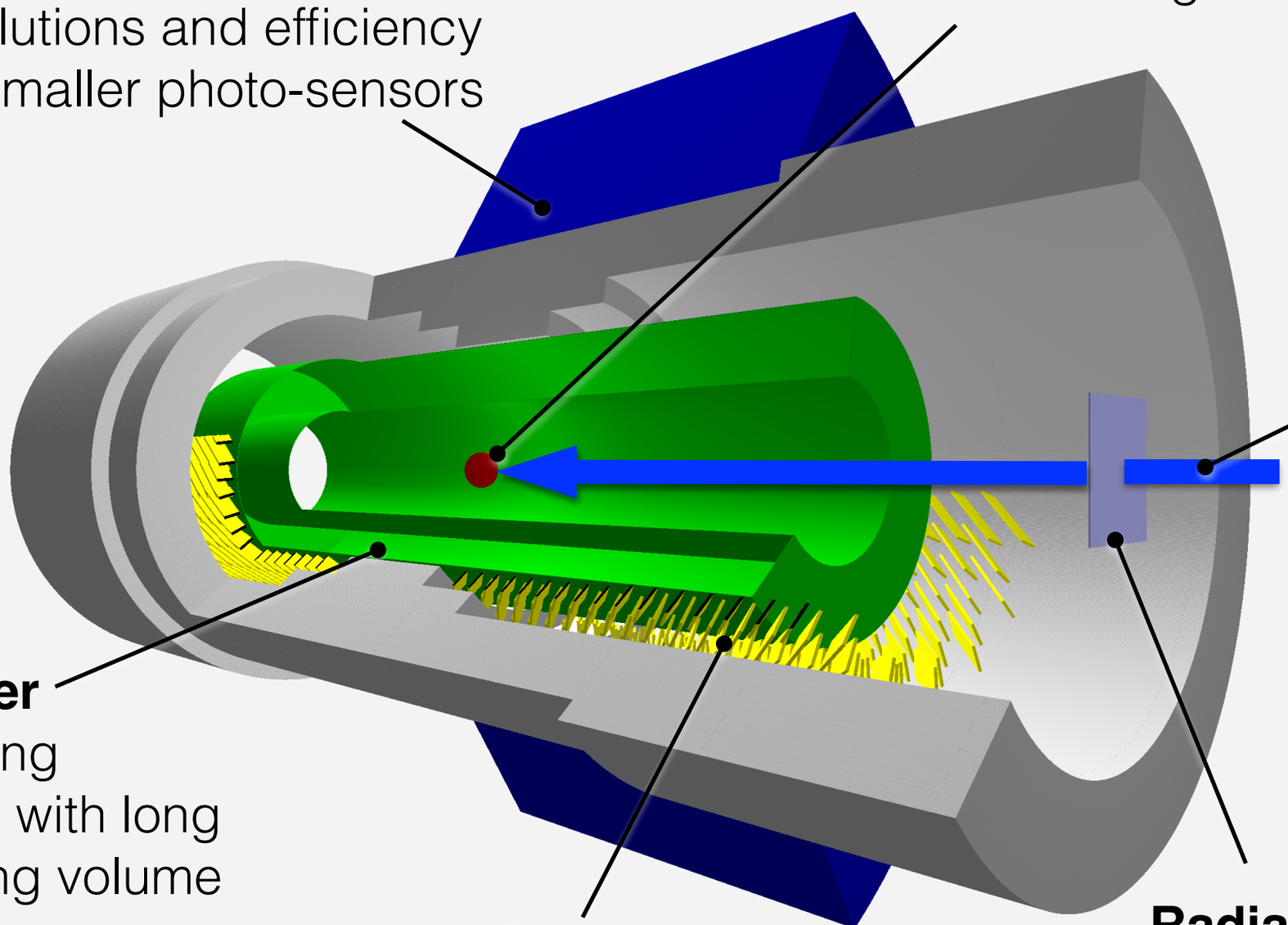

Muon Beam
More than twice intense beam

Drift chamber
Higher tracking performance with long single tracking volume

Timing Counter
Higher time resolution with highly segmented detector

Radiative Decay Counter*
Identify gammas from muon radiative-decays

Calorimeter upgrade concept

Present

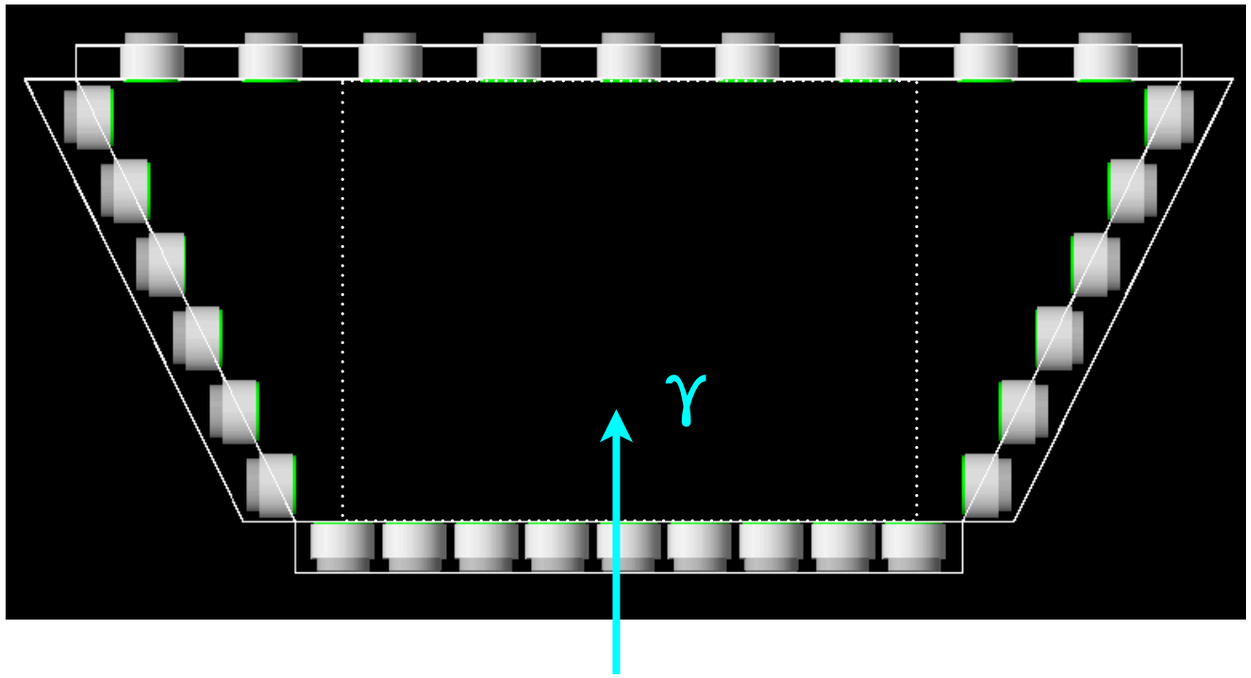

Inner face,
2” PMT → SiPM

- Better uniformity
- Precise position
- Higher detection efficiency

Upgraded

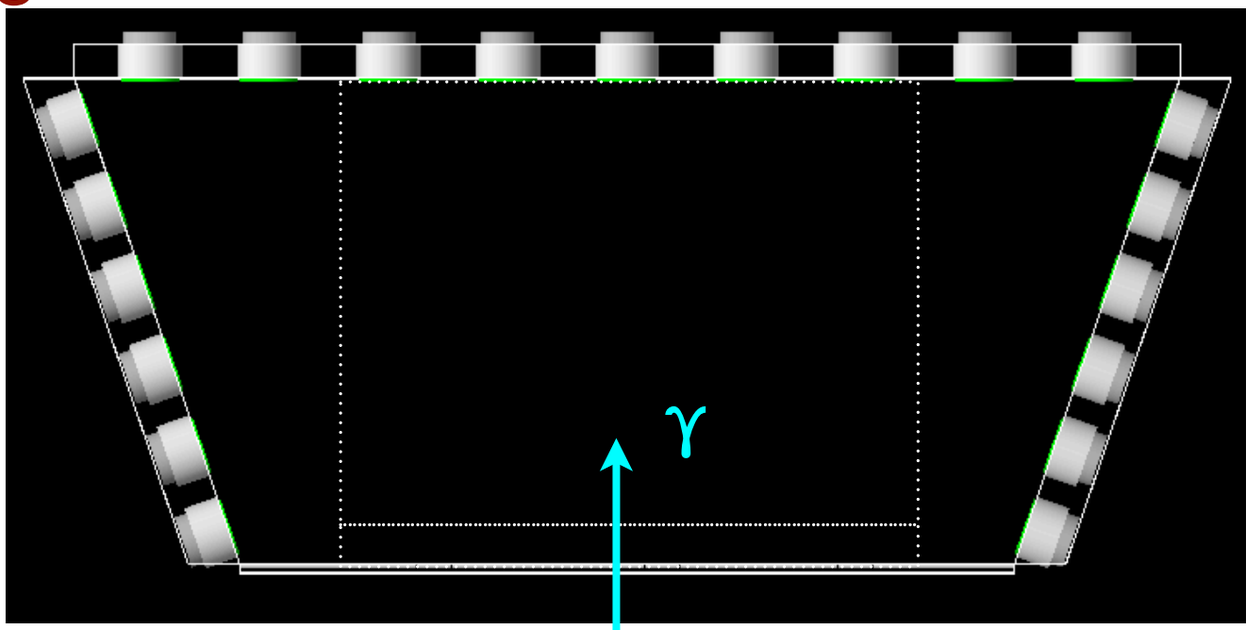

Slant angle of lateral PMT

- Better uniformity

Wider inner face

- Reduce energy leakage

Calorimeter upgrade concept

Present

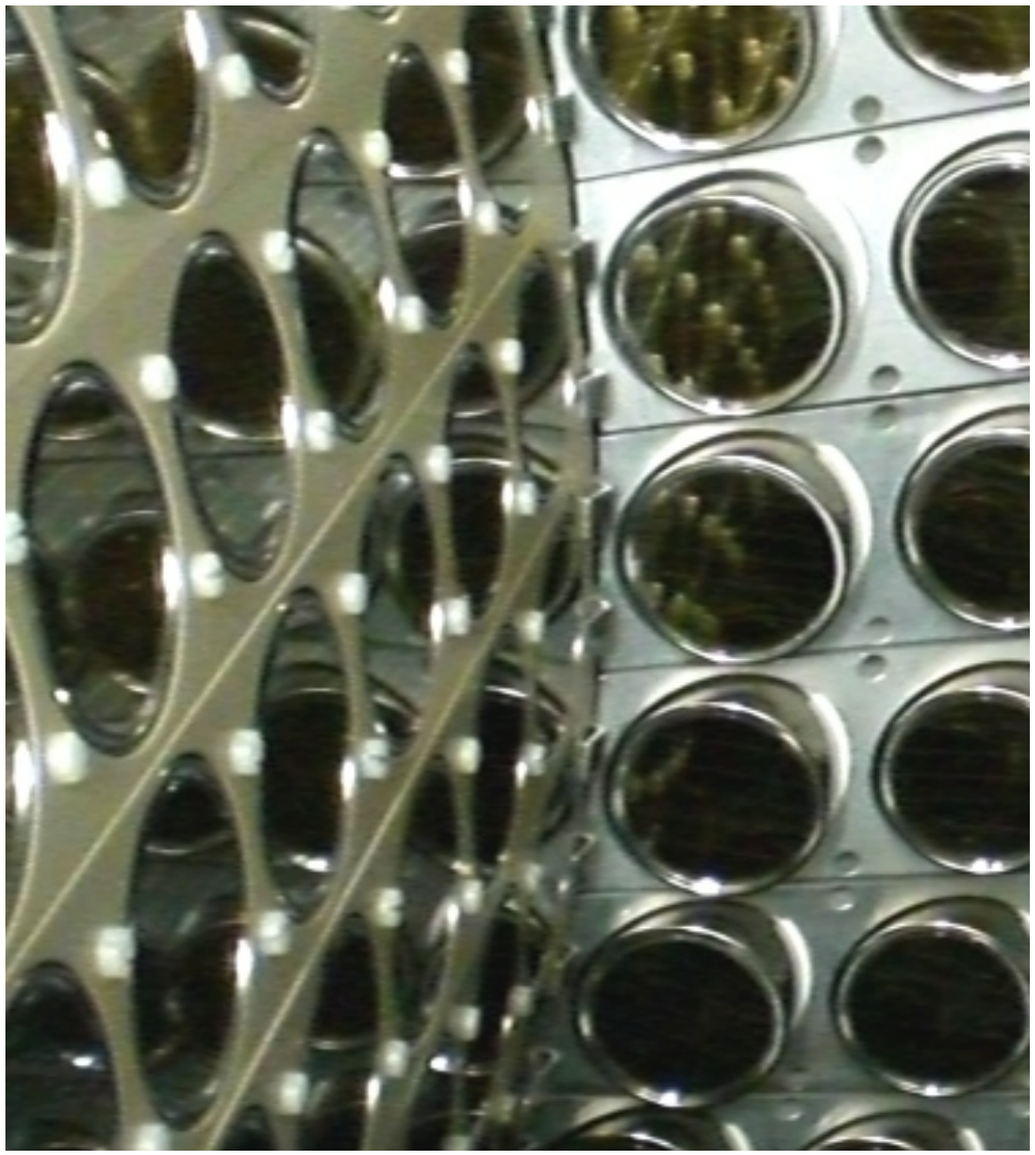

2 inch PMT
216 ch

Upgraded

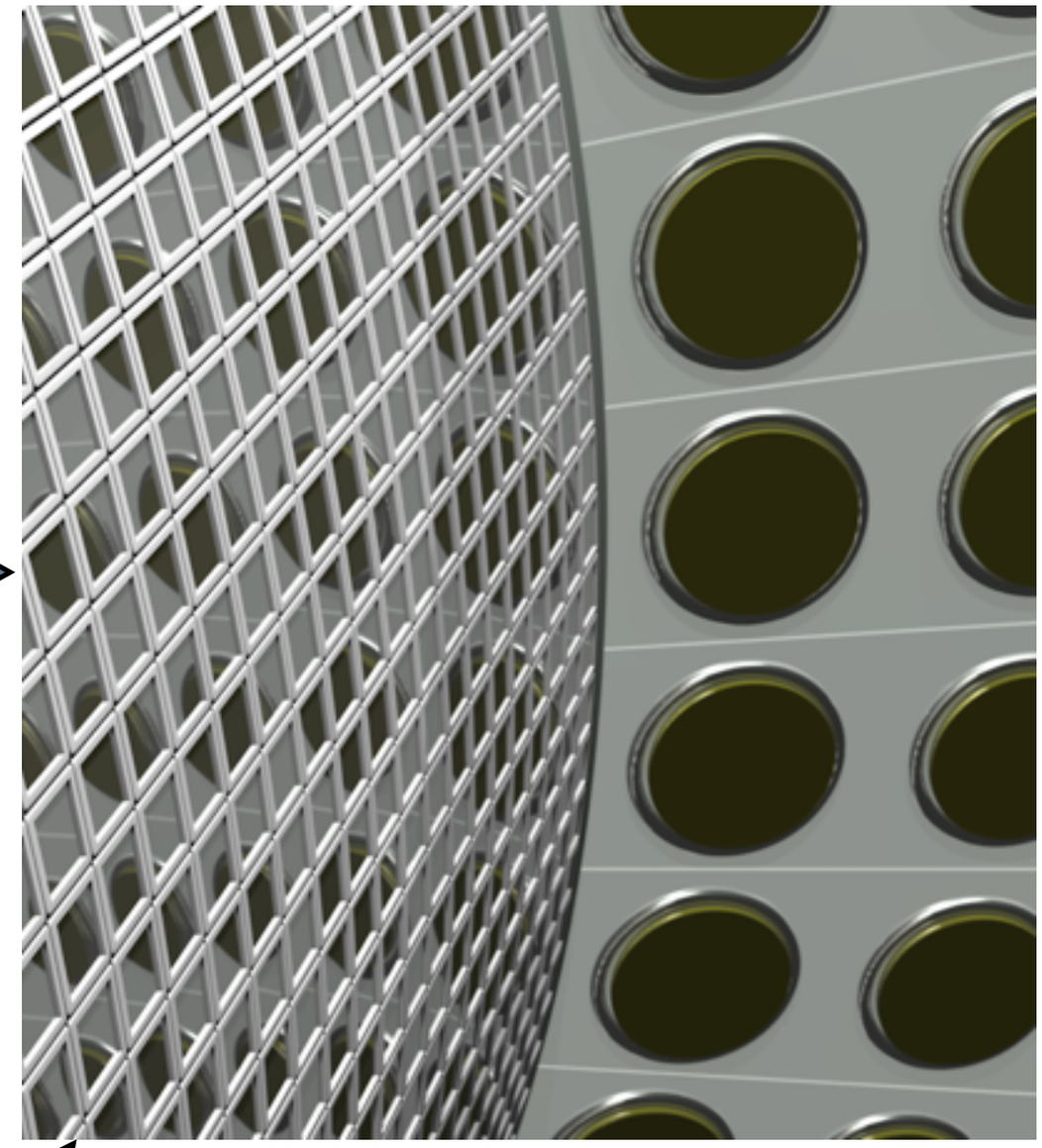

computer graphics

12×12 mm^2 MPPC
~ 4000 ch

MEG II calorimeter expected resolutions

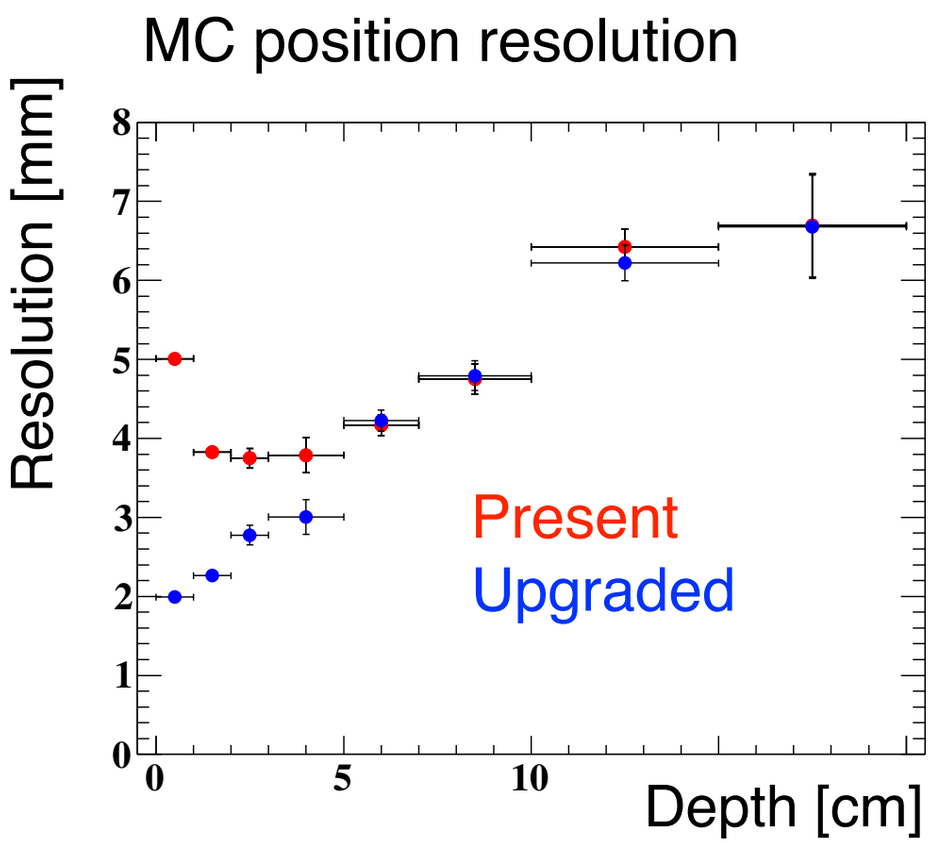

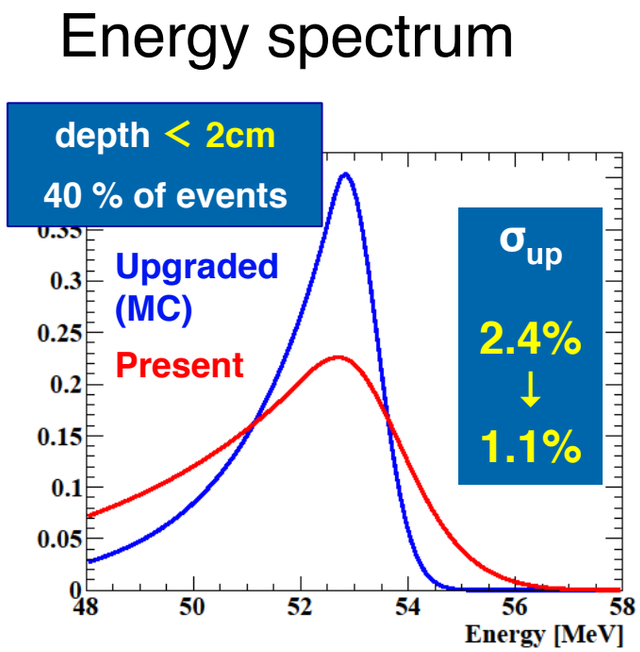

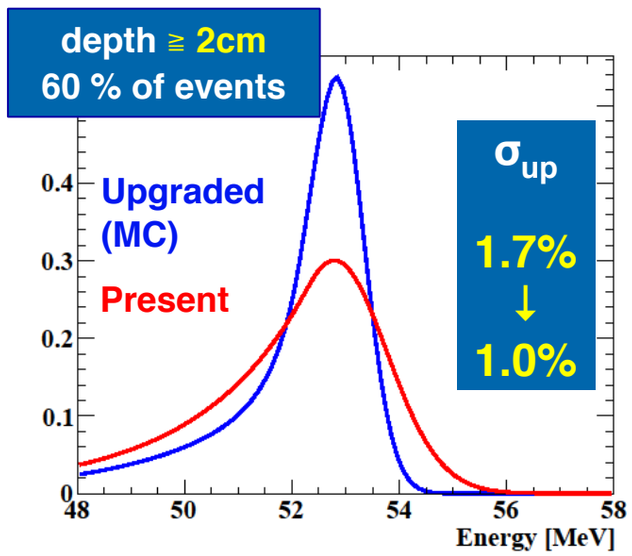

shallow events

deep events (d > 2cm)

	MEG	MEG II
Energy resolution [%]	2.4 / 1.7	1.1 / 1.0
Position resolution [mm]	5 / 5	2.6 / 2.2
Efficiency	63	69

horizontal

vertical

VUV-sensitive MPPC

We developed **VUV-sensitive MPPC** with Hamamatsu
model : S10943-3186(X)

- **Sensitive to LXe scintillation light**, λ~175 nm
  - No protection layer, thinner insensitive layer
  - Optimized optical property of the surface
- **Large sensitive area, 12×12 mm²**
- **50 μm** pixel pitch : ~**47–56k pixels** in each package
- Metal quench resister suitable for the low temperature use
- **Four segments** in each package
  - Possible to read each segment separately or to connect them outside of the package
- Thin **quartz window** for protection
  - Open space between the window and MPPCs to allow LXe enter the space
- Different gaps (0.5, 1 or 1.5 mm) to test possibility of discharge due to some conductive dusts floating in LXe.

The first batch of the product delivered in this March

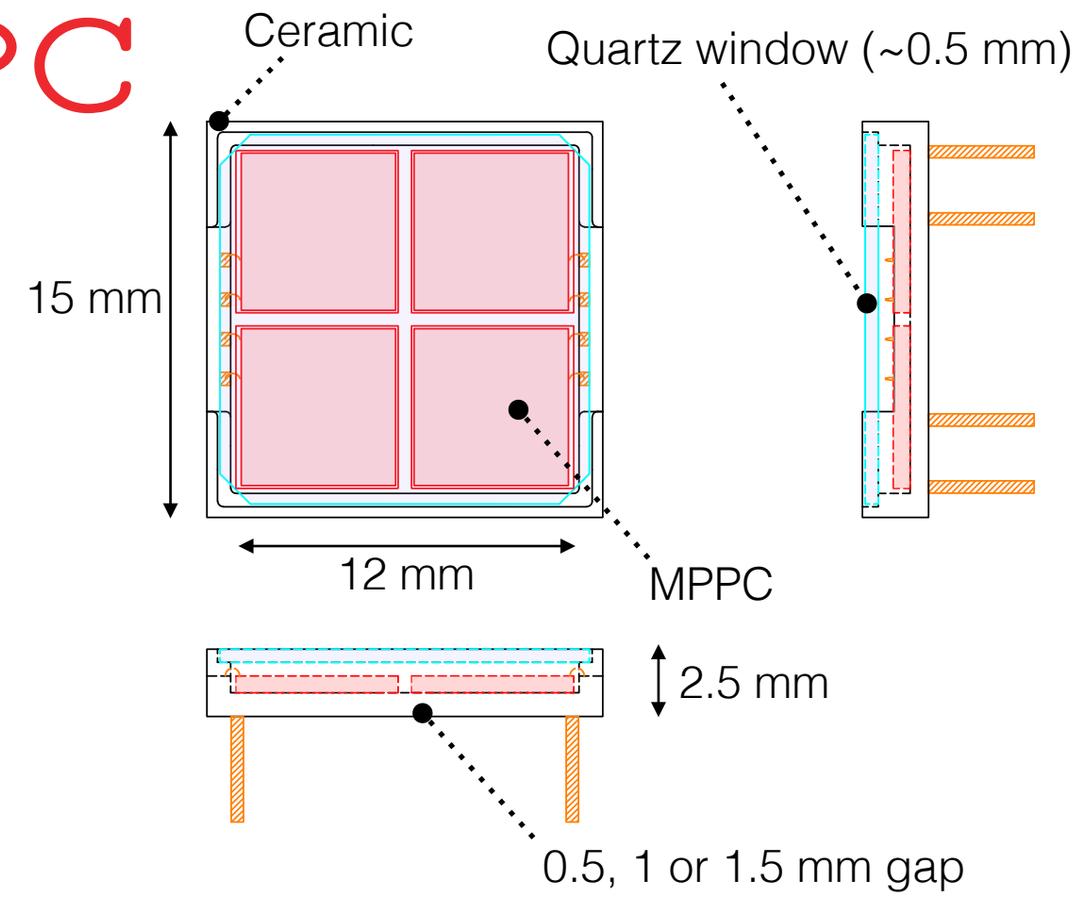

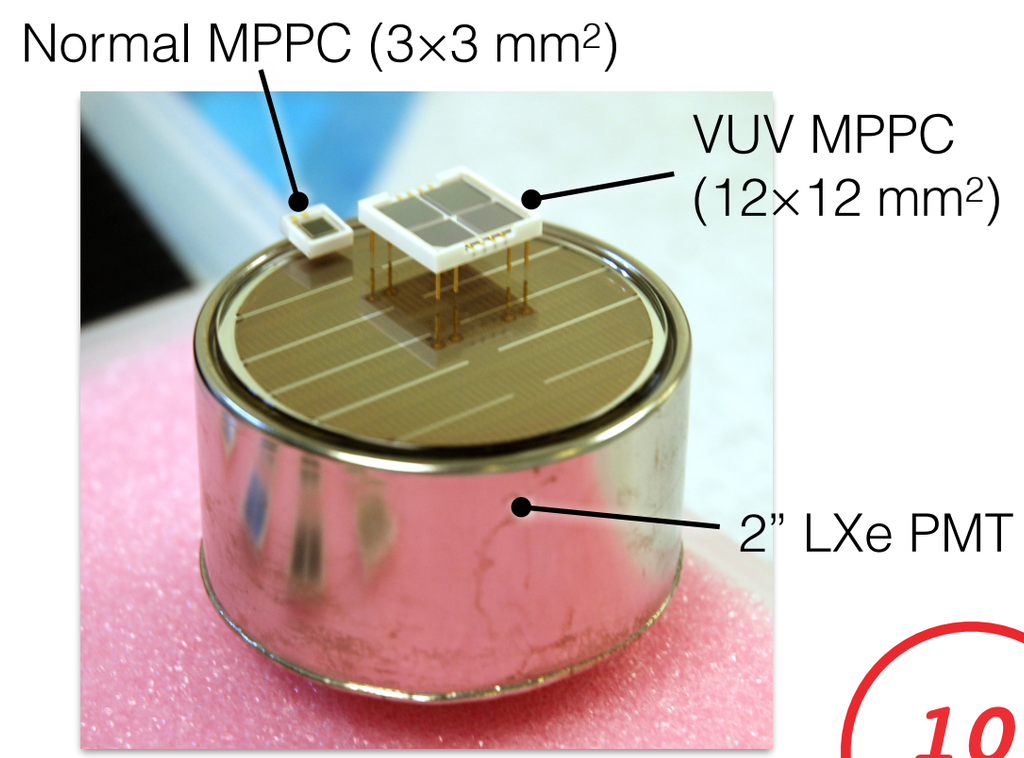

MPPC tests in small LXe chamber

- We check the performance of test-samples produced by Hamamatsu photonics
  - 2 litter cryostat to liquefy xenon
  - About 10 samples installed in the cryostat
  - LED and ^{241}Am as light sources
  - Measure properties
    - PDE, gain, single p.e. resolution, time resolution, noise rate…

Prototype MPPC samples

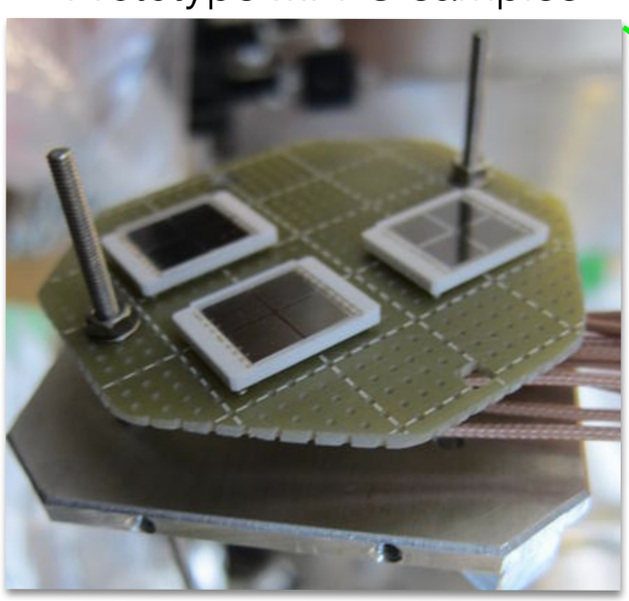

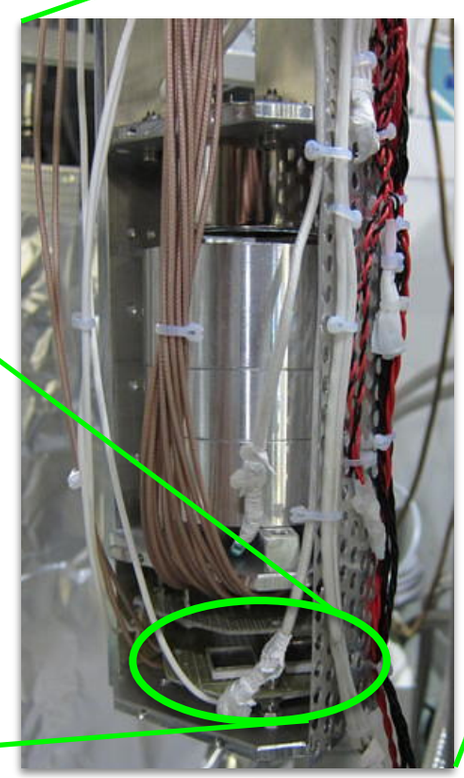

VUV-sensitive MPPC- Performance

- Good gain uniformity
  - **Single photo-electron peak is visible**.
- **VUV sensitivity confirmed**
- Dark noise is suppressed in LXe temperature
- **Long waveform** due to large sensor-capacitance can be an issue for high-rate measurement (pileups).

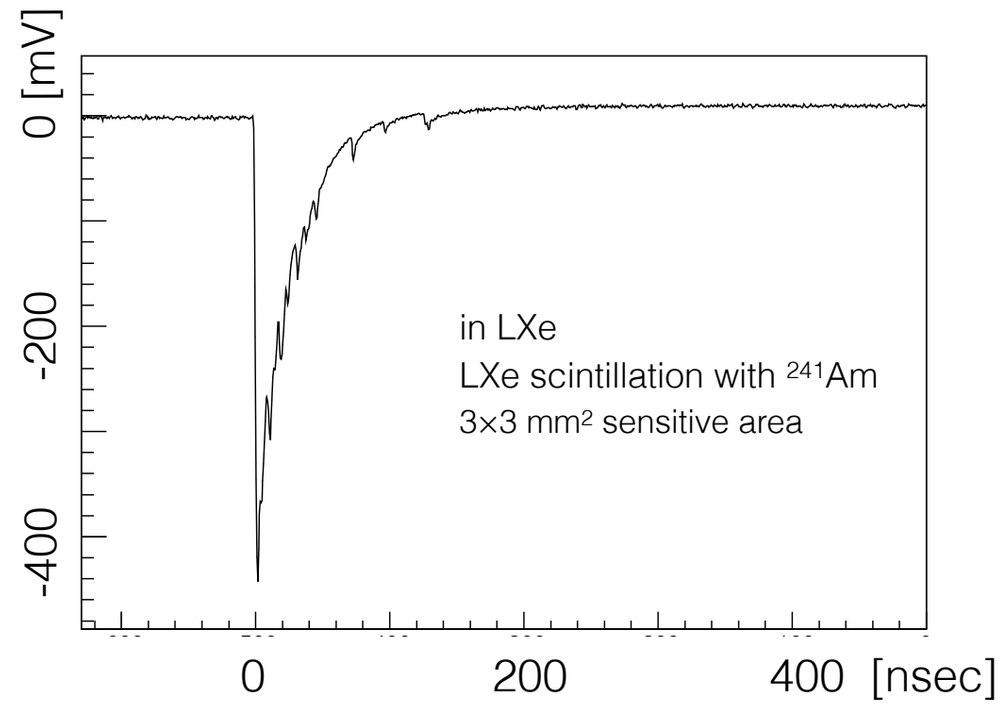

Gain	3×10^5
PDE @ 175nm	15 ± 3 %
Dark rate	~ 150 Hz
Crosstalk	35%
Afterpulse	10%
Signal decay time	30 ns

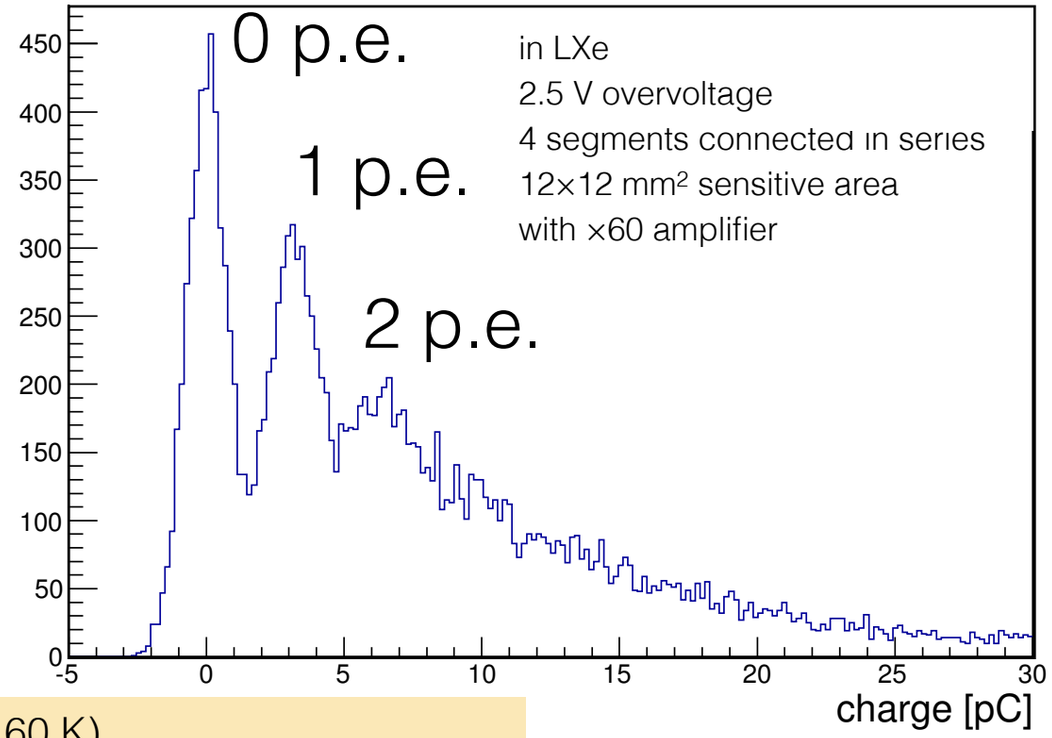

in LXe (~160 K)
with 2.5 V overvoltage
when connected 4 segments in series
12×12 mm^2 sensitive area

MPPC connections

Parallel connection

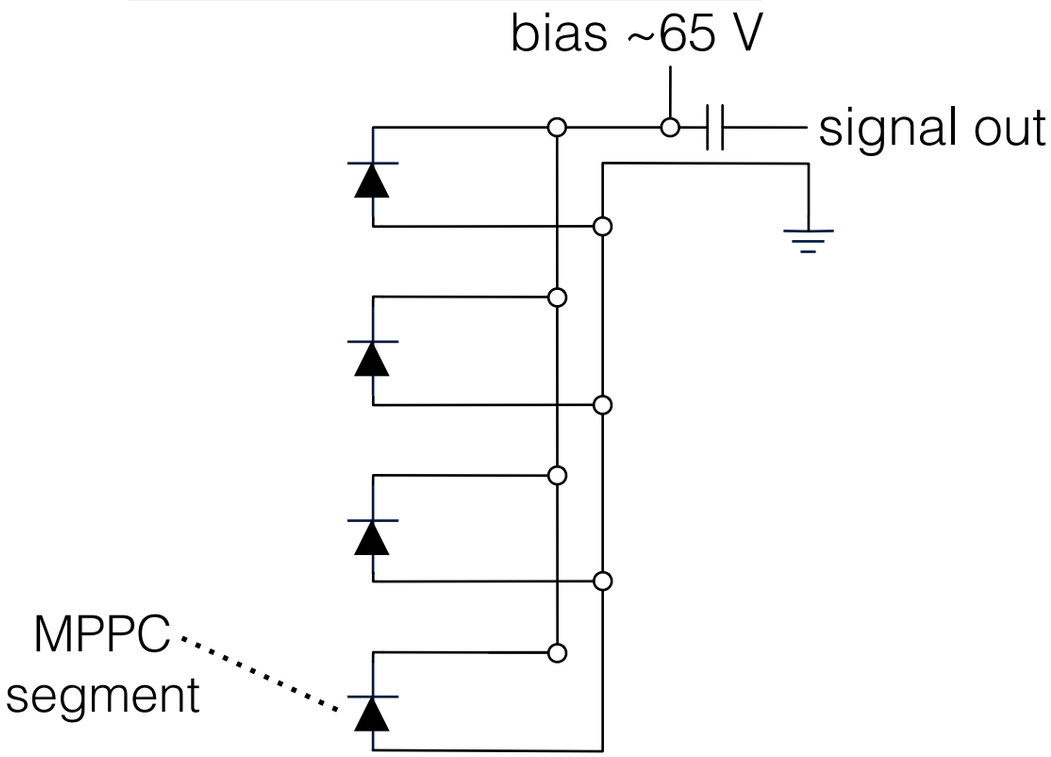

- Equivalent to a single large MPPC
- Common bias voltage (~65 V)
- ☹ Large capacitance →Long waveform

Series connection

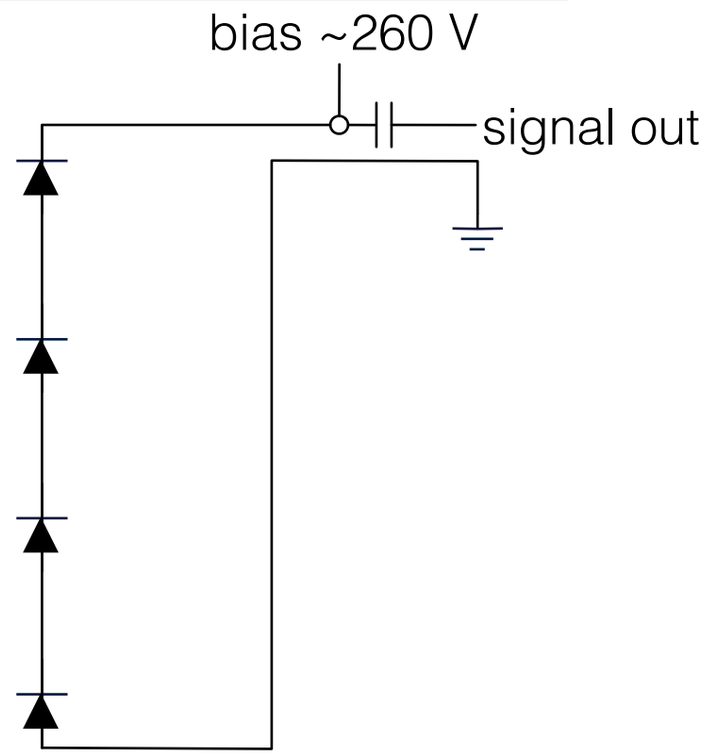

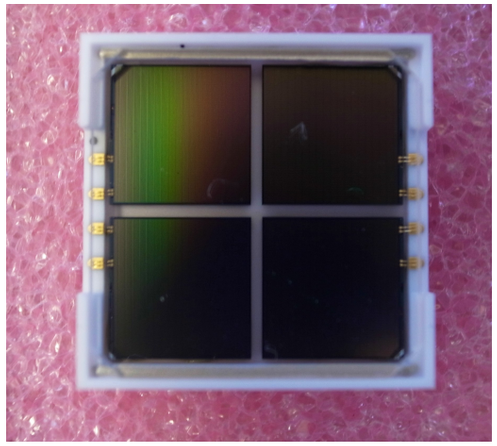

- High bias voltage (~260 V)
- ☹ Different electric potential → possibility of discharge
- ☺ Same over-voltage automatically
- ☺ Small capacitance →Short waveform

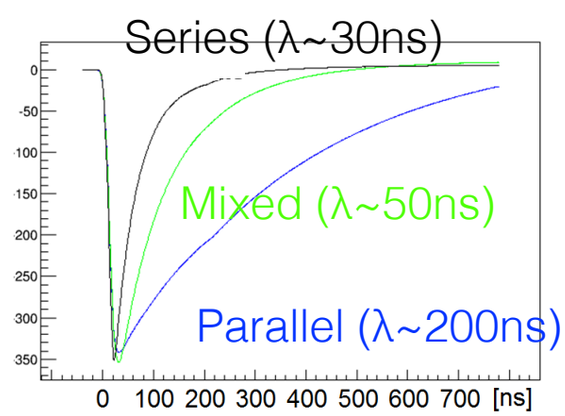

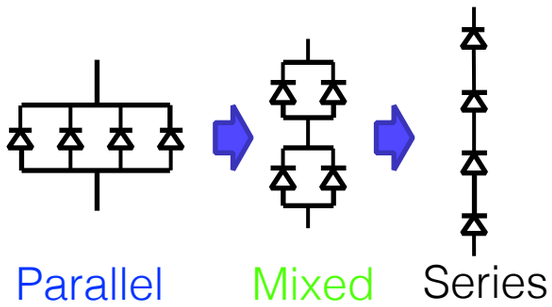

“Hybrid” connection

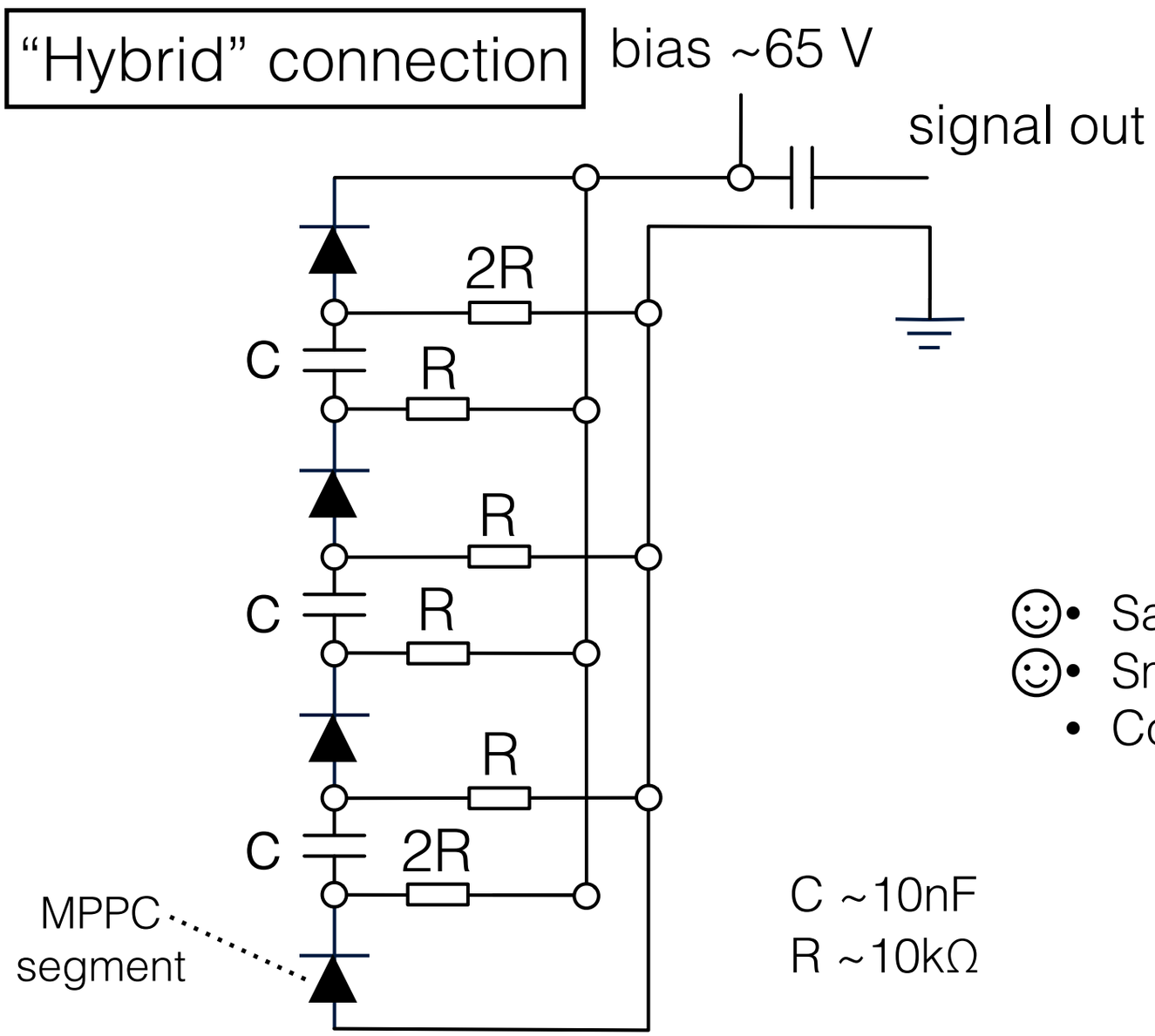

C ~10nF
R ~10kΩ

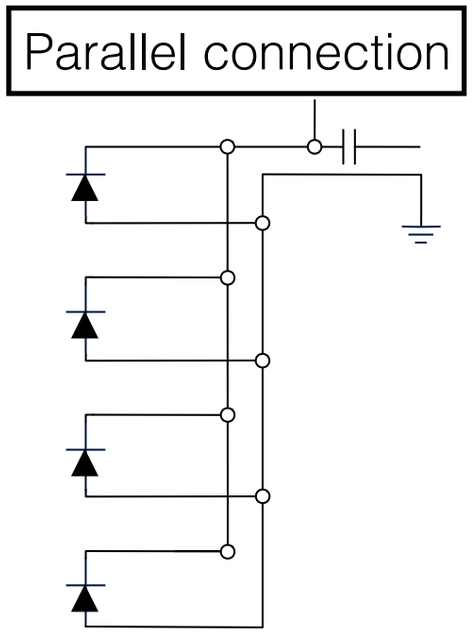

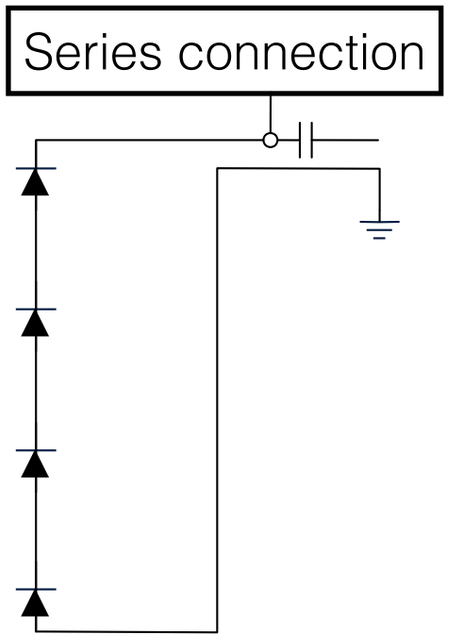

- ☺ Same potential on the surface of MPPCs
- ☺ Small capacitance →Short waveform
- Common bias voltage (~65 V)

“Hybrid” connection

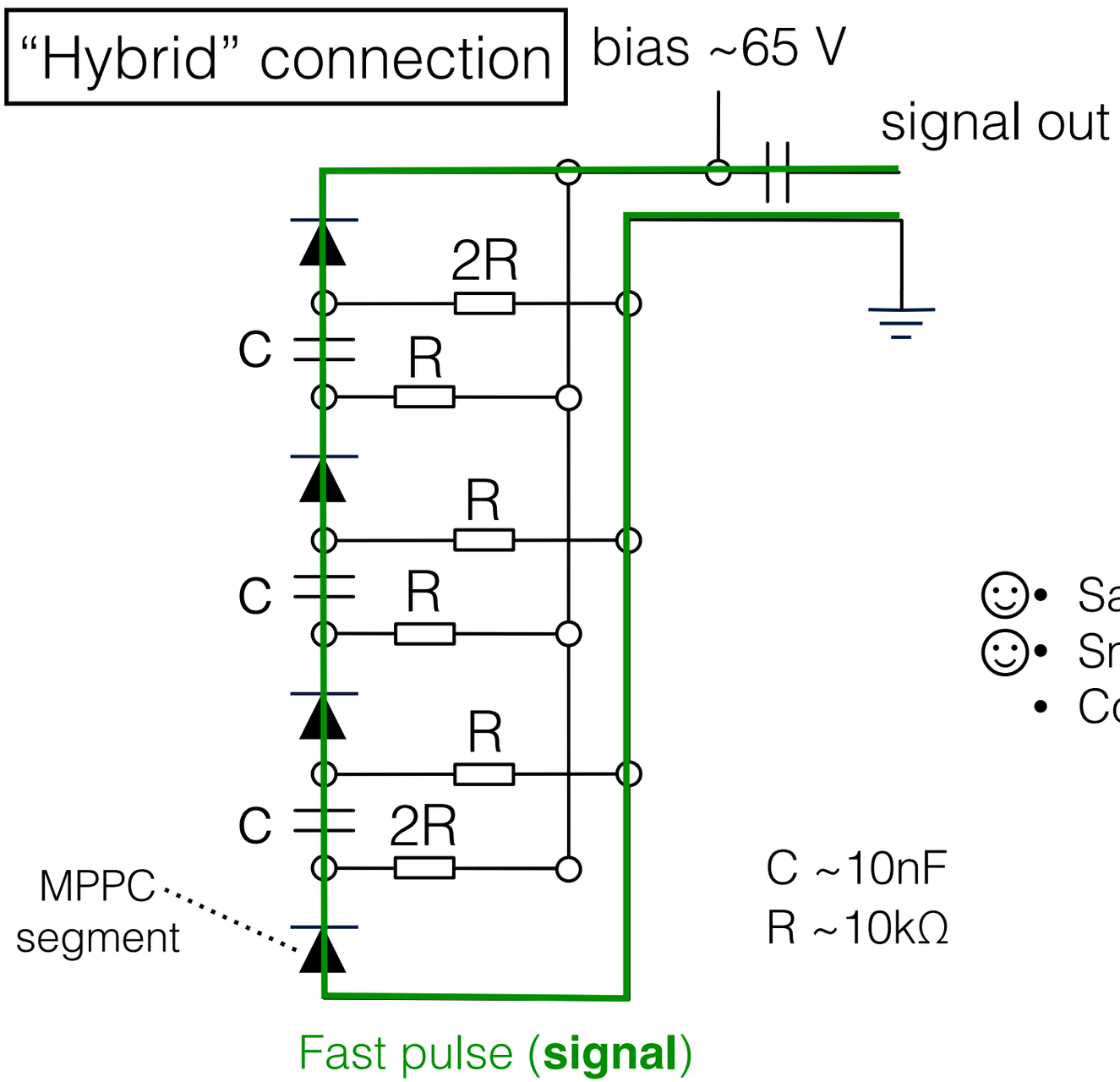

C ~10nF
R ~10kΩ

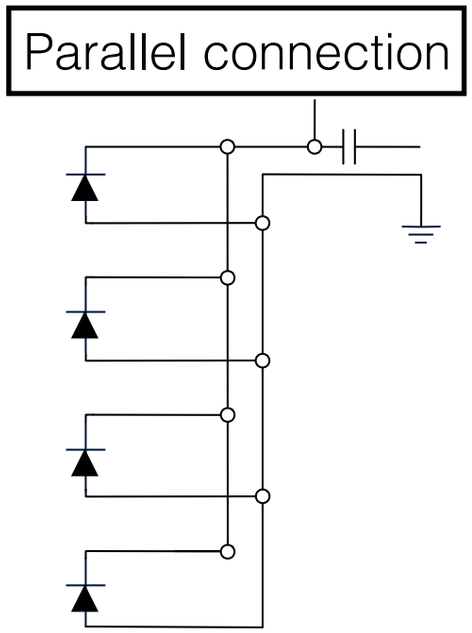

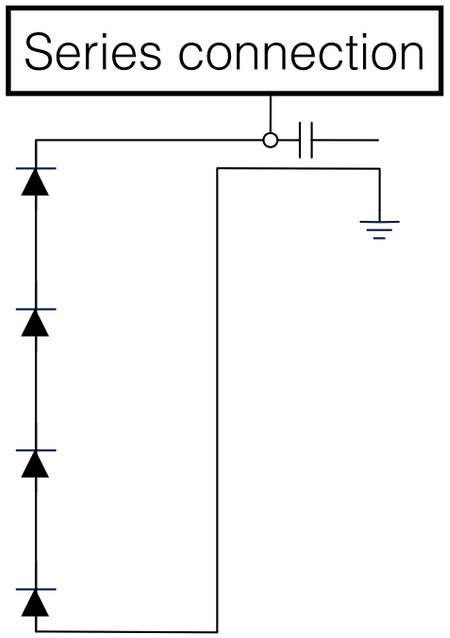

- ☺ Same potential on the surface of MPPCs
- ☺ Small capacitance →Short waveform
- Common bias voltage (~65 V)

“Hybrid” connection

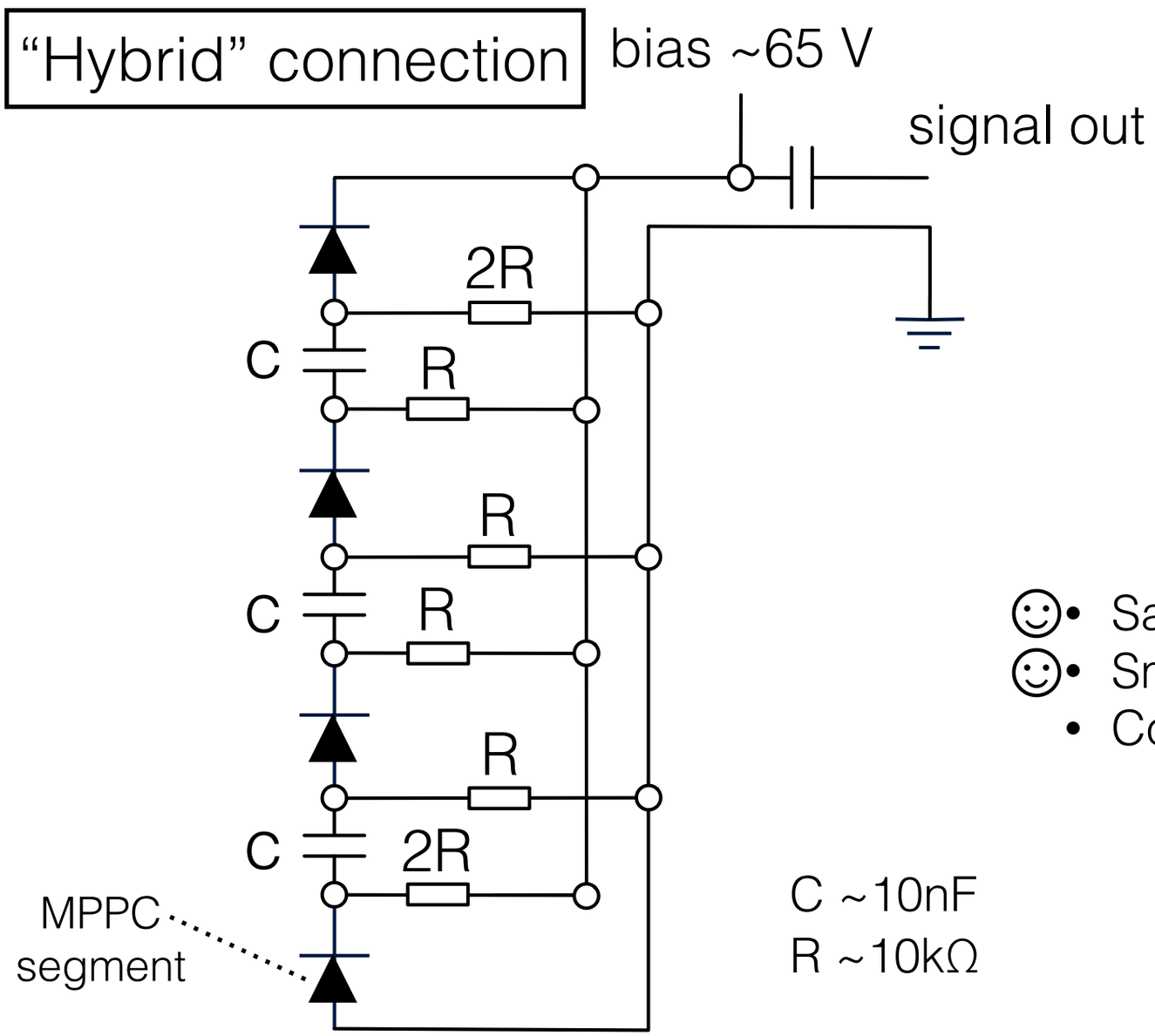

C ~10nF
R ~10kΩ

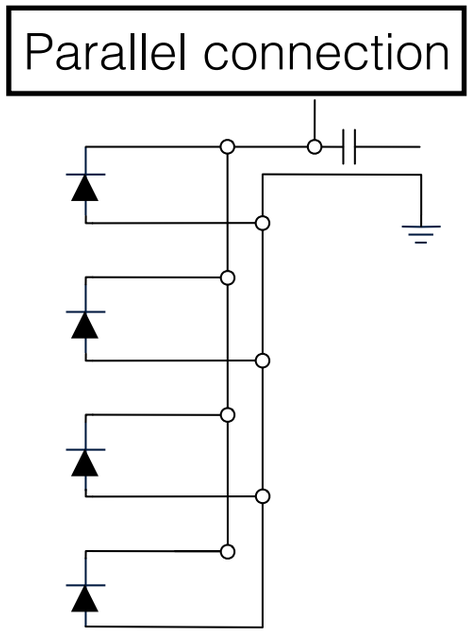

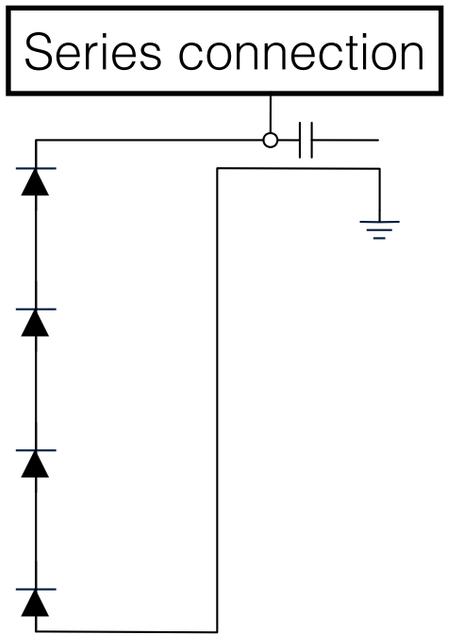

- ☺ Same potential on the surface of MPPCs
- ☺ Small capacitance →Short waveform
- Common bias voltage (~65 V)

“Hybrid” connection

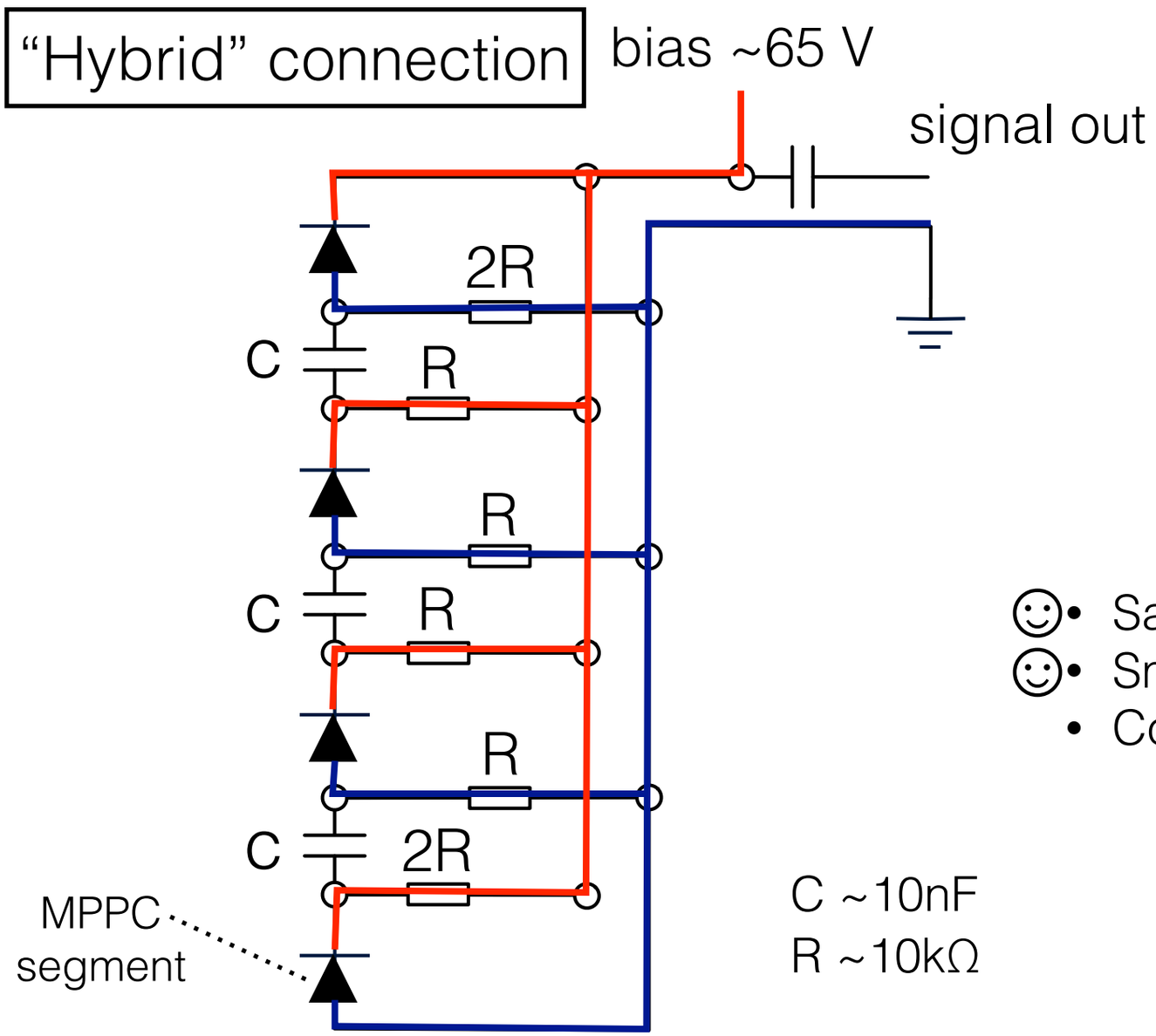

C ~10nF
R ~10kΩ

Constant voltage (**ground**, **bias**)

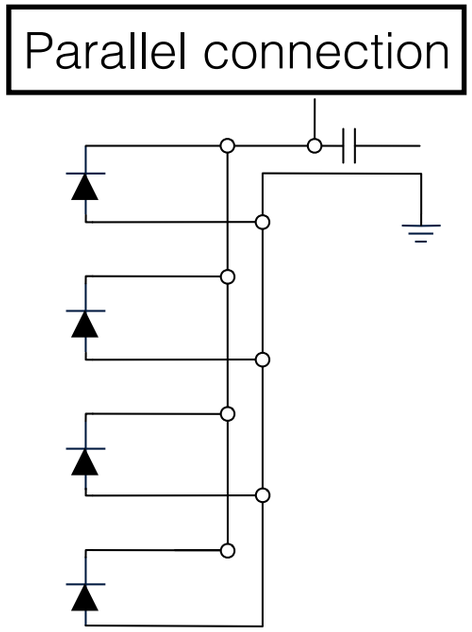

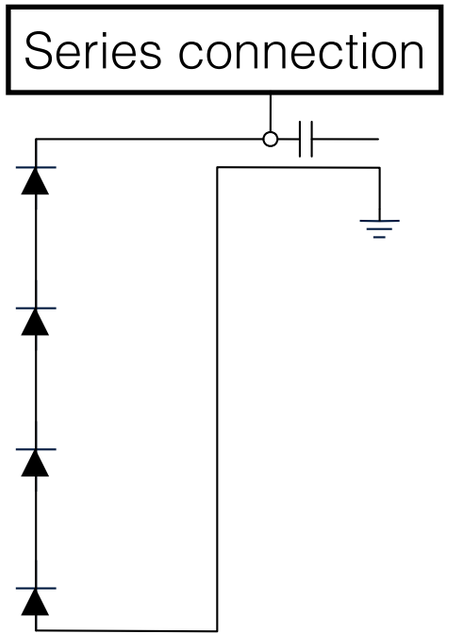

- ☺ Same potential on the surface of MPPCs
- ☺ Small capacitance →Short waveform
- Common bias voltage (~65 V)

“Hybrid” connection

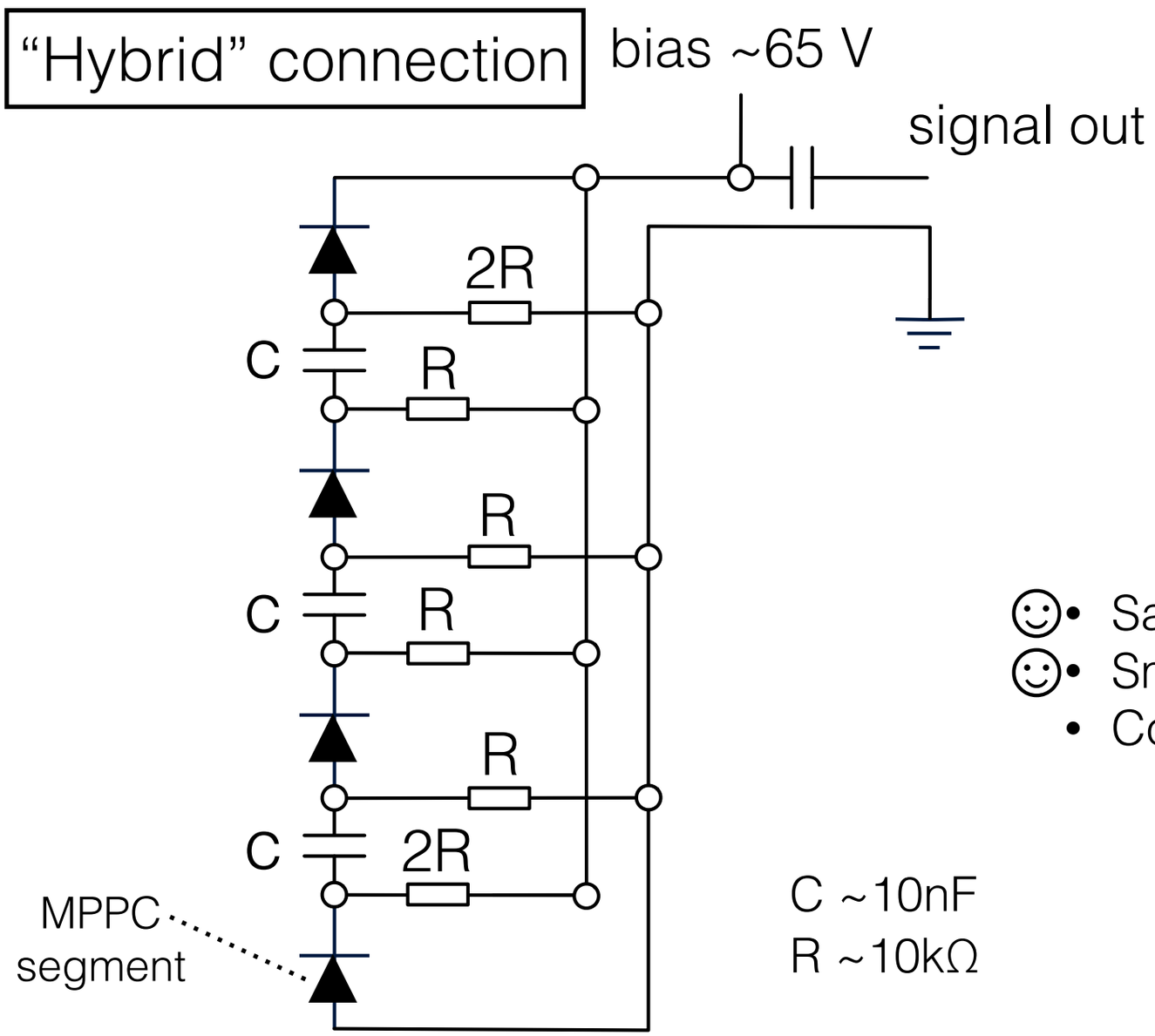

C ~10nF
R ~10kΩ

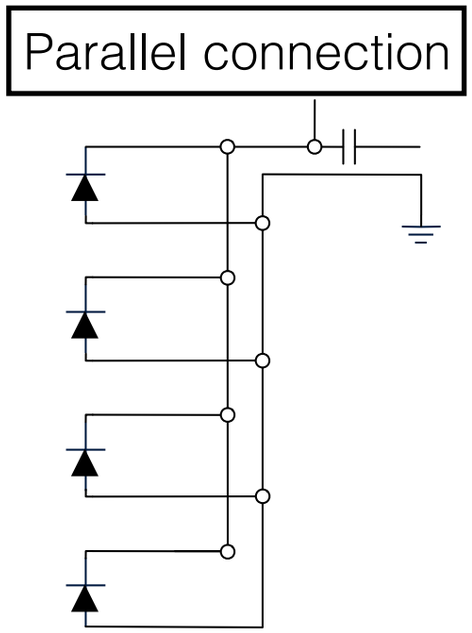

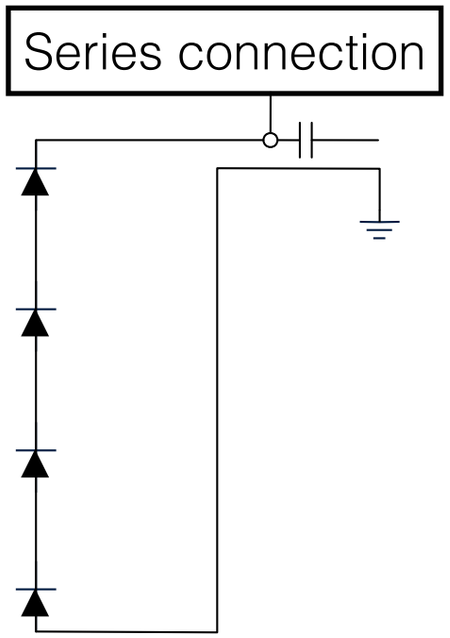

- ☺ Same potential on the surface of MPPCs
- ☺ Small capacitance →Short waveform
- Common bias voltage (~65 V)

Mass production and tests

- First mass-production of **600 MPPCs**
- We will first test them in room temperature.
  - Check distribution of **breakdown-voltage, gain, dark-count** and so on.
  - Test **each segment** separately.
  - A PCB which can mount 16 MPPCs (i.e. 64 segments) was prepared
    - Measures **8 segments at once**
    - **Switching the segments** with using high-frequency relays

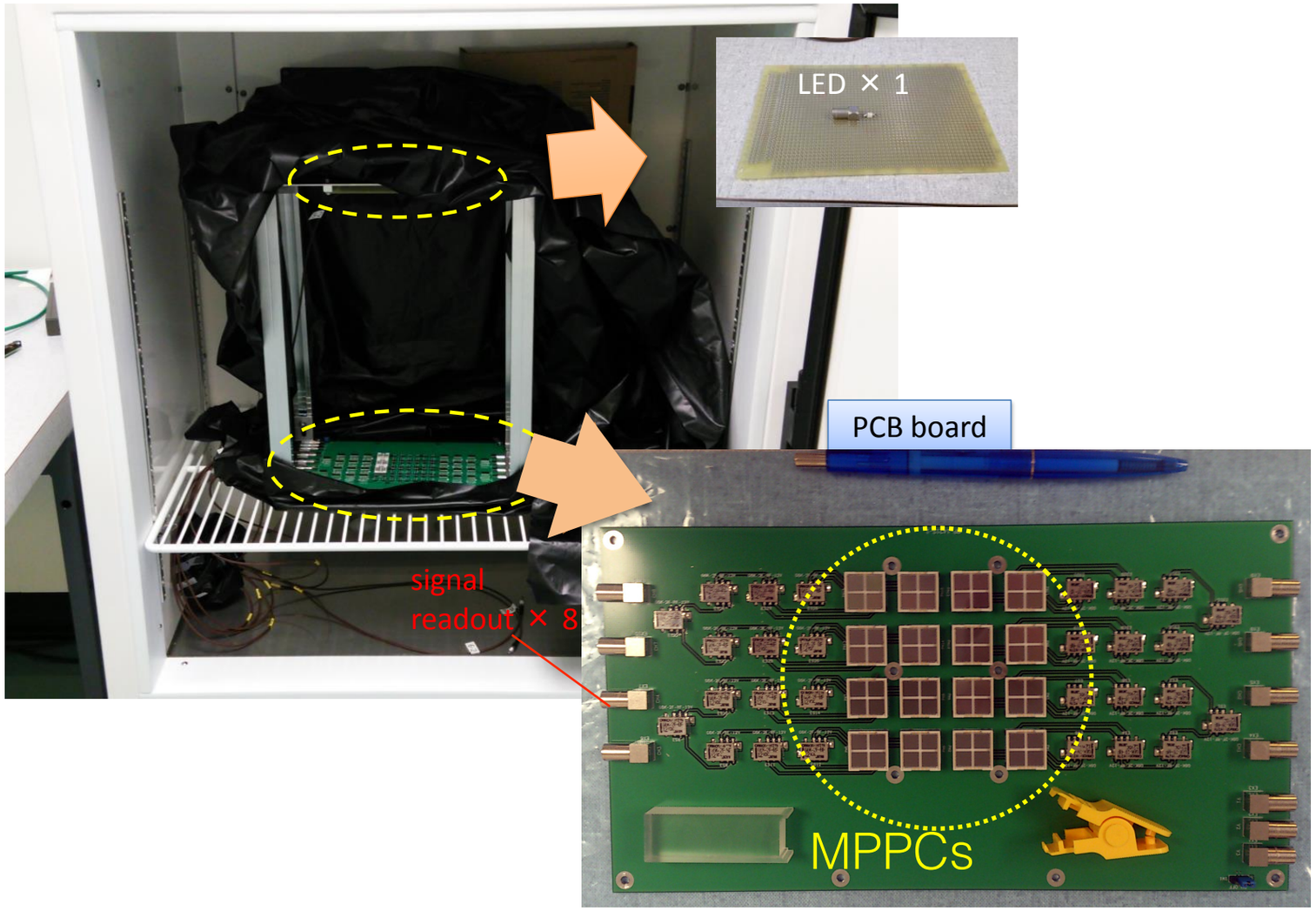

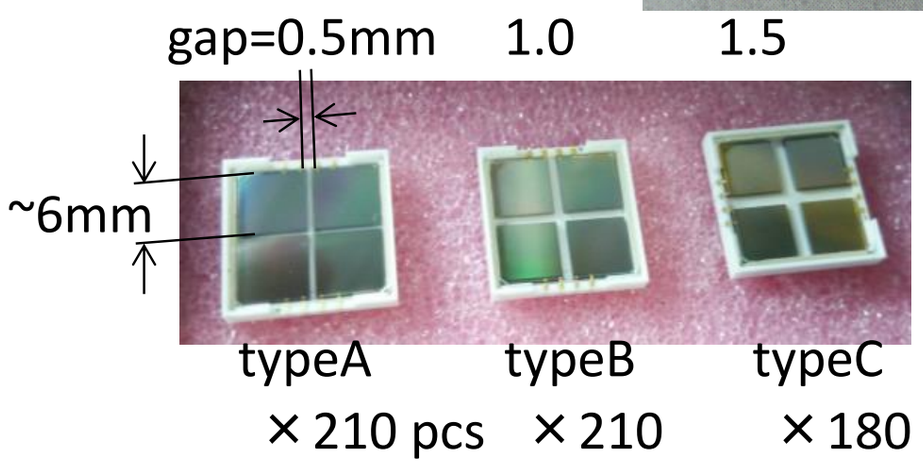

Prospects

- Test of 600 MPPCs for a prototype LXe detector
  - In room temperature
  - In small LXe chamber for a few samples
- Test of the performance in a large prototype chamber
  - MPPC test with “hybrid” connection
  - Check the optical properties of MPPC (e.g. angular dependence of PDE)
  - Possibility of a beam test (55 MeV γ) to measure resolutions
- Design and construction of the final detector by 2016

Large LXe cryostat (~100 litters)

Summary

- Upgrade concept of MEG LXe calorimeter
  - Improved layout of PMTs
  - Replacing PMT on the inner wall with VUV-sensitive MPPCs
  - Improvement of the energy and position resolutions at shallow part of the detector is expected.
- VUV-sensitive MPPC development
  - Tested and verified the operation in LXe and the sensitivity to VUV photons
  - 600 MPPCs are produced
- MPPC segments connection
  - Long signal pulse due to the large capacitance can be shortened with using “hybrid” connection

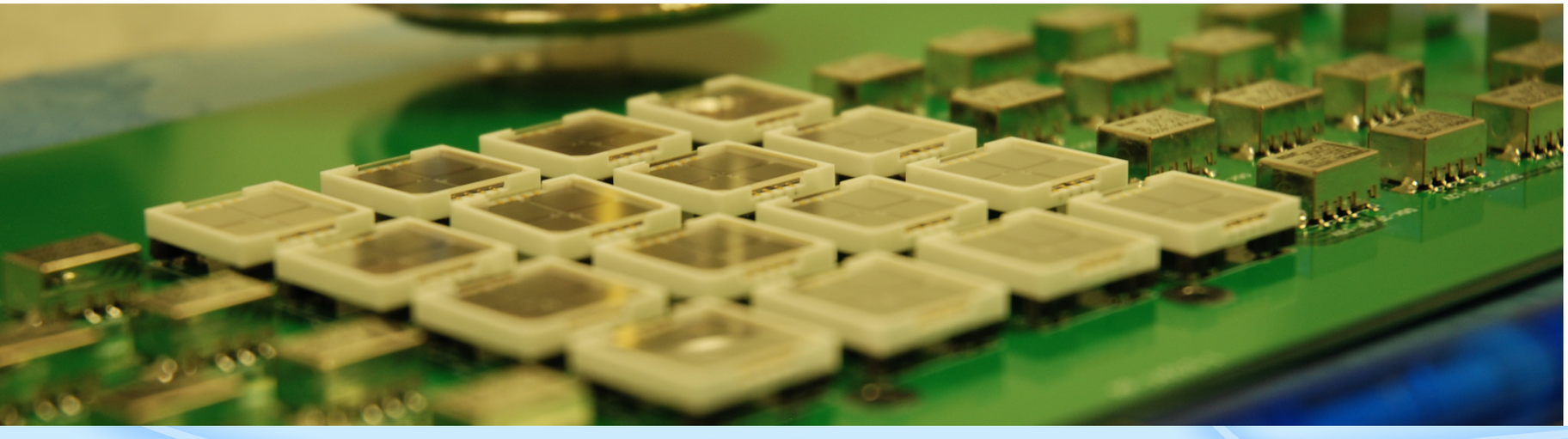

Back up