# Horns for NuMI, NOvA and LBNE

- Horn 1 Assembly

- Horn 2 Assembly

# Horn design for NuMI, NOvA and LBNE

NuMI/MINOS design:

400 kW beam; 1.87 seconds design cycle time, but ran 2 seconds
200 kA horn current, 2.3 milli-second half-sin-wave pulse width

NUMI/MINOS -- > NuMI/NOVA

Repetition rate (0.5 Hz -> .75 Hz): more Joule heating
Beam power (400 kW -> 700 kW): increased heating of outer conductor
Target no longer inside horn, moderates inner conductor heating

Modifications:

- Reduce outer conductor thickness to compensate beam heating ( 1" -> 5/8")
- Add water cooling near strip-line connections
- Move strip-line flex section to larger radius to reduce beam heating
- Horn 1 "crosshair" changed from Aluminum to Beryllium
- Horn 2 moved, starts ( 10 m -> 19.2 m ) downstream of start of Horn 1

NuMI/NOVA -- > LBNE 700

Same rate & beam power
Target moves back into horn, increasing inner conductor heating

Reference design same as NOVA. Possible Modifications:

- Horn 2 starts ( 10 m -> 6.6 m ) downstream of start of Horn 1
- Will explore going to higher current
- Will investigate re-optimizing inner conductor water spray
- Will investigate other variations if funding becomes available

# NUMI horn operation summary

*61 million pulses over 7 years to May 1, 2012*

| | Start | End | Pulses (Million) | Failure mode | Modification for subsequent horns |
|---|---|---|---|---|---|
| HORN 1 | | | | | |
| PH1-01 | 3/2005 | 6/2008 | 24 | Suction line broke near electrical insulator | Thicker steel at transition to insulator |
| PH1-02 | 6/2008 | | 36 | OK | |
| HORN 2 | | | | | |
| PH2-01 | 3/2005 | 12/2008 | 28 | Strip-line fractured after high-strength steel washer broke due to hydrogen embrittlement | Use lower strength stainless steel washers |
| PH2-02 | 12/2008 | | 32 | OK | |

# NuMI Horn Status

Next two slides re-iterate reasons why horns PH1-01 & PH2-01 were replaced in 2008

See NBI 2010 horn talk for previous repairable problems

**Zero problems since then**

*However, did detect smell of rotten eggs when Horn 2 filter was replaced in May.*

*This is first time for such a report, and we do not have an explanation … ??*

Plan to continue to use Horn PH2-02 for the 700 kW NOVA run starting next year.

*Horn 2 has been moved 9 m further downstream, as requested by NOVA, to obtain a neutrino spectrum better matched to their physics.*

Horn PH1-02 will be replaced with PH1-04, built to take the increased beam power

*PH1-04 is currently being pulsed on test stand*

PH1-02, PH1-03 will be kept as emergency (400 kW) spares

# Horn 1 failure 2008

water line failed at ceramic transition

(had repaired several such failures of different water lines)

*Horn was hot enough (75 R/hr) that decided to swap horn rather than repair*

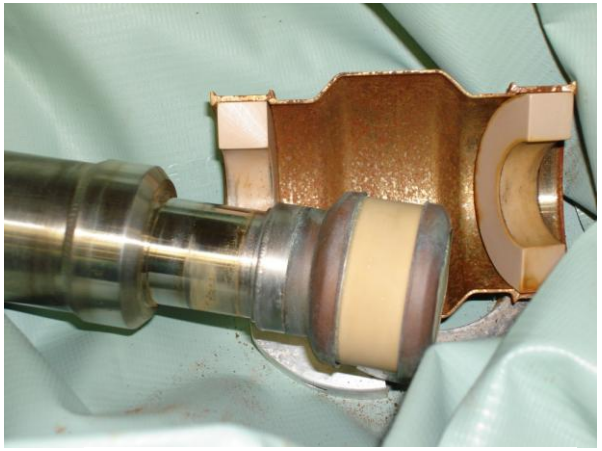

Similar failure

Switched from commercial unit to home-built

Shrink fit 316L stainless steel on to AmAlOx 68 almina ceramic

*Much thicker material*

Kovar brazed to ceramic

Zero failures with this new style

# Horn 2 failure 2008

high-strength steel washers broke due to nitric-acid induced hydrogen enbrittlement,
unrestrained strip-line eventually cracked (horn itself was OK)

*No failures since switched to lower strength washers*

In principle,
can unbolt
strip-line
and replace it

(bolt pattern
deliberately
unobstructed)

But residual
radiation
15 R/hr @ 1 ft

so would take
quite a bit
of remote
setup and work

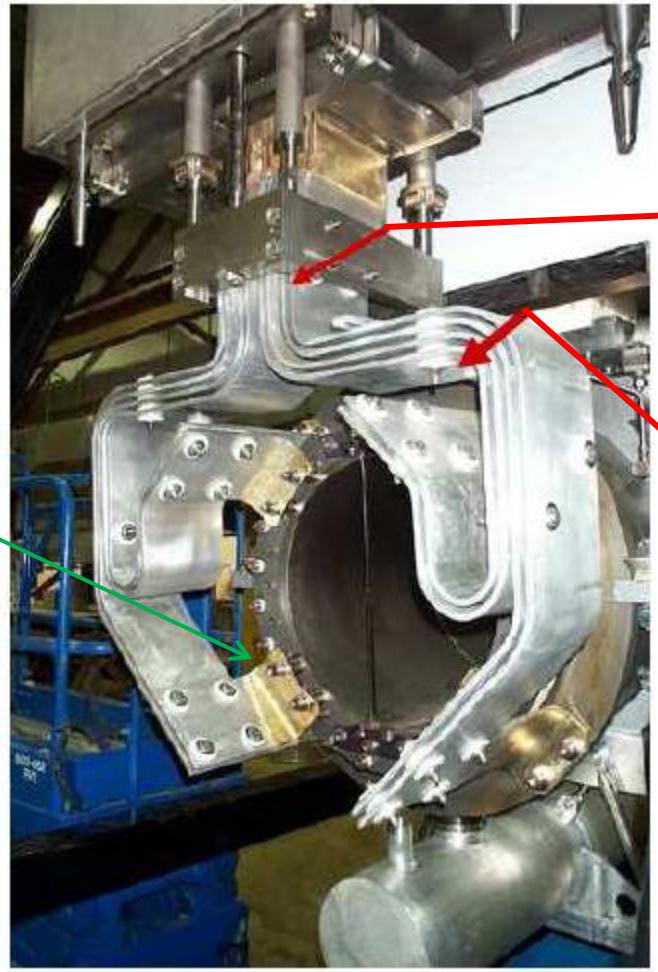

New horn strip-line

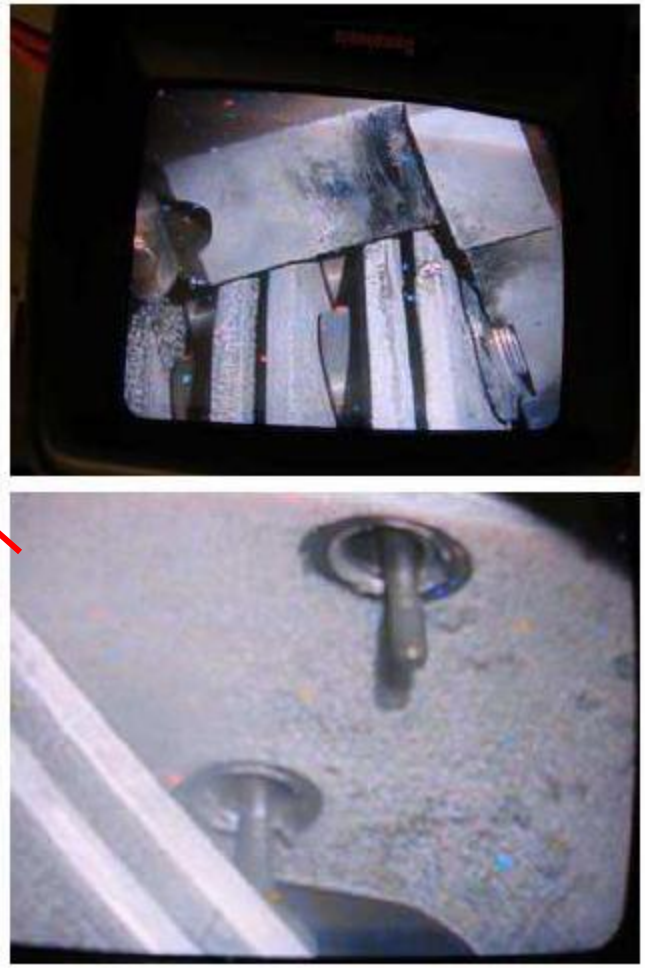

As seen 11/19/08

Argon gas purge through inside of horn –

Prevent buildup of explosive mixture from dissociation of H2O by radiation

Prevent oxidation of Nickel coating

Inner conductor Nickel coated

Mitigate erosion by water spray of softer Aluminum

- systematic error control against non-uniform current

Also reduces probability of crack propagation from surface of Aluminum

*Nickel on outside of inner conductor is corroded by the nasty target pile air, but believe inside is protected by Argon (don't see nickel flakes in RAW system filters)*

PH2-02
June
2012

D.S.
end
<-

U.S.
end
->

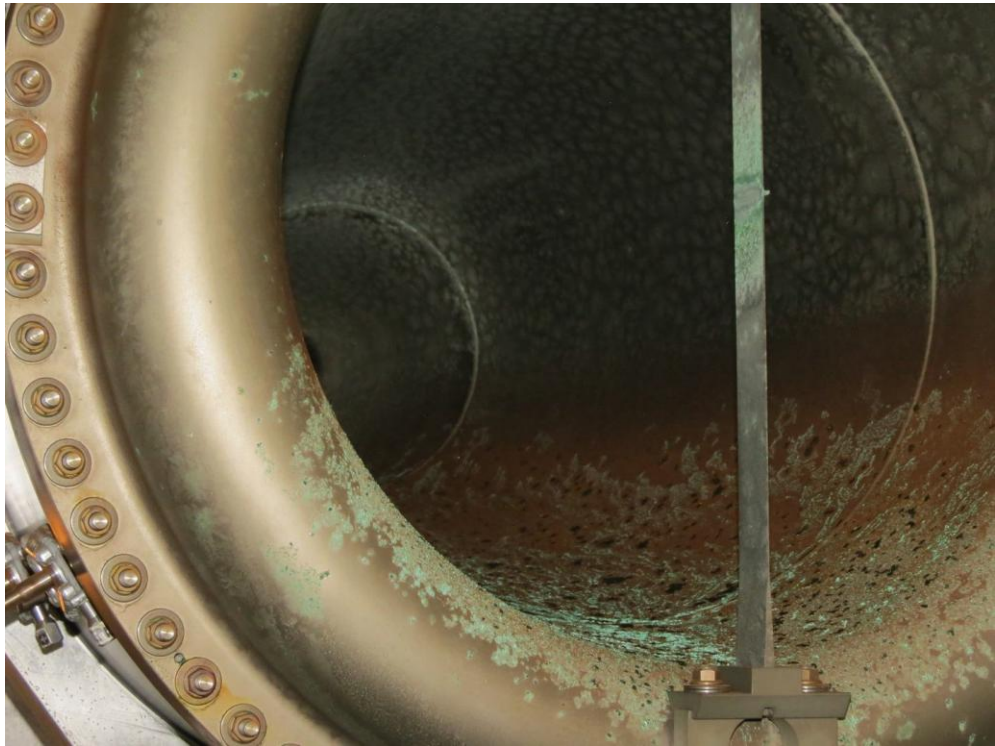

# Measured on-beam-axis magnetic leakage field in PH1-02

remotely, in place in the target pile on 6/1/2011 with 3-axis probe

A previous target rested on horn for some time – damage ?
Was a magnetic effect helping destroy targets ?

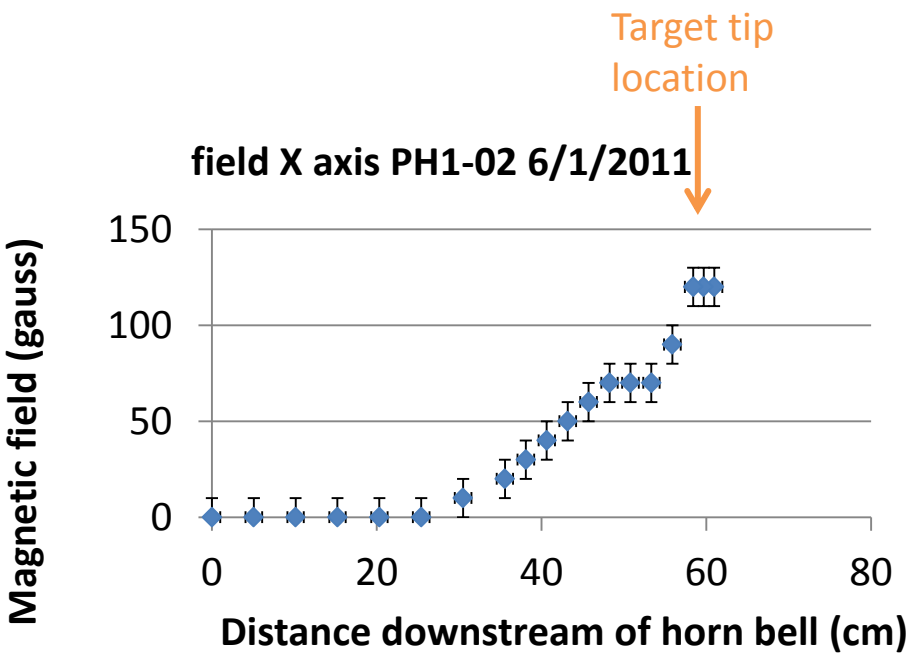


Modeling of field-target interaction indicated bigger coupling to Al shell, even though the steel cooling tubes are slightly magnetic.

Not enough information to model exactly, but indicated we had more than order of magnitude safety factor,

so did not replace horn

Maximum field 120 gauss
( 20,000 gauss inside horn )

At tip, a few times expected from test stand, but still small

# Horn conditioning - sparks

On last horn, had to gradually raise current - "condition" horn. Try to have pulses high enough to clean, but not high enough to do damage. Took about an hour.

On bolt-together upstream connection between inner and outer conductor, there is an outer lip that guides the two pieces together during assembly.

The silver-plated electrical connection is in-board of that.

Apparently, had to burn off rough ( nickel flakes? machining roughness?) unevenness of lip.

Plan to do something to prevent this on next horn (Have Anodize lip on next horn).

# Horn Strip-line modification for NOVA (700 kW) horn 1

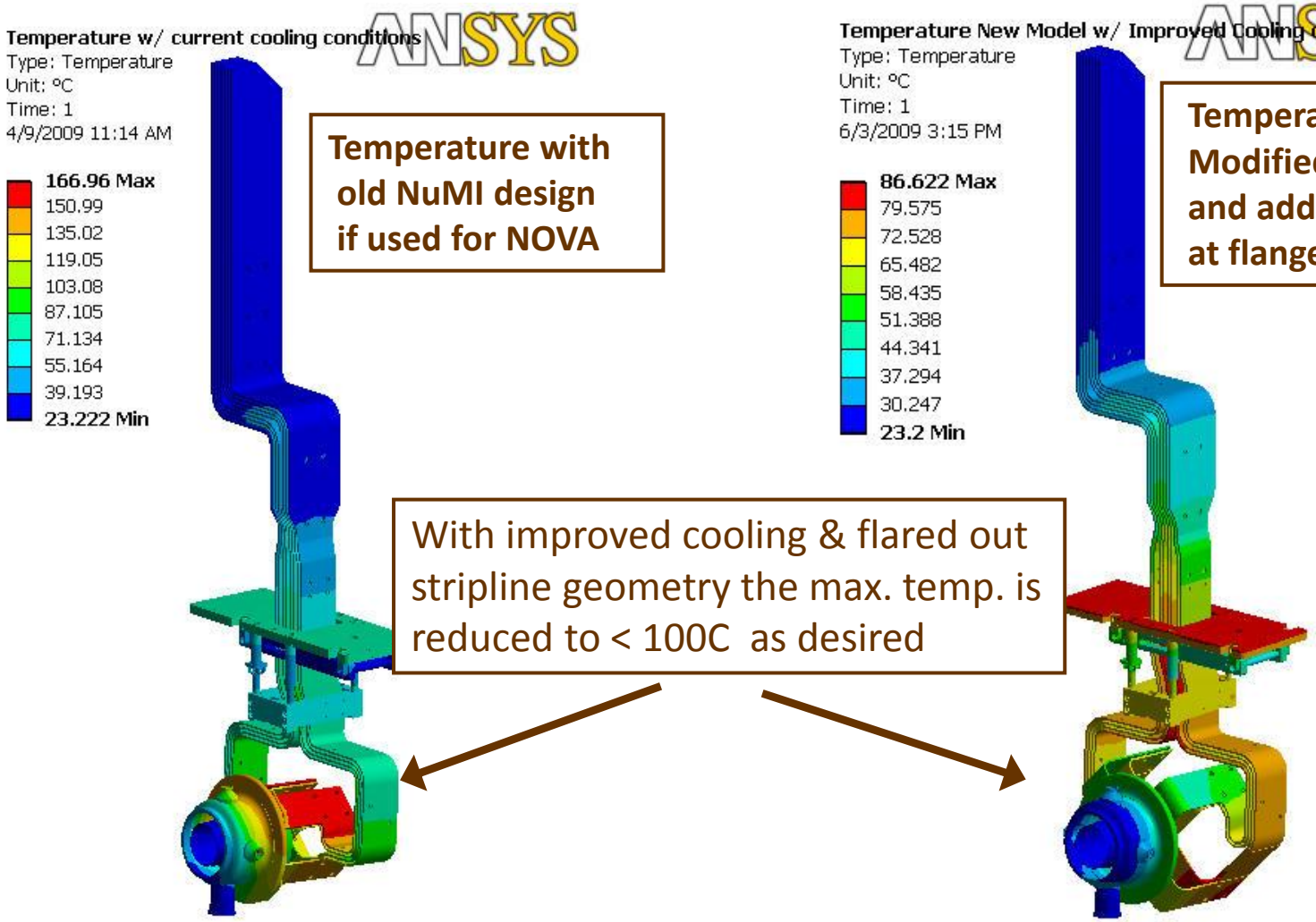


**Temperature with old NuMI design if used for NOVA**

**Temperature with Modified Geometry and added cooling at flange**

With improved cooling & flared out stripline geometry the max. temp. is reduced to < 100C as desired

# LBNE Reconfiguration – fall back to NuMI target & horns (for now)

Target end-on

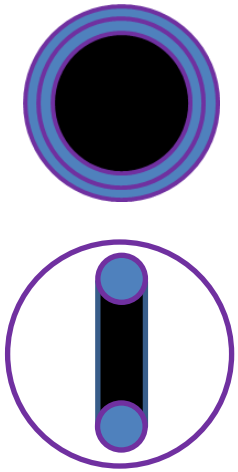

Previous LBNE Horn 1 Design

300 kA, 1 ms

Horn 2 Design

6.6 m

200 kA, 2.3 ms

Current LBNE Horn 1 Design

*Strip-lines moved to downstream end to maximize design carry-over from NuMI*

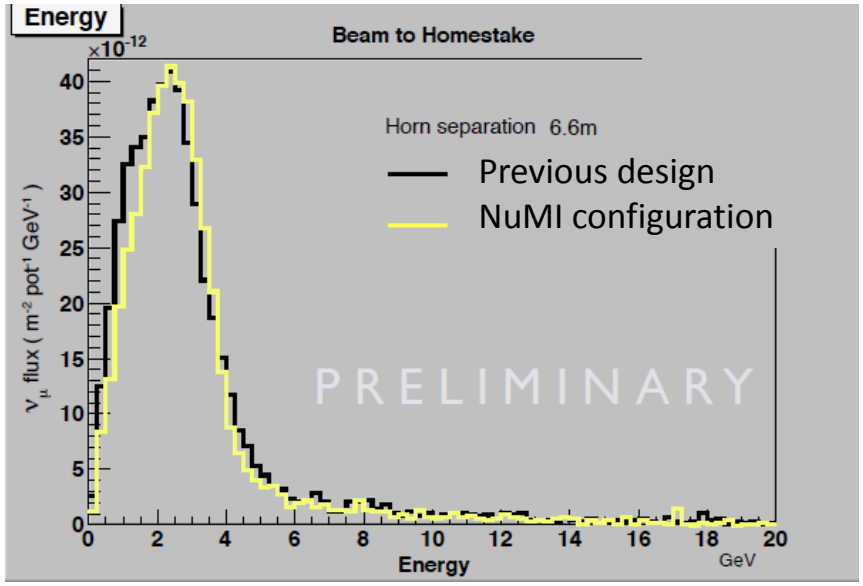


Save on design, prototyping
Can re-use NuMI power supply

**Re-gain flexibility of changing neutrino spectrum by moving target (systematics)**

20% Higher current would be better
- will study NuMI horn limit next year

# Beam energy deposition in NUMI horn 1 for LBNE

**Green** – with previous reference target using encapsulated graphite discs.

**Red** – with Reference Design target inserted into horn
(target like MINOS LE but with Titanium cooling lines and Beryllium outer tube).

**Blue** – with NOVA style target upstream of horn.

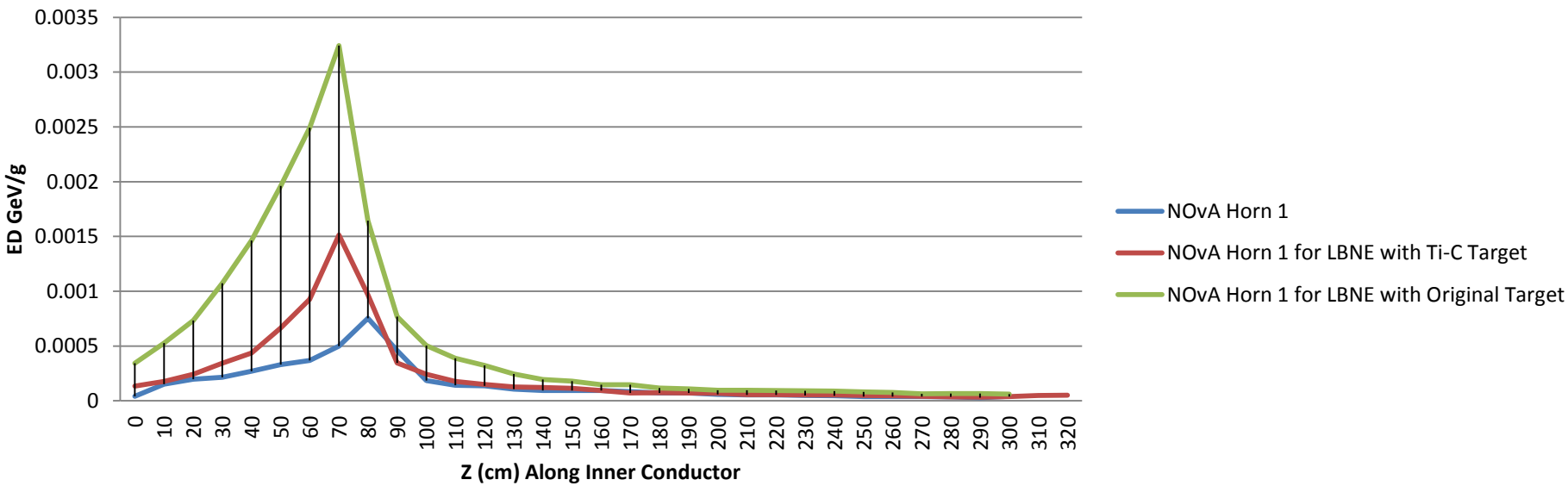


Energy deposition in neck region of horn was becoming problematic with encapsulated target *- switching back to NUMI-style fin eases this*

# Beam compared to Joule heating

| Unit (kW) | Horn1 | | Horn2 | |
|---|---|---|---|---|
| | IC | OC | IC | OC |
| Beam Heating Loads | 10 | 12.5 | 2.7 | 9.6 |
| Resistive Heating Loads | 9.1 | | 1.5 | |

| Beam Power to Target | 708 kW |
|---|---|
| Cycle time, T (s) | 1.33 |
| Beam Energy, GeV | 120 |
| Number protons per pulse, ppp | $4.9 \times 10^{13}$ |

| Pulse Parameters | |
|---|---|
| Horn peak current, I (kA) | 200 |
| Half-sine current pulse length, t (ms) | 2.1 |
| Cycle time, T (s) | 1.33 |

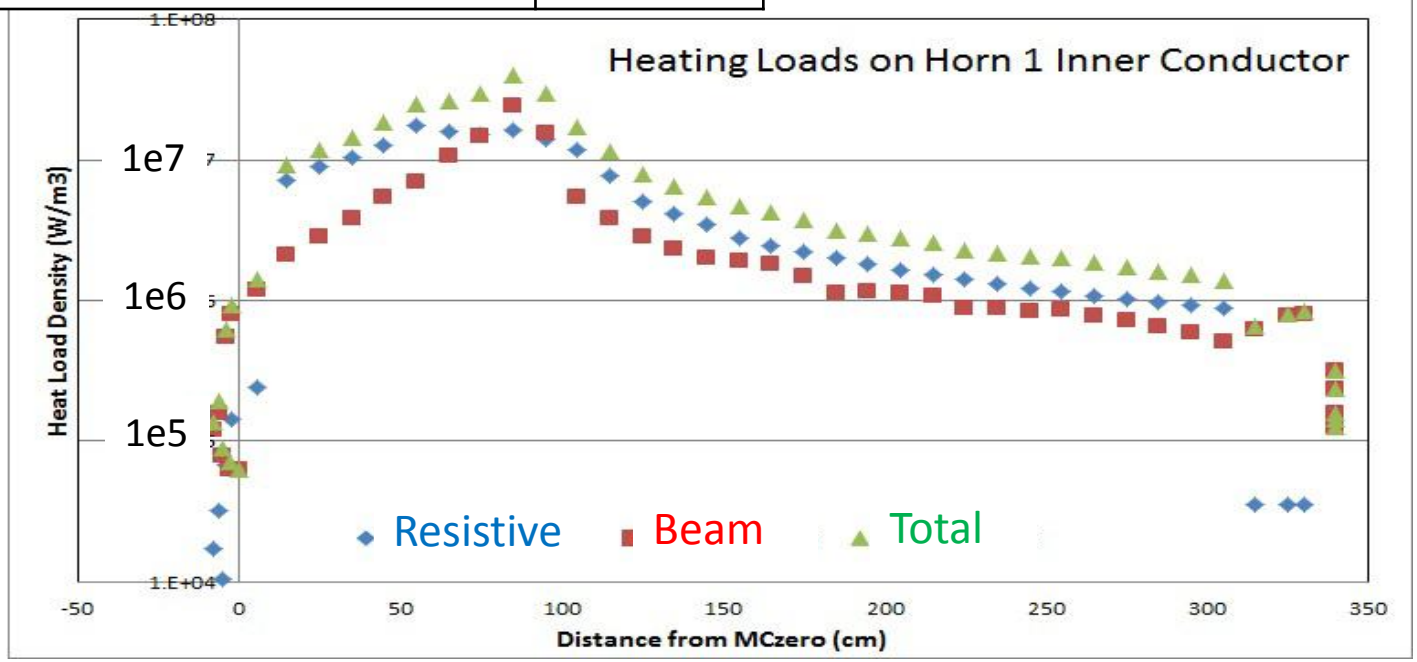

# LBNE Horn 1 Thermal Analysis

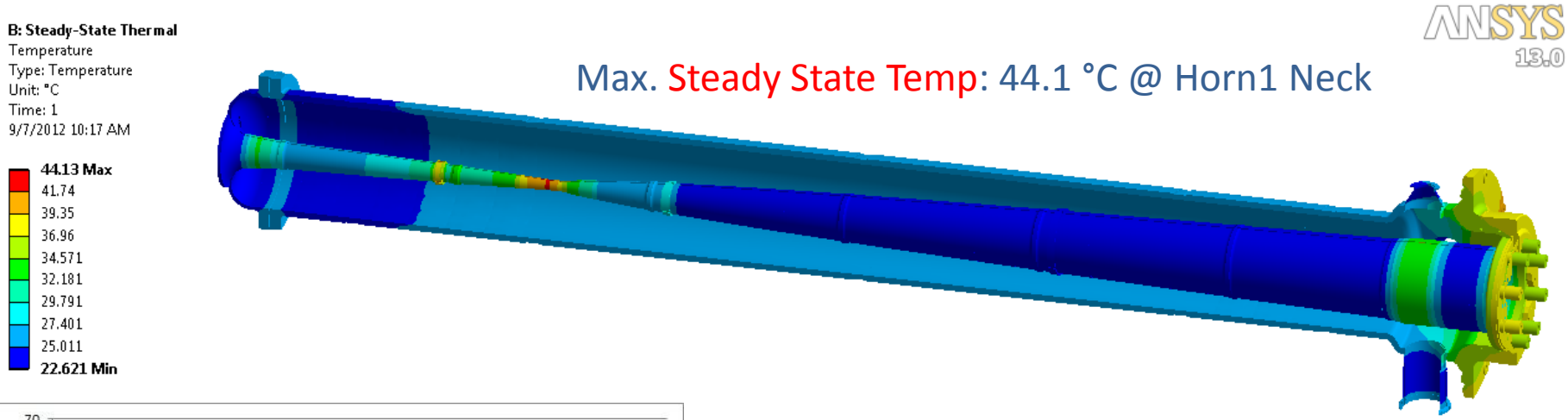


Max. Steady State Temp: 44.1 °C @ Horn1 Neck

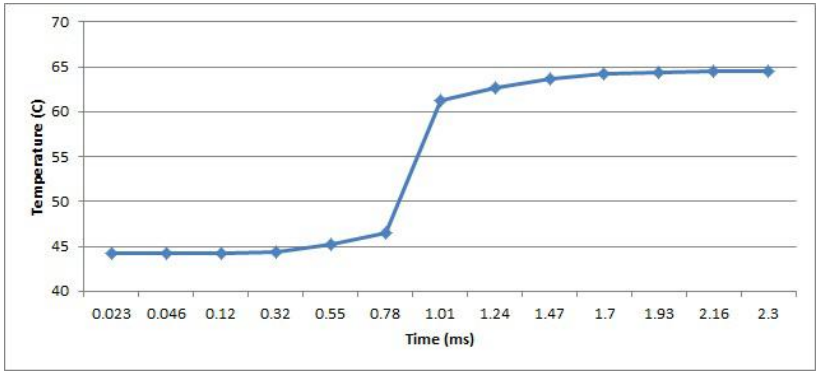


Temp Jump / Pulse: 20.4 ° C @ Horn1 Neck


Max. Transient Temp:

64.5 °C @ Horn1 Neck

Preliminary stress analysis also looks acceptable

Will make revisions to analysis after doing test cooling spray measurements next year